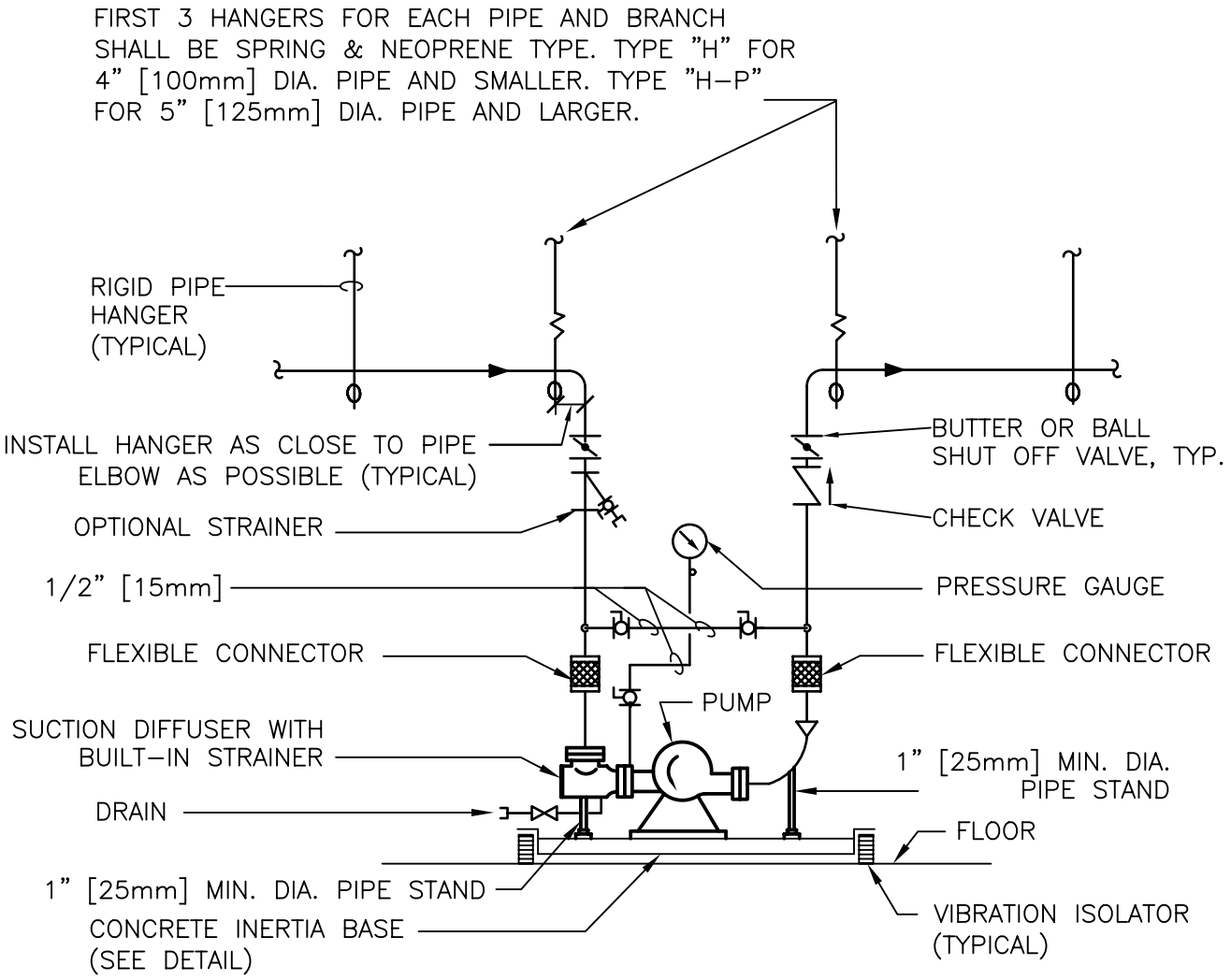

NOTE:
SEE SPECIFICATION SECTION "PUMPS" FOR Y STRAINER OPTION.

DESIGNER'S NOTE:
CHECK VALVE IS OPTIONAL FOR SINGLE PUMPS, EXCEPT FOR COOLING TOWER PUMP.

DOUBLE SUCTION FLOOR-MOUNTED PUMPS - CONNECTIONS WITH FLEXIBLE CONNECTORS

#

NTS

Department of Veterans Affairs

DETAIL TITLE / DOUBLE SUCTION FLOOR-MOUNTED PUMPS - CONNECTIONS WITH FLEXIBLE CONNECTORS

SCALE :NONE

DATE ISSUED :DECEMBER 2008

CADD DETAIL NO. : SD232123-04.DWG

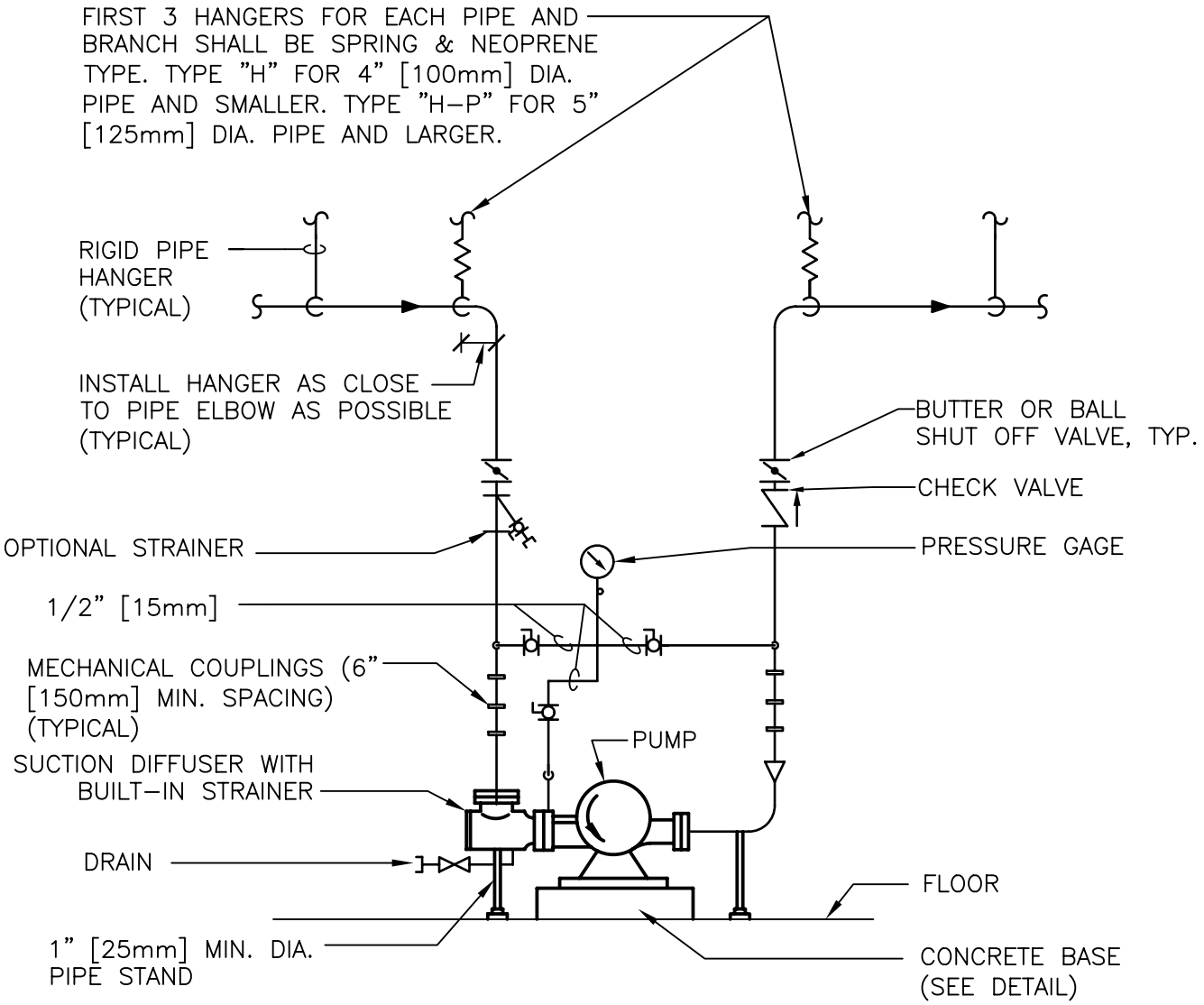

NOTES:
SEE SPECIFICATION SECTION "PUMPS" FOR Y STRAINER OPTION.

DOUBLE SUCTION FLOOR-MOUNTED PUMPS - CONNECTIONS WITH MECHANICAL COUPLINGS

#

NTS

DESIGNER'S NOTE:

1. CHECK VALVE IS OPTIONAL FOR SINGLE PUMP EXCEPT FOR COOLING TOWER PUMP. USE THIS DETAIL ONLY FOR PUMPS IN A MECHANICAL BUILDING WHERE POSSIBLE VIBRATION WILL NOT BE OBJECTIONABLE AND WHERE APPROVED BY VA.
2. COUPLINGS SHALL NOT BE USED IN HOT WATER APPLICATIONS.

Department of Veterans Affairs

DETAIL TITLE / DOUBLE SUCTION FLOOR-MOUNTED PUMPS - CONNECTIONS WITH MECHANICAL COUPLINGS

SCALE :NONE

DATE ISSUED :DECEMBER 2008 CADD DETAIL NO. : SD232123-05.DWG

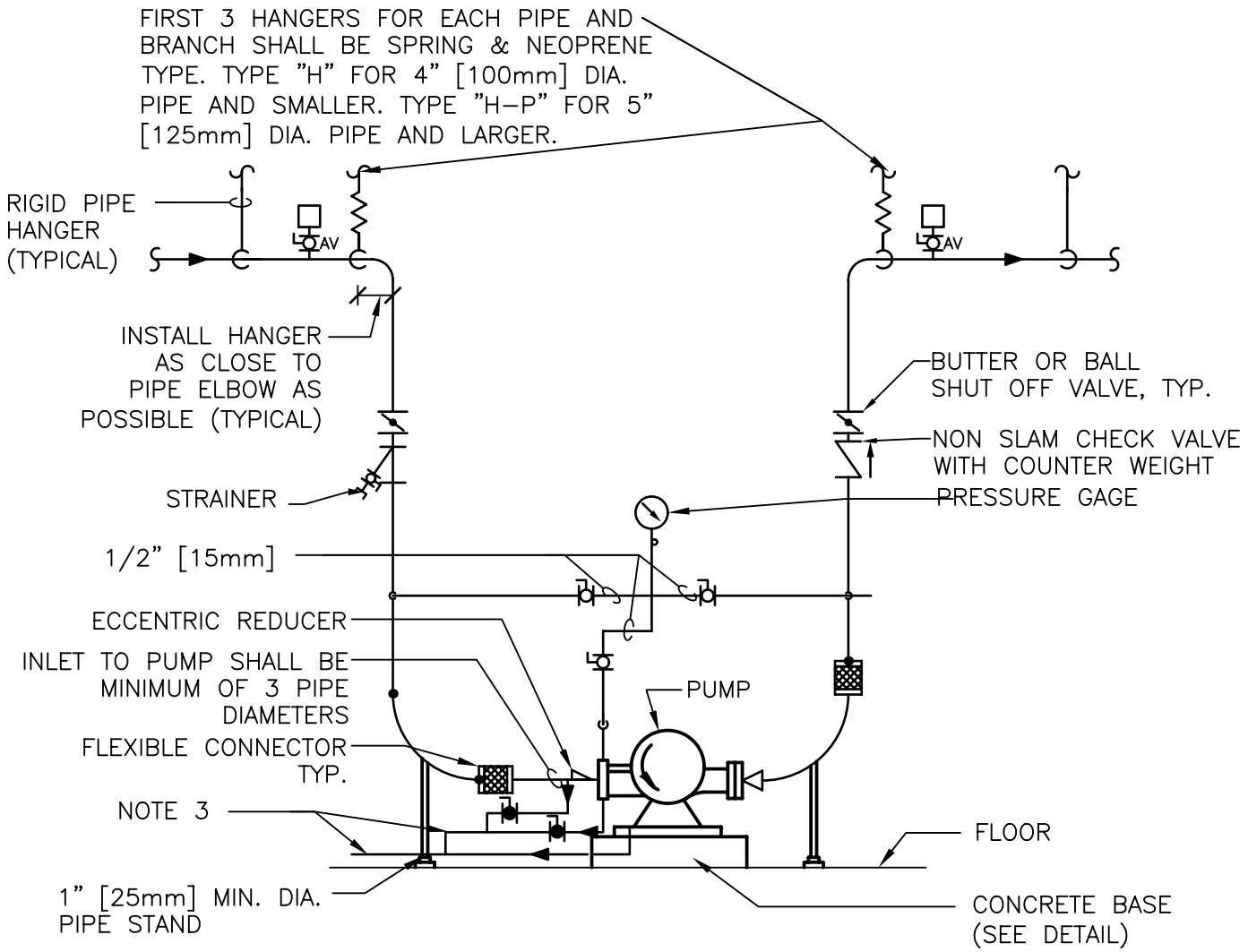

1. Y TYPE STRAINER BLOWDOWN HEIGHT SHALL ACCOMMODATE 55 GALLON DRUM.

2. PUMP INSTALLATION IS DIAGRAMMATIC AND INTENDED TO SHOW THE MAJOR COMPONENTS REQUIRED FOR INSTALLATION. THE INSTALLED PIPING CONFIGURATION SHALL BE BASED ON THE ACTUAL PUMP PROVIDED. THE CONTRACTOR SHALL SUBMIT FOR APPROVAL A COORDINATION DRAWING SHOWING PUMP, PIPING, AND ACCESSORIES AS REQUIRED BY THIS INSTALLATION DETAIL.

3. ALL PAD, PUMP, AND PIPING DRAINS SHALL BE HARD PIPED TO NEAREST FLOOR DRAIN, TYPICAL.

HORIZONTAL SPLIT CASE PUMP - FLEXIBLE CONNECTORS

#

NTS

DESIGNER'S NOTE:
CHECK VALVE IS OPTIONAL FOR SINGLE PUMP EXCEPT FOR COOLING TOWER PUMP. USE THIS DETAIL ONLY FOR PUMPS IN A MECHANICAL BUILDING WHERE POSSIBLE VIBRATION WILL NOT BE OBJECTIONABLE OR WHERE APPROVED BY VA.

Department of Veterans Affairs

DETAIL TITLE / HORIZONTAL SPLIT CASE PUMP - FLEXIBLE CONNECTORS

SCALE :NONE

DATE ISSUED :DECEMBER 2008 CADD DETAIL NO. : SD232123-06.DWG

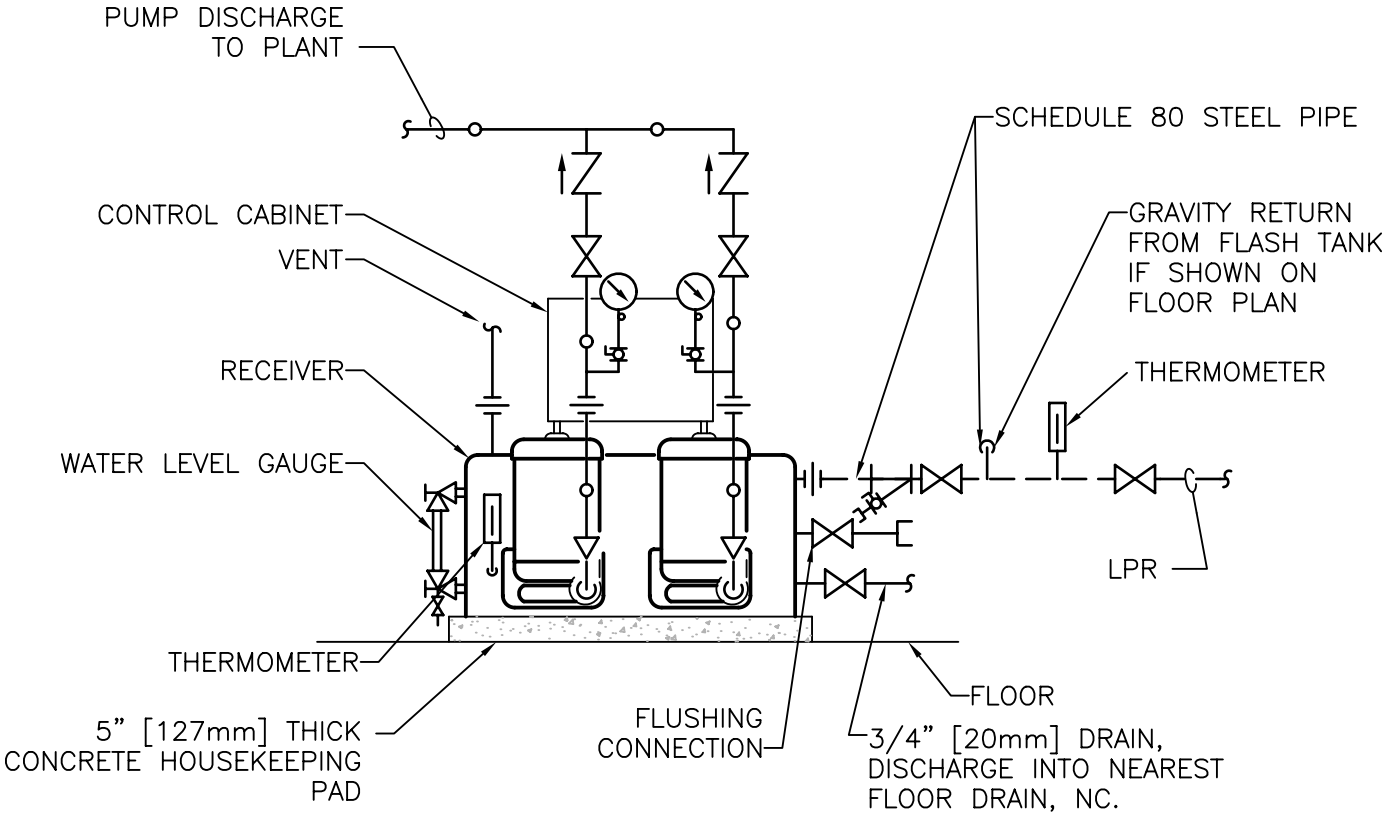

CONDENSATE PUMPS - PIPING CONNECTIONS

#

NTS

Department of Veterans Affairs

DETAIL TITLE / CONDENSATE PUMPS - PIPING CONNECTIONS

SCALE :NONE

DATE ISSUED :DECEMBER 2008

CADD DETAIL NO. : SD232123-07.DWG

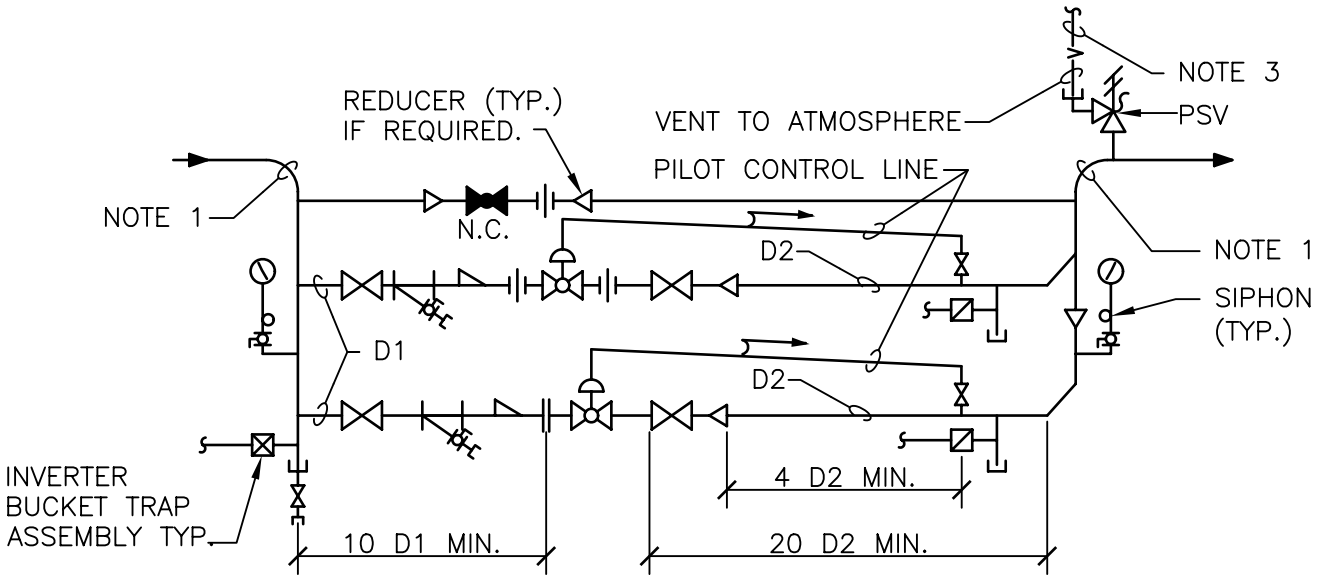

NOTE:

1. SEE FLOOR PLANS FOR PIPE SIZES.
2. SEE EQUIPMENT SCHEDULES FOR VALVE DATA AND PIPE SIZES D1 AND D2. INSTALL VALVES AS RECOMMENDED BY MANUFACTURER.
3. MAKE BYPASS VALVE DISCHARGE PIPE THE SAME SIZE AS D2 FOR THE LARGEST PRV.
4. PROVIDE NECESSARY UNIONS FOR THE REMOVAL OF VALVE WITH SCREWED CONNECTIONS.

STEAM PRESSURE REDUCING STATION DOUBLE VALVE (1/3 AND 2/3)

1

NTS

DESIGNER'S NOTES:

1. DESIGNATE LOWER VALVE A AND UPPER VALVE B (1–PRV1A, 1–PRV1B). USE SYSTEM PRESSURE FOR 1–PRV1A AND SET PRESSURE 2 PSIG [13.8kPa] HIGHER
2. USE DUAL VALVE PRESSURE REDUCING STATION WHEN THE MINIMUM LOAD IS 10% OR LESS THAN PEAK LOAD.
3. SAFETY VALVES SHALL BE SIZED SO AS TO RELIEVE AT PRESSURES OF 5–10 PSIG [35–70kPa] IN EXCESS OF DELIVERED PRESSURES OF PRV'S AND TO HAVE A CAPACITY EQUAL TO THE MAXIMUM CAPACITY OF PRV IT IS TO RELIEVE. VENT PIPE SHALL BE NO LESS THAN ONE PIPE SIZE LARGER THAN SAFETY VALVE DISCHARGE AND SHALL FURTHER BE SIZED SO THAT FRICTIONAL RESISTANCE OR VENT DOES NOT EXCEED VELOCITY PRESSURE AT SAFETY VALVE OUTLET. VENTS FROM SAFETY VALVES SHALL RUN THE SHORTEST AND MOST DIRECT ROUTE TO OUTDOOR THRU THE ROOF. WHERE VENTS RUN IN FINISHED SPACE THEY SHALL BE FURRED IN TO MATCH ADJACENT BUILDING CONSTRUCTION; IN UNFINISHED SPACE, PIPE TO BE COVERED ONLY. SAFETY VALVES SHALL BE LOCATED AS SHOWN ON THE FLOOR PLANS.

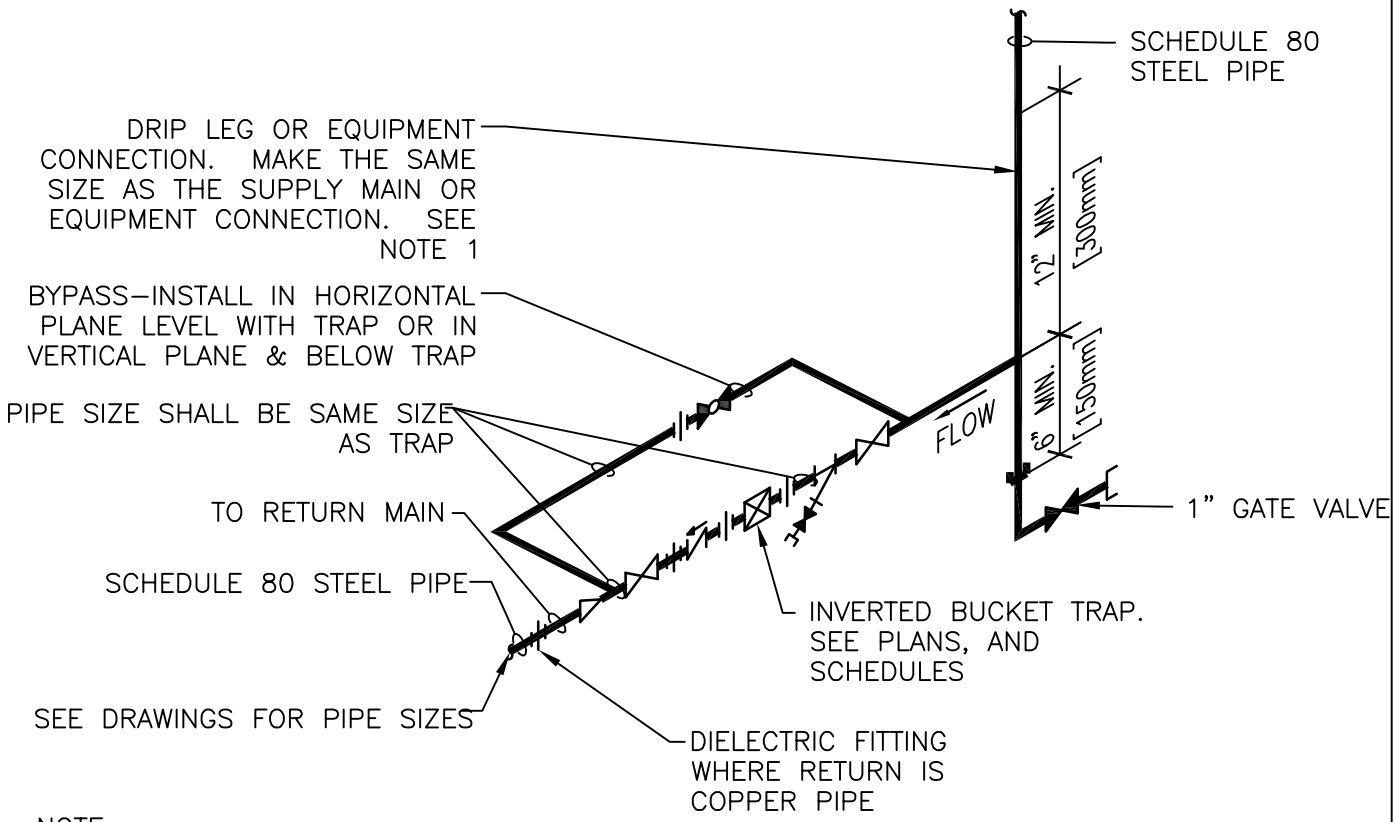

NOTE:

1. ALL DRIP POINTS ON STEAM MAINS SHALL BE PROVIDED WITH A 12" MINIMUM HIGH DRIP LEG FROM BOTTOM OF STEAM MAIN TO TRAP INLET. DRIP LEG SHALL HAVE 6" SCALE POCKET BELOW TRAP INLET.

2. PROVIDE BYPASS PIPING.

INVERTED BUCKET STEAM TRAP ASSEMBLY

#

NTS

Department of Veterans Affairs

DETAIL TITLE / INVERTED BUCKET STEAM TRAP ASSEMBLY

SCALE :NONE

DATE ISSUED: DECEMBER 2008 CAD DETAIL NO.: SD232213–02.DWG

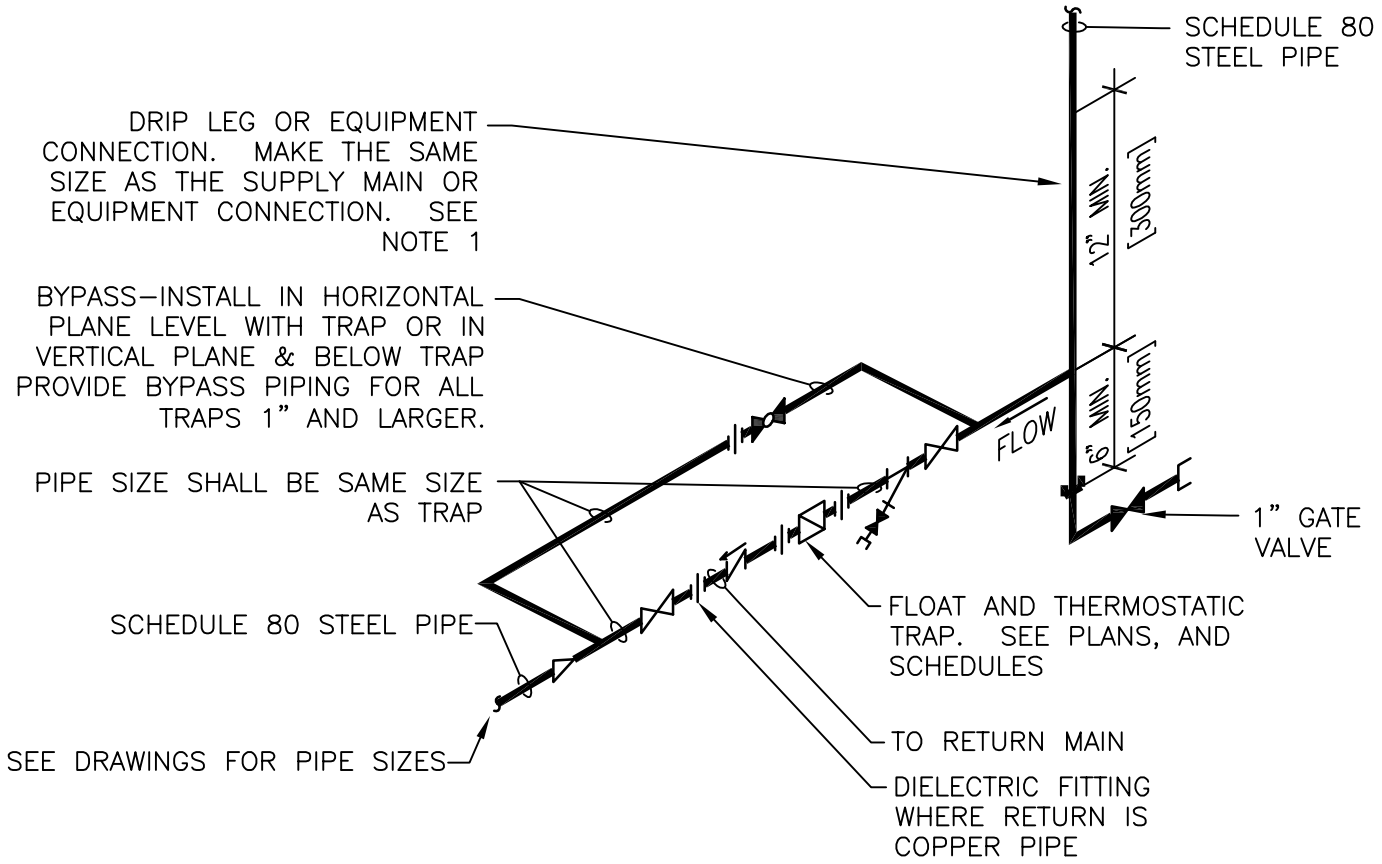

NOTE:

1. ALL DRIP POINTS ON STEAM MAINS SHALL BE PROVIDED WITH A 12" MINIMUM HIGH DRIP LEG FROM BOTTOM OF STEAM MAIN TO TRAP INLET. DRIP LEG SHALL HAVE 6" SCALE POCKET BELOW TRAP INLET.

FLOAT AND THERMOSTATIC STEAM TRAP ASSEMBLY

#

NTS

Department of Veterans Affairs

DETAIL TITLE / FLOAT AND THERMOSTATIC STEAM TRAP ASSEMBLY

SCALE :NONE

DATE ISSUED: DECEMBER 2008 CAD DETAIL NO.: SD232213–03.DWG

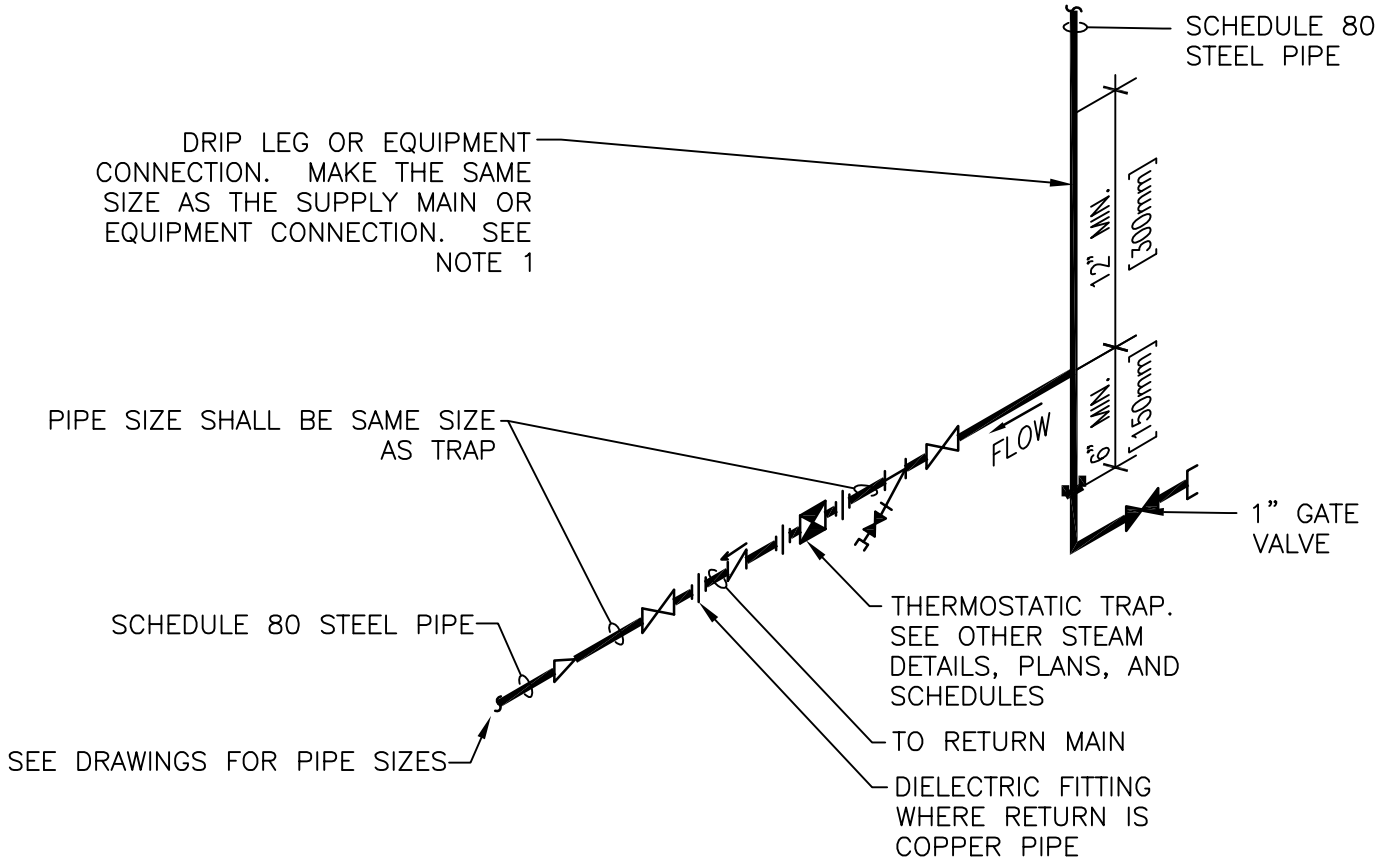

NOTE:

1. ALL DRIP POINTS ON STEAM MAINS SHALL BE PROVIDED WITH A 12" MINIMUM HIGH DRIP LEG FROM BOTTOM OF STEAM MAIN TO TRAP INLET. DRIP LEG SHALL HAVE 6" SCALE POCKET BELOW TRAP INLET.

THERMOSTATIC STEAM TRAP ASSEMBLY

#

NTS

Department of Veterans Affairs

DETAIL TITLE / THERMOSTATIC STEAM TRAP ASSEMBLY

SCALE :NONE

DATE ISSUED: DECEMBER 2008 CAD DETAIL NO.: S232213-04.DWG

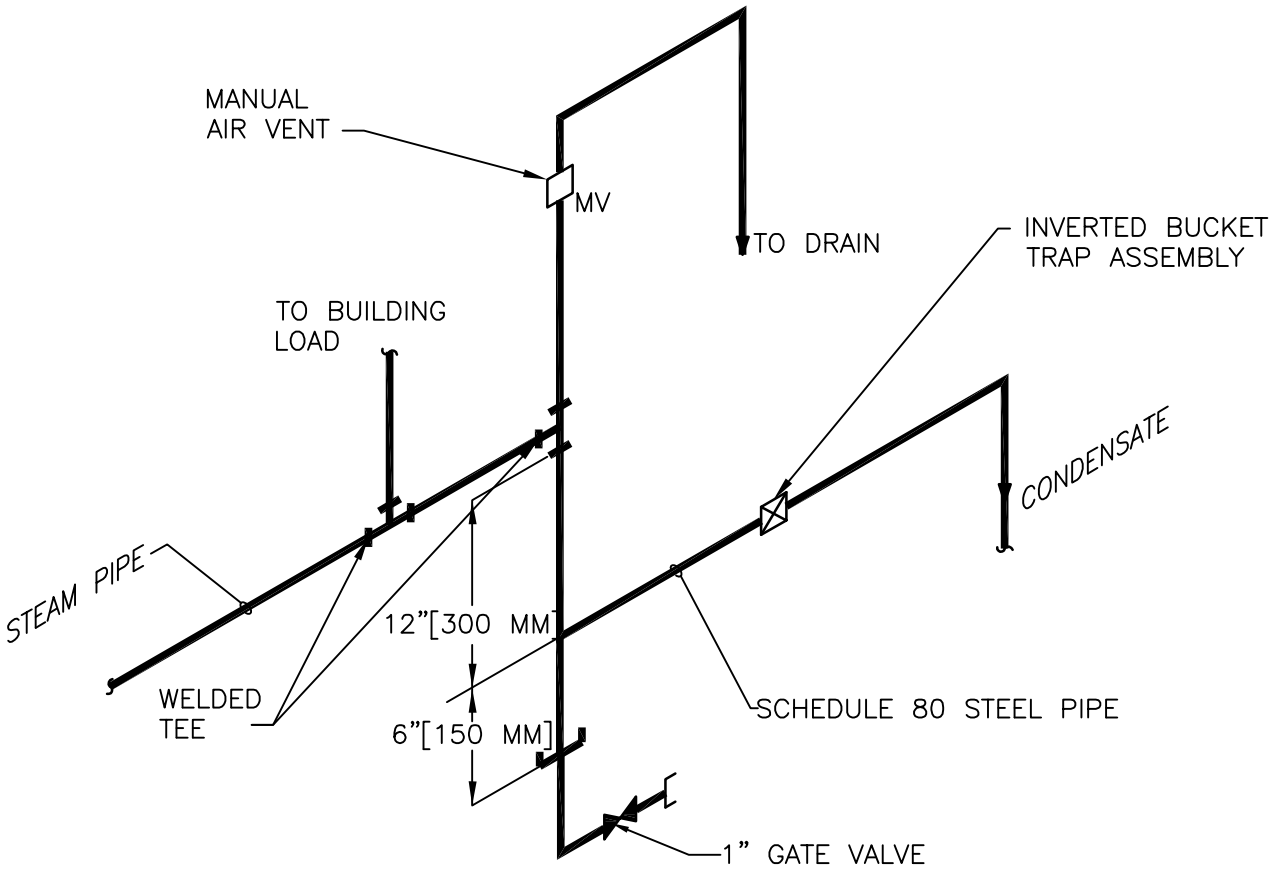

END OF STEAM LINE DRIP TRAP

#

NTS

Department of Veterans Affairs

DETAIL TITLE / END OF STEAM LINE DRIP TRAP

SCALE :NONE

DATE ISSUED: DECEMBER 2008 CAD DETAIL NO.: SD232213-05.DWG

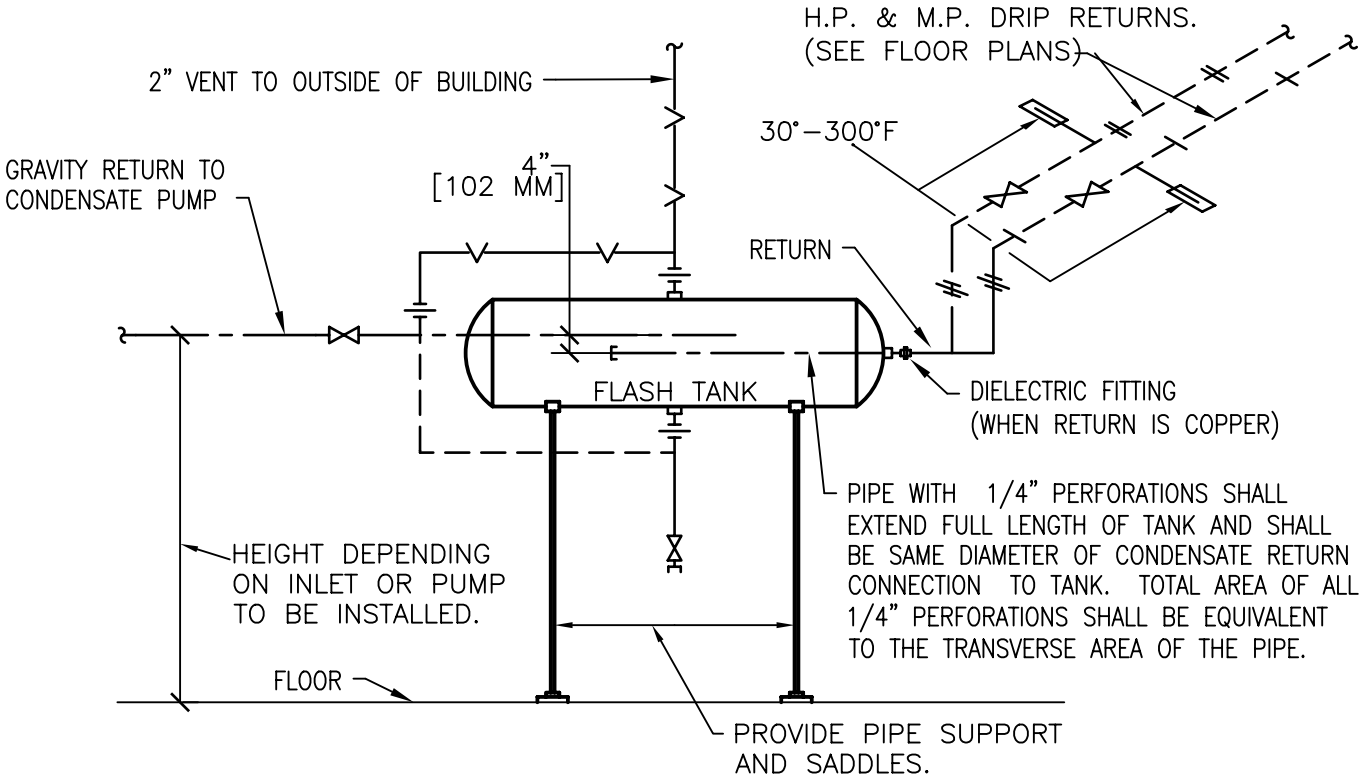

FLASH TANK SCHEDULE		
CONDENSATE PUMP CAPACITY– GPM	APPROX. CAPACITY OF FLASH TANK– GALLONS	SIZE OF FLASH TANK– INCHES
0 THRU 15	16	14 DIA. X 24 LONG
16 " 22	24	14 DIA. X 36 LONG
23 " 30	31	16 DIA. X 36 LONG
31 " 37	37	16 DIA. X 42 LONG
38 " 45	42	16 DIA. X 48 LONG
46 " 60	61	18 DIA. X 54 LONG
61 " 75	75	18 DIA. X 66 LONG
76 " 97	95	24 DIA. X 54 LONG
98 " 150	155	24 DIA. X 78 LONG

TYPICAL CONNECTIONS TO FLASH TANK

NTS

DESIGNER'S NOTE:

INDICATE THE HEIGHT ON FLOOR PLANS AND/OR SECTIONS.
PROVIDE A FLASH TANK FOR EACH CONDENSATE PUMP, WHICH SERVES MPR OR HPR CONDENSATE.

Department of Veterans Affairs

DETAIL TITLE / TYPICAL CONNECTIONS TO FLASH TANK

SCALE :NONE

DATE ISSUED: DECEMBER 2008 CAD DETAIL NO.: SD232213–06.DWG

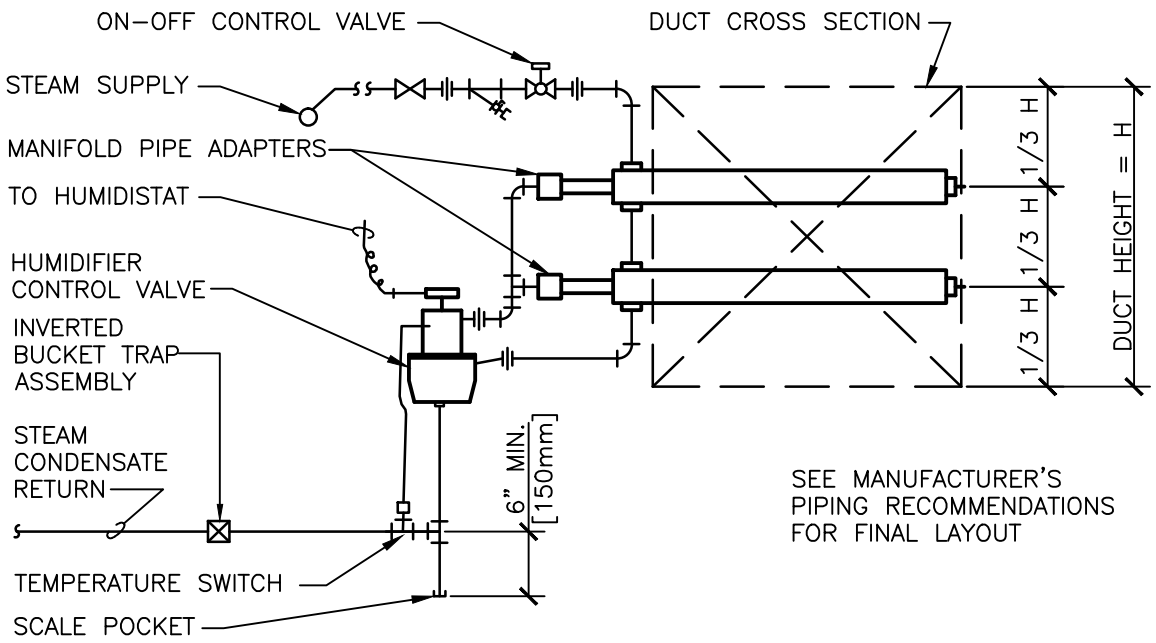

STEAM HUMIDIFIER – PIPING CONNECTIONS (MULTIPLE DISPERSION TUBES)

#

NTS

Department of Veterans Affairs

DETAIL TITLE / STEAM HUMIDIFIER – PIPING CONNECTIONS (MULTIPLE DISPERSION TUBES)

SCALE :NONE

DATE ISSUED: MARCH 2010 CAD DETAIL NO.: SD232213–07.DWG

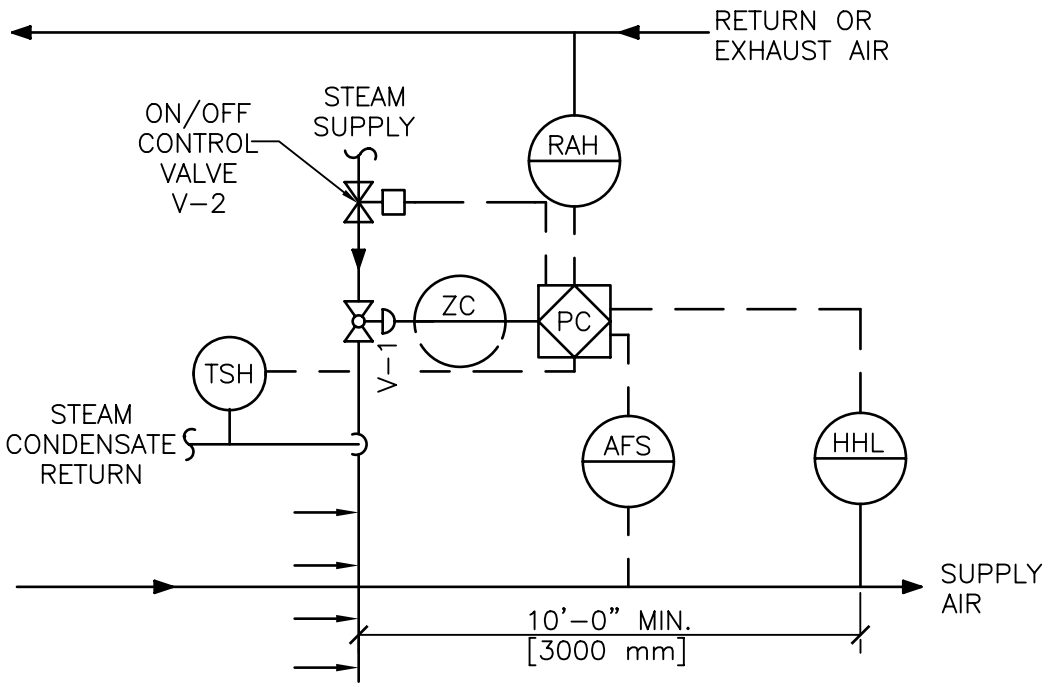

STEAM HUMIDIFIER

RETURN (OR EXHAUST) AIR HUMIDITY SHALL BE MONITORED. ON A CALL FOR HUMIDIFICATION, HUMIDIFIER VALVE V-1 SHALL MODULATE TO MAINTAIN THE RETURN (OR EXHAUST) AIR HUMIDITY SET POINT TO 30% (ADJUSTABLE). PRIOR TO ACTIVATION OF V-1, THE ON/OFF CONTROL VALVE V-2 SHALL BE ENABLED THROUGH ECC AND JACKET TEMPERATURE SENSED BY TSH SHALL BE WARM ENOUGH TO PREVENT CONDENSATION. THE HIGH LIMIT HUMIDITY SENSOR, LOCATED IN THE SUPPLY AIR DUCT 10 FEET AWAY FROM THE HUMIDIFIER SHALL DISABLE THE HUMIDIFIER AND GIVE AN ALARM SIGNAL TO THE ECC, IF THE SUPPLY AIR HUMIDITY EXCEEDS 90% RH (ADJUSTABLE). THE AIRFLOW SWITCH SHALL PROVE AIRFLOW BEFORE HUMIDITY CONTROLS ARE ACTIVATED.

STEAM HUMIDIFIER CONTROLS

#

NTS

Department of Veterans Affairs

DETAIL TITLE / STEAM HUMIDIFIER CONTROLS

SCALE :NONE

DATE ISSUED :DECEMBER 2008

CADD DETAIL NO. : SD232213-08.DWG

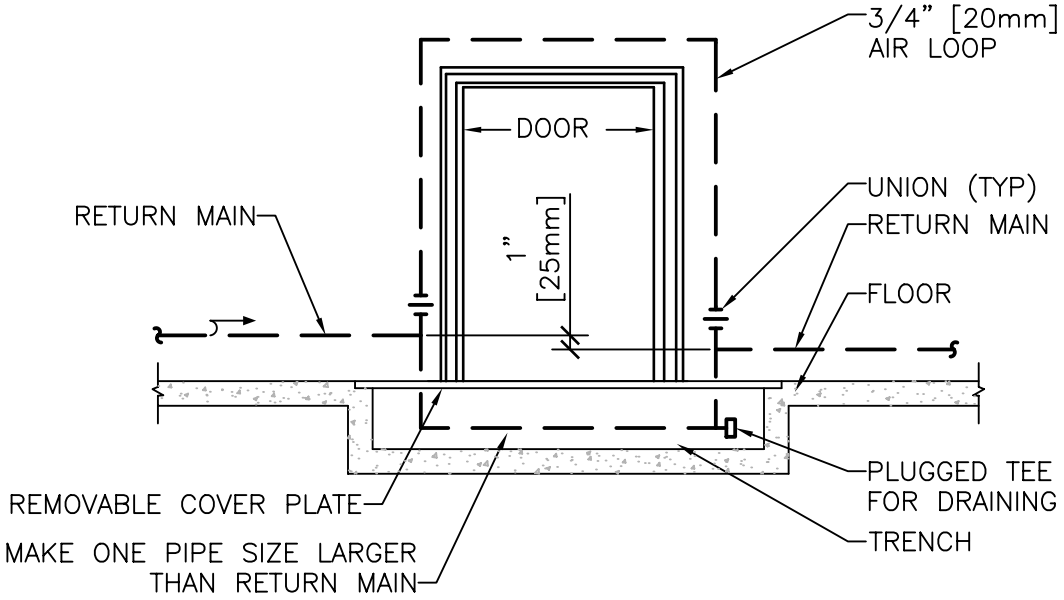

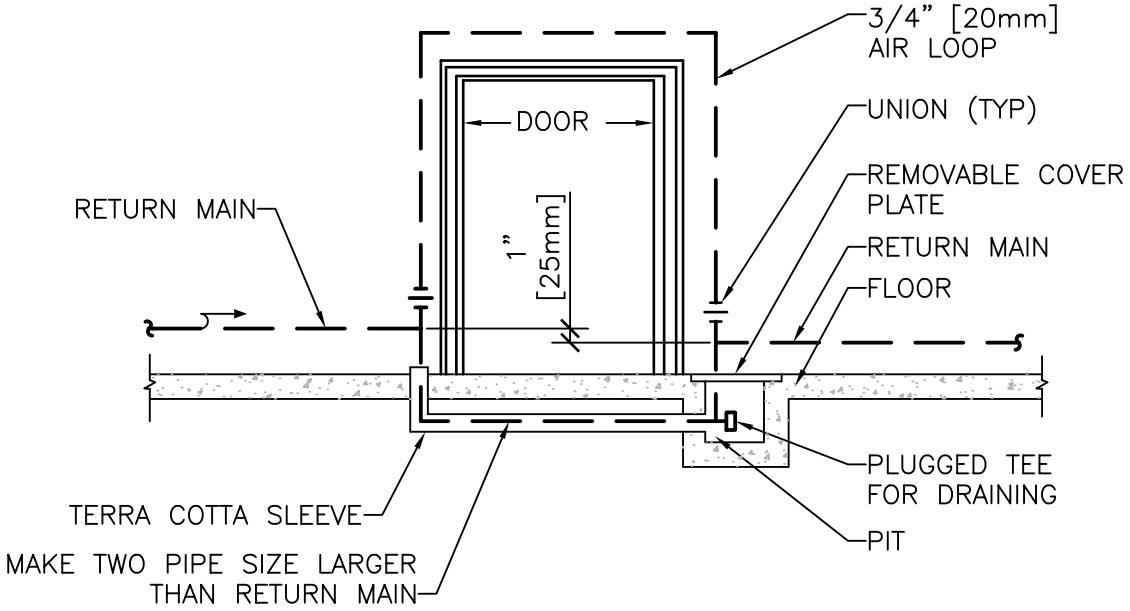

CONDENSATE RETURN PIPING AROUND OPENINGS

#

NTS

Department of Veterans Affairs

DETAIL TITLE / CONDENSATE RETURN PIPING AROUND OPENINGS

SCALE :NONE

DATE ISSUED :DECEMBER 2008

CADD DETAIL NO. : SD232213-09.DWG

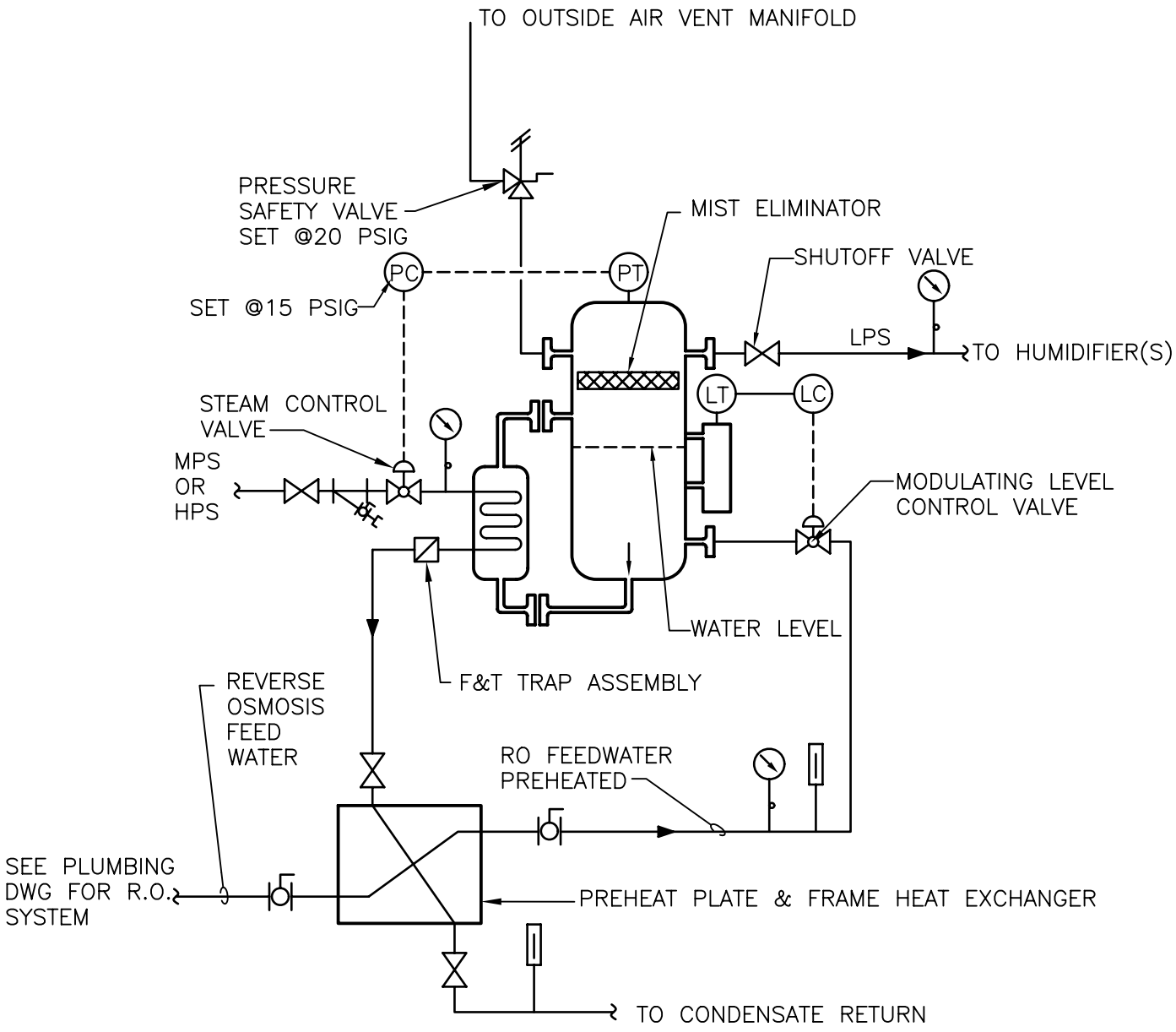

CLEAN STEAM GENERATOR

#

NTS

DESIGNER NOTES:
1.PREHEAT HEAT EXCHANGER IS OPTIONAL.

Department of Veterans Affairs

DETAIL TITLE / CLEAN STEAM GENERATOR

SCALE :NONE

DATE ISSUED: DECEMBER 2008 CAD DETAIL NO.: SD232213-10.DWG

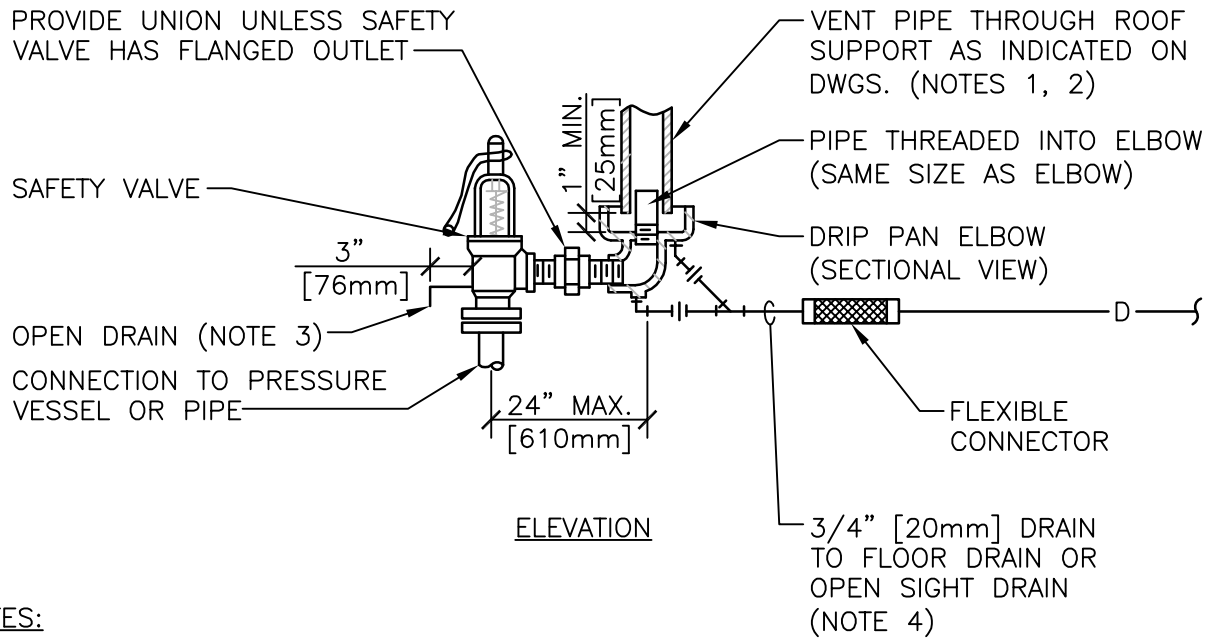

ELEVATION

NOTES:

1. UNLESS OTHERWISE SHOWN ON THE DRAWINGS, SIZE THE VENT PIPE SO THAT STEAM IS NOT BLOWN OUT AT THE VENT PIPE ENTRANCE. UTILIZE THE CALCULATION METHOD CONTAINED IN ANSI B31.1. POWER PIPING CODE, APPENDIX II.
2. VENT PIPE SHALL TERMINATE 6' [1829mm] MIN. ABOVE FINISHED ROOF.
3. DISCHARGE OF DRAIN MUST BE DIRECTED AWAY FROM PLATFORMS OR OTHER AREAS WHICH PERSONNEL MAY OCCUPY.
4. DO NOT CONNECT ANY OTHER DRAIN TO THE DRIP PAN ELBOW DRAIN PIPE.

STEAM SAFETY VALVE

NTS

Department of Veterans Affairs

DETAIL TITLE / STEAM SAFETY VALVE

SCALE :NONE

DATE ISSUED: DECEMBER 2008 CAD DETAIL NO.: SD232213-11.DWG

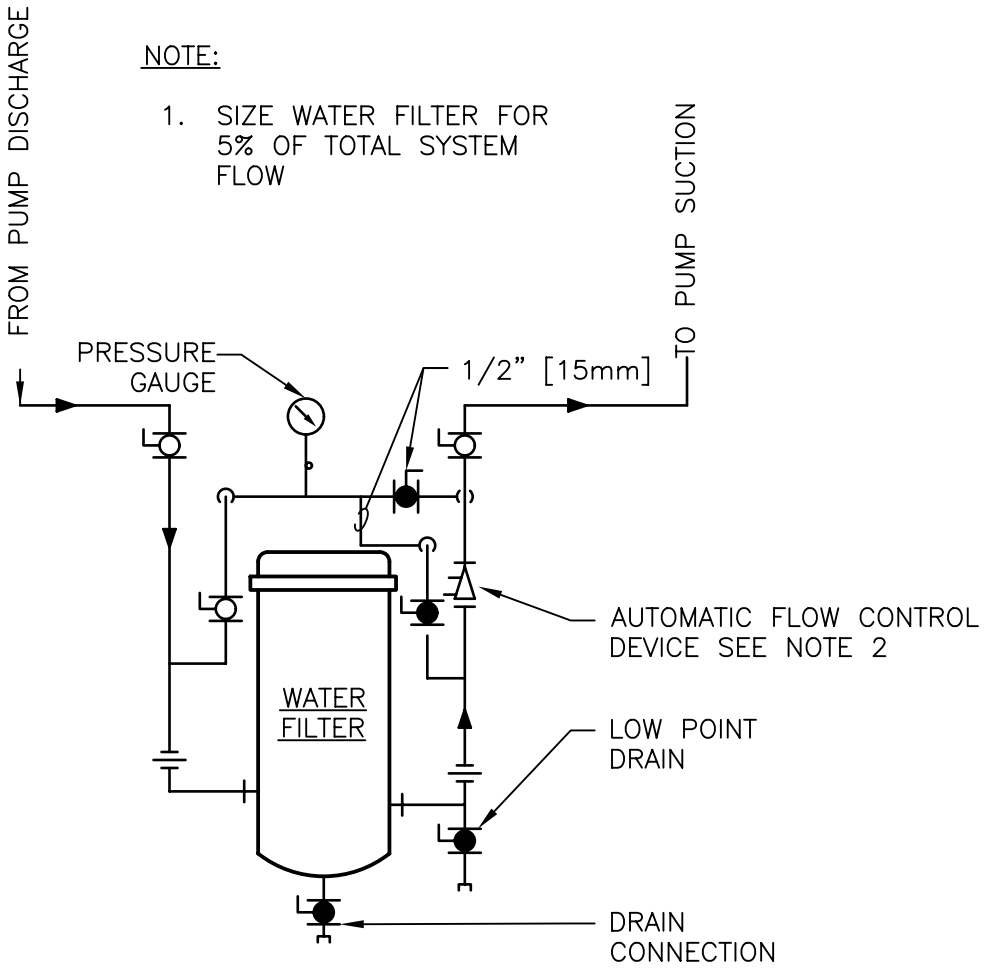

WATER FILTERS - CLOSED LOOP HYDRONIC SYSTEMS

#

NTS

DESIGNER'S NOTE:

1. PROVIDE SEDIMENT WATER FILTER ON EACH CHILLED WATER, HOT WATER AND GLYCOL WATER HEATING SYSTEM. CAPACITY SHALL BE APPROXIMATELY 5% OF THE TOTAL CIRCULATING FLOW. SHOW FILTER LOCATIONS ON THE DRAWINGS. INCLUDE THE FILTER FLOW RATE IN PUMP CAPACITIES. SIZE PIPES TO WATER FILTER.
2. SELECT PRESSURE RANGE PER PROJECT NEED. SPECIFY PRESSURE RANGE ON DRAWINGS.

Department of Veterans Affairs

DETAIL TITLE / WATER FILTERS - CLOSED LOOP HYDRONIC SYSTEMS

SCALE :NONE

DATE ISSUED: DECEMBER 2008 CAD DETAIL NO.: SD232500-01.DWG

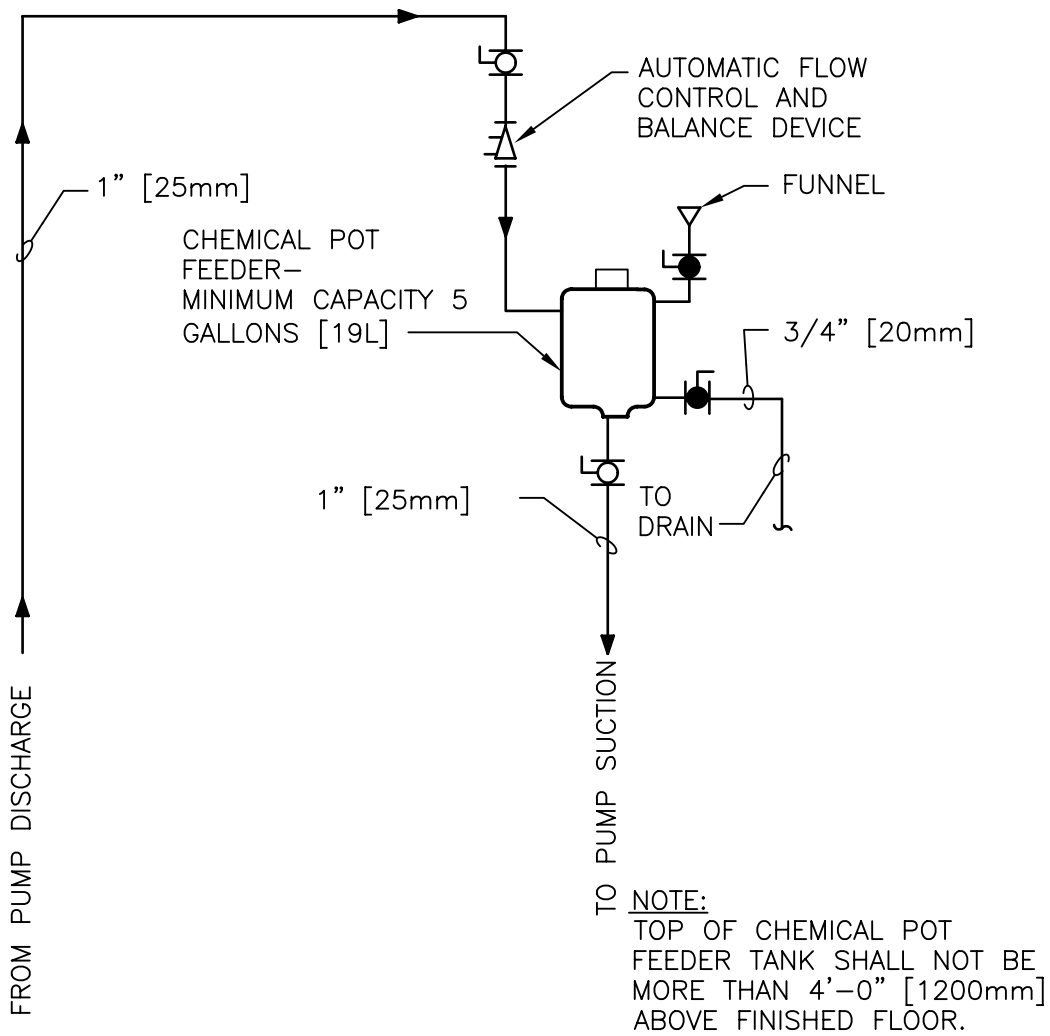

WATER TREATMENT - CLOSED SYSTEMS

#

NTS

DESIGNER'S NOTE:

1. SHOW LOCATION OF ALL CHEMICAL POT FEEDER TANKS ON PIPING DIAGRAMS FOR EACH CHILLED WATER AND HEATING HOT WATER SYSTEM. FEEDER MAY ALSO BE USED FOR MAKE–UP FOR SMALL GLYCOL–WATER SYSTEMS (UNDER 50 GPM [190 LPM] IN LIEU OF A TANK/PUMP MAKE–UP SYSTEM.

Department of Veterans Affairs

DETAIL TITLE / WATER TREATMENT – CLOSED SYSTEMS

SCALE :NONE

DATE ISSUED: DECEMBER 2008 CAD DETAIL NO.: SD232500–02.DWG

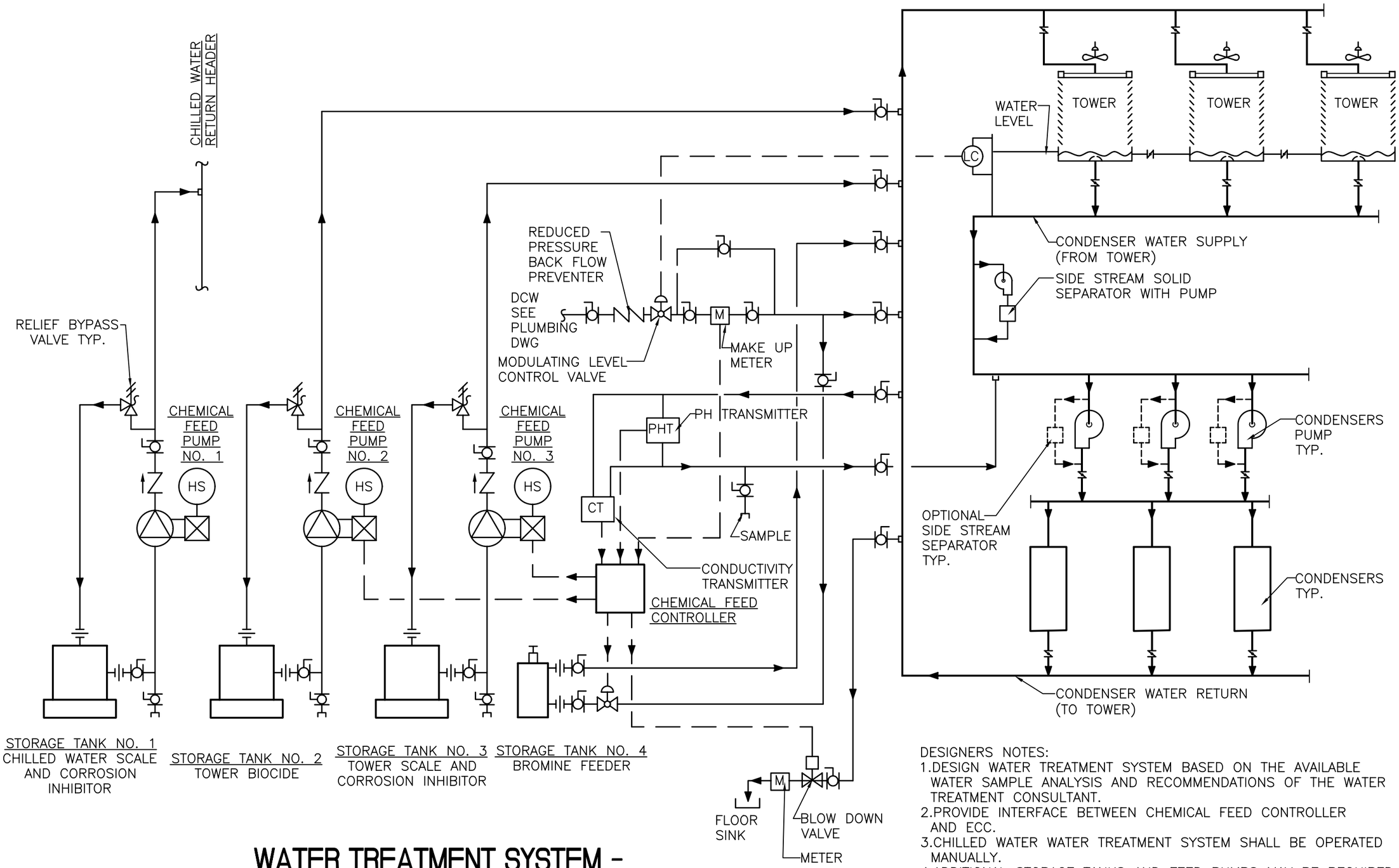

WATER TREATMENT SYSTEM - COOLING TOWER

#

NTS

DESIGNERS NOTES:

1. DESIGN WATER TREATMENT SYSTEM BASED ON THE AVAILABLE WATER SAMPLE ANALYSIS AND RECOMMENDATIONS OF THE WATER TREATMENT CONSULTANT.
2. PROVIDE INTERFACE BETWEEN CHEMICAL FEED CONTROLLER AND ECC.
3. CHILLED WATER WATER TREATMENT SYSTEM SHALL BE OPERATED MANUALLY.
4. ADDITIONAL STORAGE TANKS AND FEED PUMPS MAY BE REQUIRED BASED ON THE OUTCOME OF THE WATER SAMPLE ANALYSIS.
5. ENSURE CLOSE COORDINATION BETWEEN THE CONTRACT SPECIFICATIONS AND DETAILS.

DETAIL TITLE / WATER TREATMENT SYSTEM - COOLING TOWER

SCALE :NONE

DATE ISSUED: DECEMBER 2008

CAD DETAIL NO.: SD232500-03.DWG

Department of Veterans Affairs

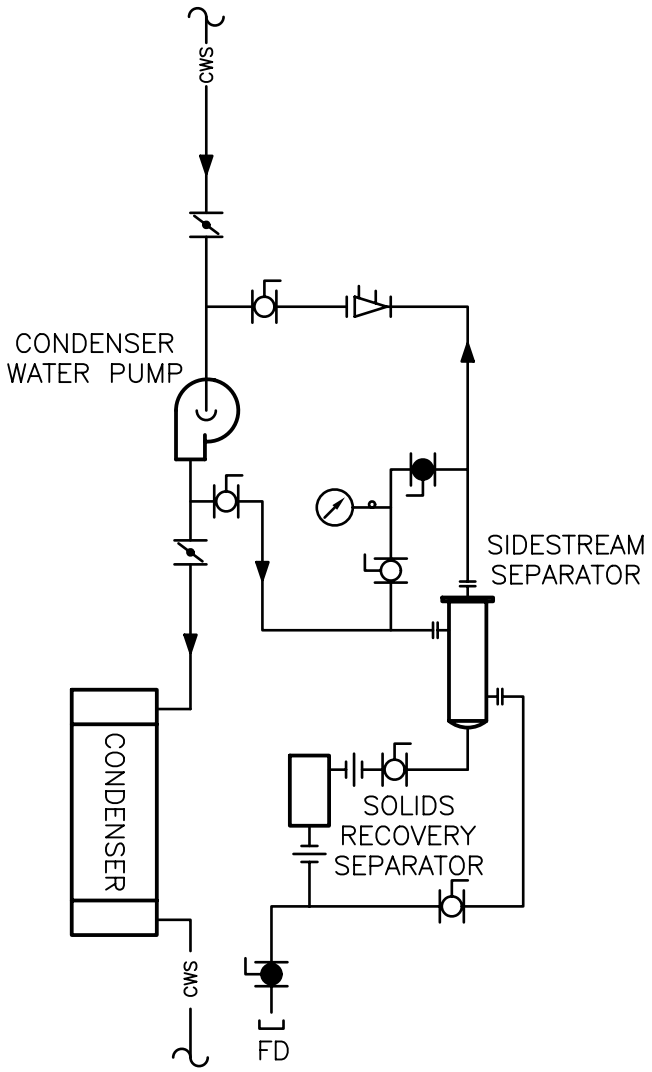

SEPARATOR DETAIL WITHOUT SIDESTREAM PUMP

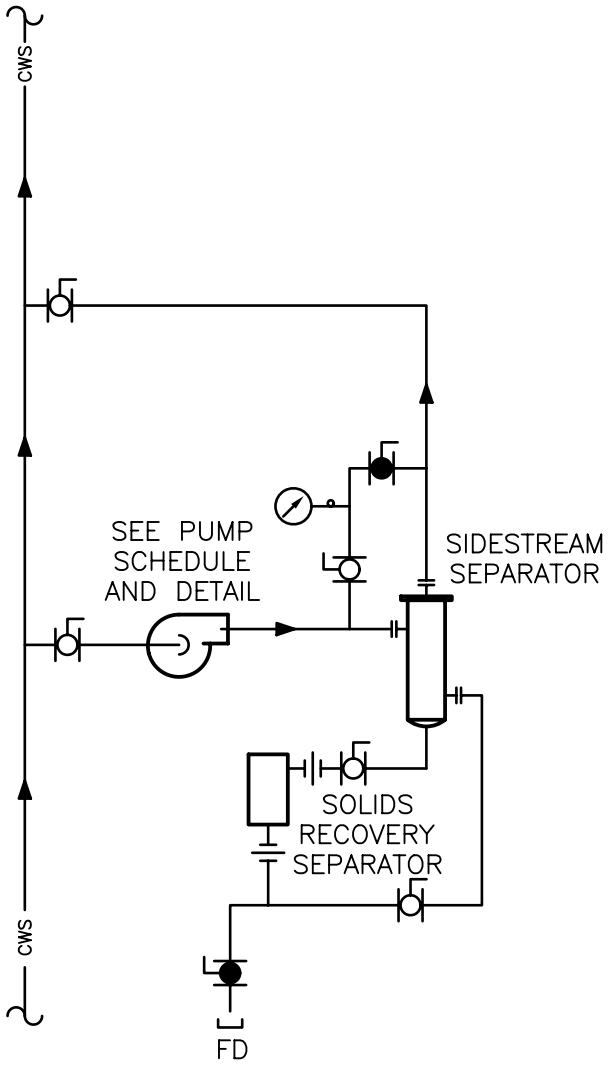

SEPARATOR DETAIL WITH SIDESTREAM PUMP

DESIGNER'S NOTE:

1. PROVIDE EITHER A COMMON SIDESTREAM SOLID SEPARATOR WITH PUMP OR A DEDICATED SEPARATOR FOR EACH CONDENSER WATER SYSTEM.

2. INCREASE CONDENSER WATER PUMP CAPACITY 5%–8% FOR A DEDICATED SIDESTREAM SEPARATOR.

SIDESTREAM SOLID SEPARATOR

#

NTS

Department of Veterans Affairs

DETAIL TITLE / SIDE STREAM SOLID SEPARATOR

SCALE : NONE

DATE ISSUED: DECEMBER 2008 CAD DETAIL NO.: SD232500–04.DWG

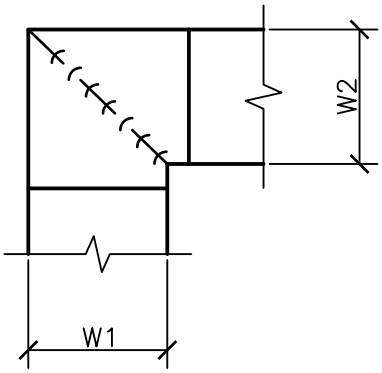

NOTE:

1. ALL VANE ELBOWS SHALL BE CONSTRUCTED AND INSTALLED AS DETAILED BY SMACNA.
2. WHEN W1 DOES NOT EQUAL W2, VANE SHALL BE SINGLE THICKNESS VANE TYPE REGARDLESS OF W DIMENSION.
3. ALL SINGLE THICKNESS VANES SHALL HAVE A 2" [50mm] RADIUS, 1 1/2" [40mm] MAXIMUM SPACE BETWEEN VANES AND A 3/4" [20mm] TRAILING EDGE.
4. WHEN W EQUALS W2 AND W1 IS GREATER THAN 20" [500mm] VANES SHALL BE DOUBLE VANE TYPE.

DUCTWORK SQUARE VANE ELBOWS

NTS

Department of Veterans Affairs

DETAIL TITLE / DUCTWORK SQUARE VANED ELBOWS

SCALE :NONE

DATE ISSUED: DECEMBER 2008 CAD DETAIL NO.: SD233100-01.DWG

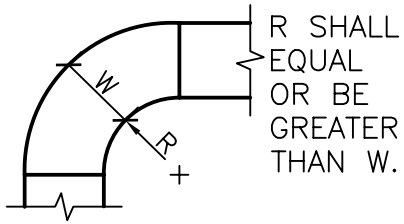

STANDARD RADIUS OR LONG RADIUS ELBOW

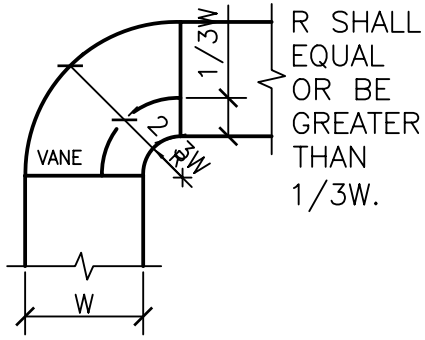

SHORT RADIUS ELBOW WITH ONE VANE

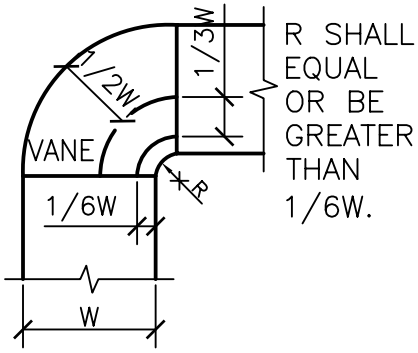

SHORT RADIUS ELBOW WITH TWO VANES

NOTE:

1. THE INTERIOR SURFACE OF ALL RADIUS ELBOWS SHALL BE MADE ROUND.
2. ALL STANDARD RADIUS ELBOWS CAN BE SUBSTITUTED WITH SHORT RADIUS ELBOWS. ALL SHORT RADIUS ELBOWS SHALL HAVE VANES. VANES SHALL BE CONSTRUCTED, SUPPORTED AND FASTENED AS RECOMMENDED BY SMACNA.

DUCTWORK RADIUS ELBOWS

#

NTS

DESIGNER'S NOTE:
DO NOT SHOW MITERED ELBOWS AND MITERED OFFSETS (TRANSITIONS) GREATER THAN 15 DEGREES ON DRAWINGS.

Department of Veterans Affairs

DETAIL TITLE / DUCTWORK RADIUS ELBOWS

SCALE :NONE

DATE ISSUED: DECEMBER 2008

CAD DETAIL NO.: SD233100-02.DWG

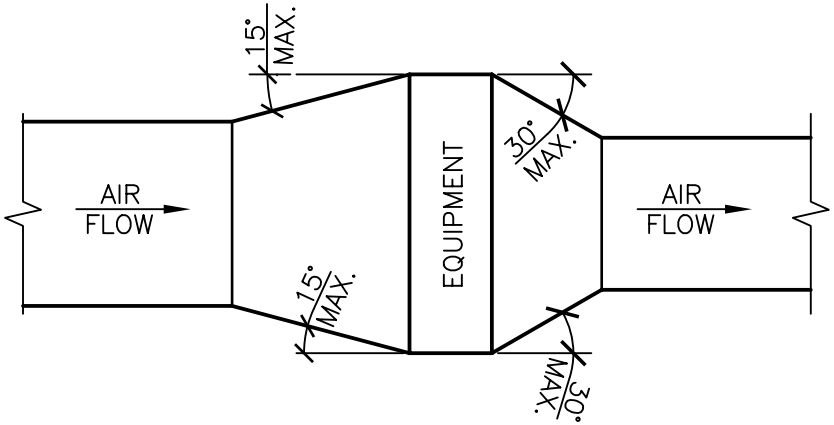

TYPICAL DUCTWORK TRANSITION WITH EQUIPMENT MOUNTED IN DUCT PLAN OR SIDE VIEW

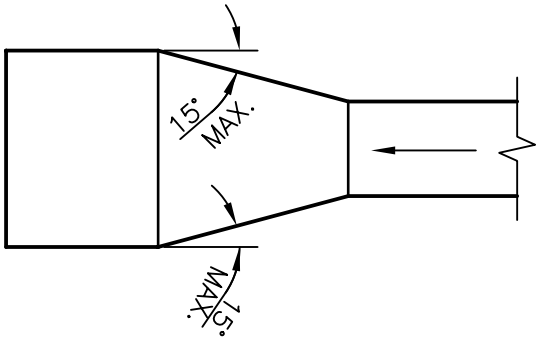

TYPICAL DUCTWORK TRANSITION PLAN OR SIDE VIEW

NOTE:
UNLESS OTHERWISE INDICATED ON PLANS, MAXIMUM ANGLES SHOWN SHALL APPLY.

DUCTWORK TRANSITIONS (WITH EQUIPMENT MOUNTED IN DUCT)

#

NTS

Department of Veterans Affairs

DETAIL TITLE / DUCTWORK TRANSITIONS (WITH EQUIPMENT MOUNTED IN DUCT)

SCALE :NONE

DATE ISSUED: DECEMBER 2008

CAD DETAIL NO.: SD233100-03.DWG

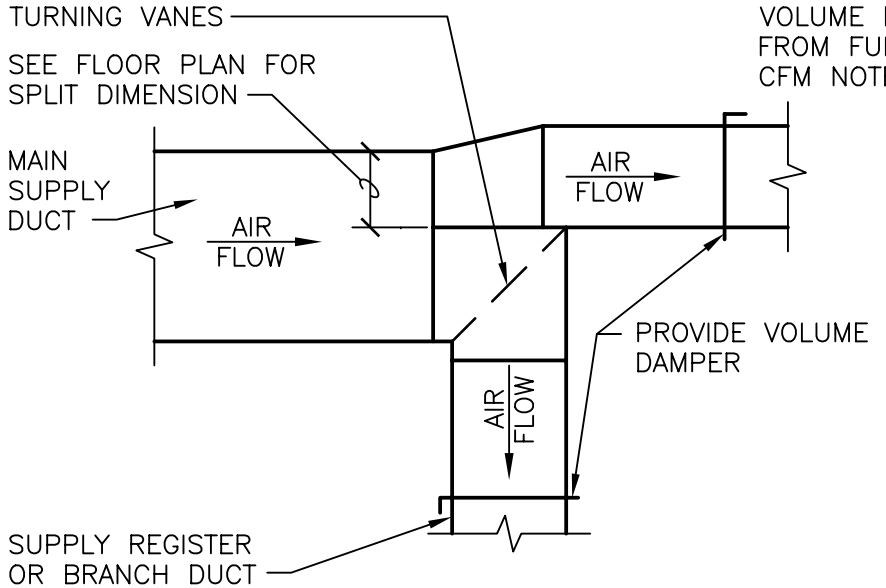

AIR SPLIT DUCT TAKE-OFF
PLAN VIEW

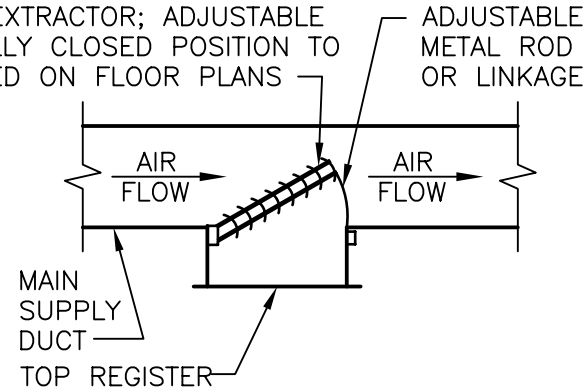

SUPPLY REGISTER TAKE-OFF
PLAN VIEW

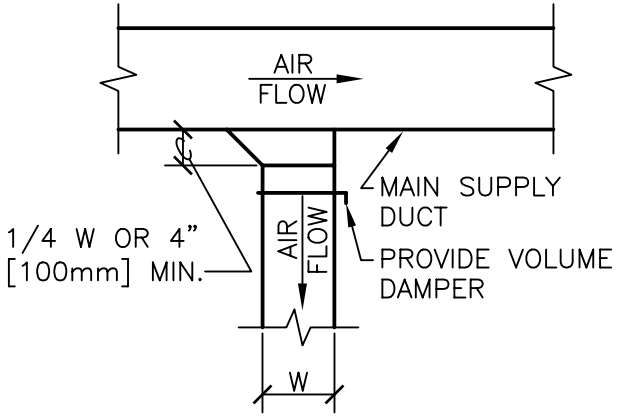

BRANCH DUCT TAKE-OFF PLAN VIEW

SUPPLY DUCTWORK TAKE-OFFS

NTS

DESIGNER'S NOTES:

1. THE SUPPLY REGISTER TAKE-OFF MAY BE USED FOR UP UP TO 25% OF THE MAIN DUCT CFM. THE BRANCH DUCT TAKE-OFF MAY BE USED FOR UP TO 15% OF THE MAIN DUCT CFM ANYTIME AND UP TO 40% WHEN THE MAIN DUCT VELOCITY IS 1000 FPM [5.1 M/S] OR LESS. THE AIR SPLIT DUCT TAKE-OFF SHALL BE USED IN ALL OTHER CASES AND MAY BE USED AT ANYTIME.

2. SHOW ALL VOLUME DAMPERS ON FLOOR PLANS.

Department of Veterans Affairs

DETAIL TITLE / SUPPLY DUCTWORK TAKE-OFFS

SCALE :NONE

DATE ISSUED: DECEMBER 2008

CAD DETAIL NO.: SD233100-04.DWG

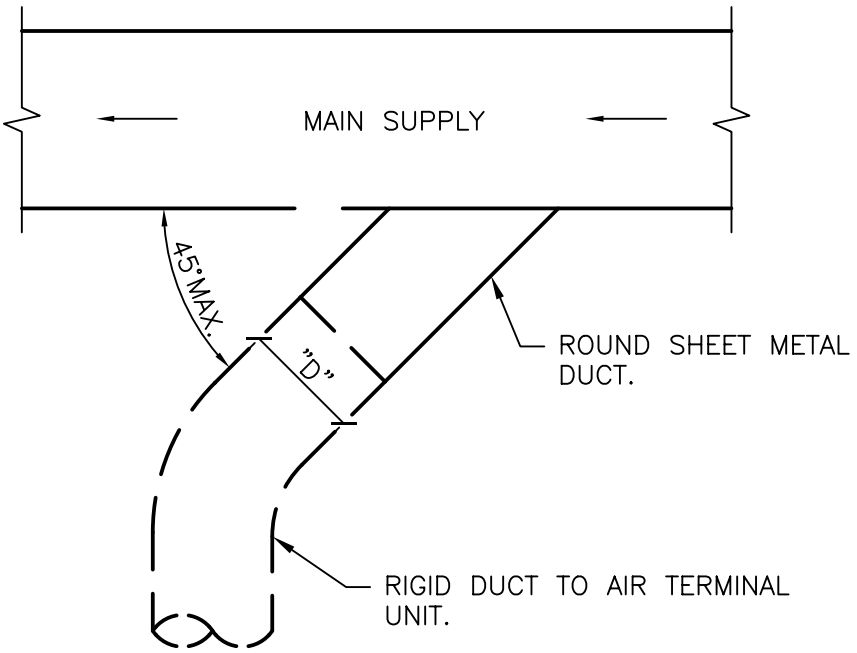

PLAN VIEW

SUPPLY DUCT TAKEOFF - AIR TERMINAL UNIT

NTS

Department of Veterans Affairs

DETAIL TITLE / SUPPLY DUCT TAKEOFF- AIR TERMINAL UNITS

SCALE :NONE

DATE ISSUED: DECEMBER 2008 CAD DETAIL NO.: SD233100-05.DWG

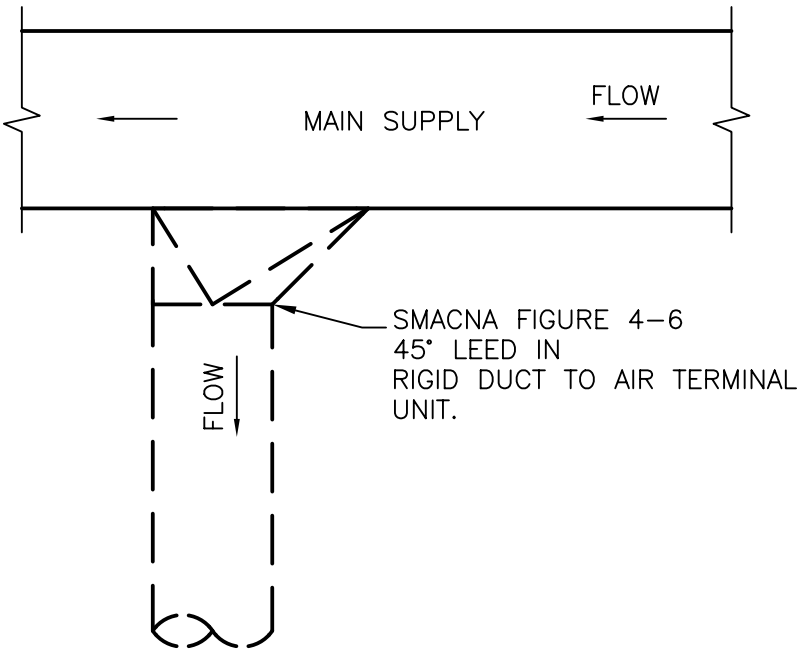

PLAN VIEW

ALTERNATE SUPPLY DUCT TAKEOFF - AIR TERMINAL UNITS

#

NTS

Department of Veterans Affairs

DETAIL TITLE / ALTERNATE SUPPLY DUCT TAKEOFF – AIR TERMINAL UNITS

SCALE :NONE

DATE ISSUED: DECEMBER 2008 CAD DETAIL NO.: SD233100–06.DWG

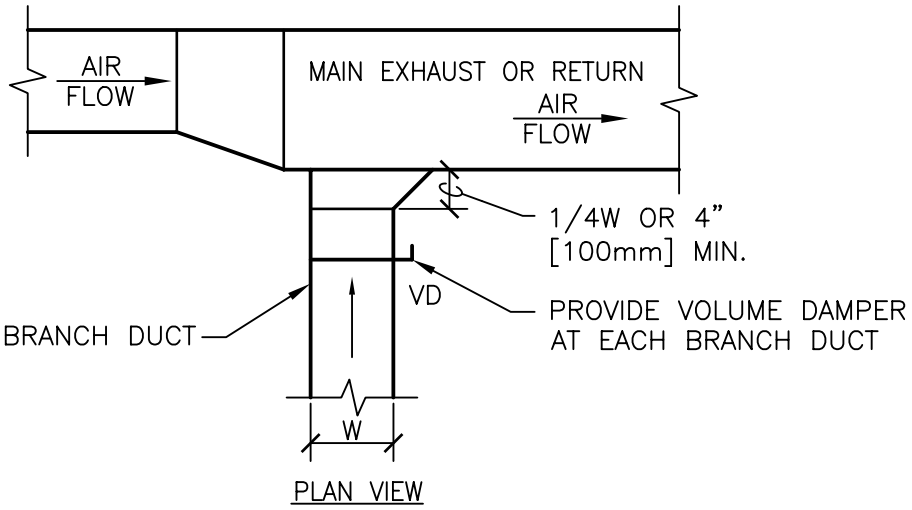

EXHAUST OR RETURN BRANCH DUCTWORK

#

NTS

DESIGNER'S NOTE:

1. SHOW ALL VOLUME DAMPERS ON FLOOR PLANS.

Department of Veterans Affairs

DETAIL TITLE / EXHAUST OR RETURN BRANCH DUCTWORK

SCALE :NONE

DATE ISSUED: DECEMBER 2008 CAD DETAIL NO.: SD233100-07.DWG

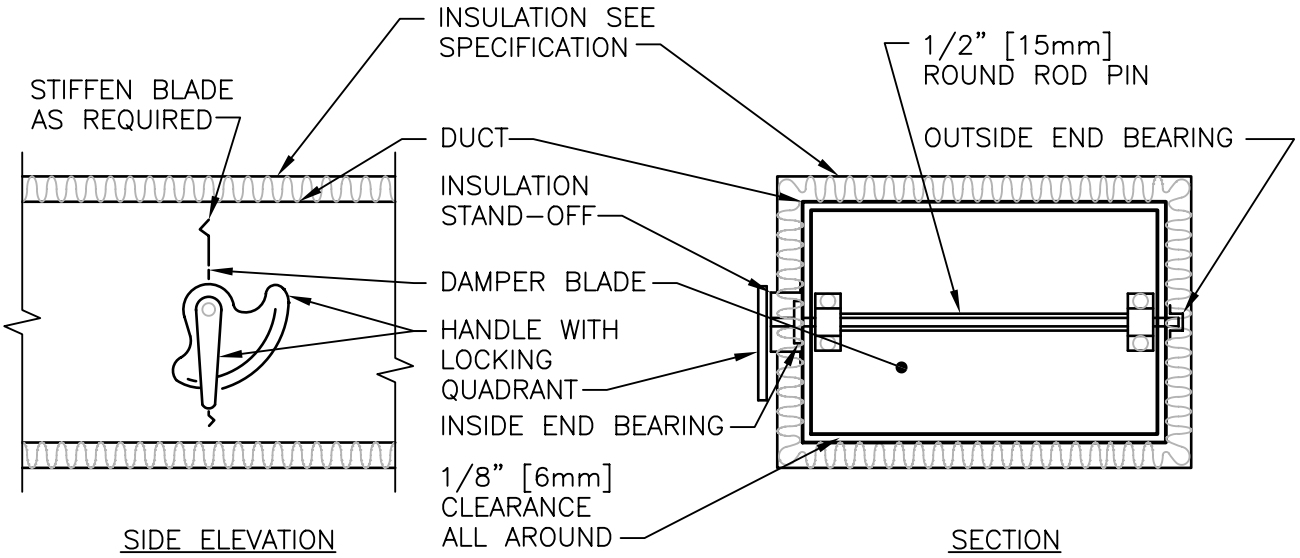

NOTE:

1. DELETE INSULATION STAND-OFF ON DUCTWORK WITHOUT EXTERIOR INSULATION.
2. DETAIL SHOWS SINGLE BLADE DAMPER. DAMPER INSTALLATION SHALL BE SIMILAR FOR MULTI-BLADE DAMPERS & ROUND DAMPERS.

VOLUME DAMPER DETAIL

NTS

Department of Veterans Affairs

DETAIL TITLE / VOLUME DAMPER DETAIL

SCALE :NONE

DATE ISSUED: DECEMBER 2008 CAD DETAIL NO.: SD233100-08.DWG

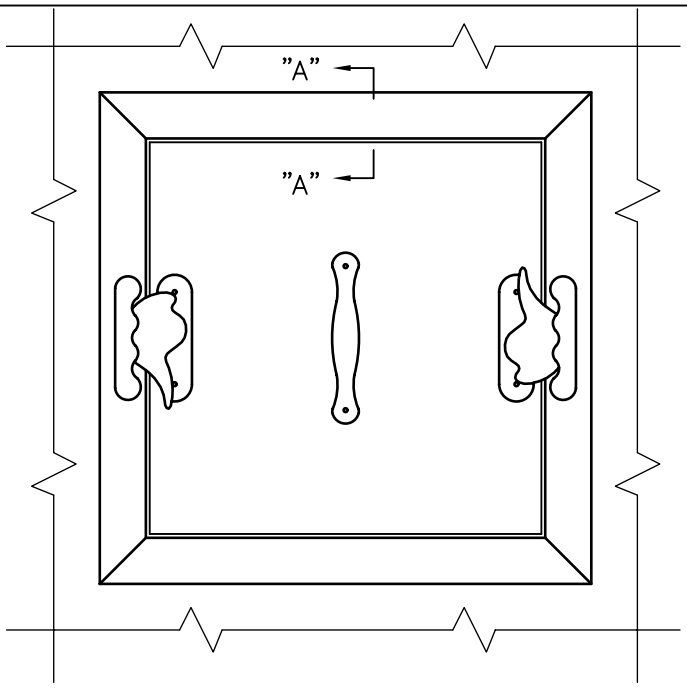

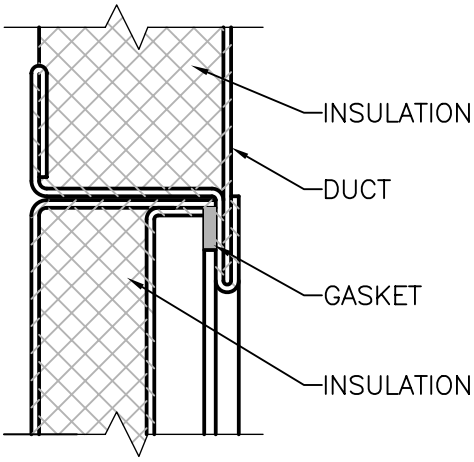

SECTION "A–A"

ACCESS PANEL

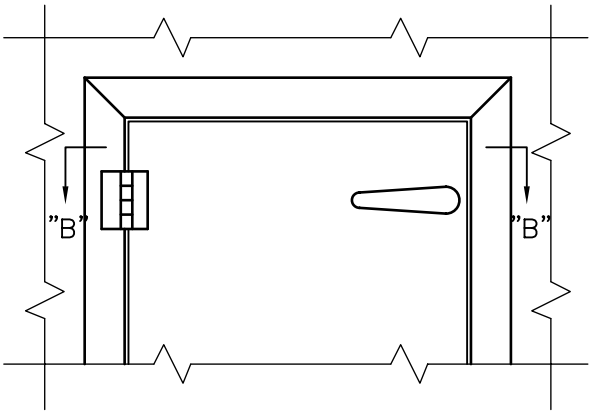

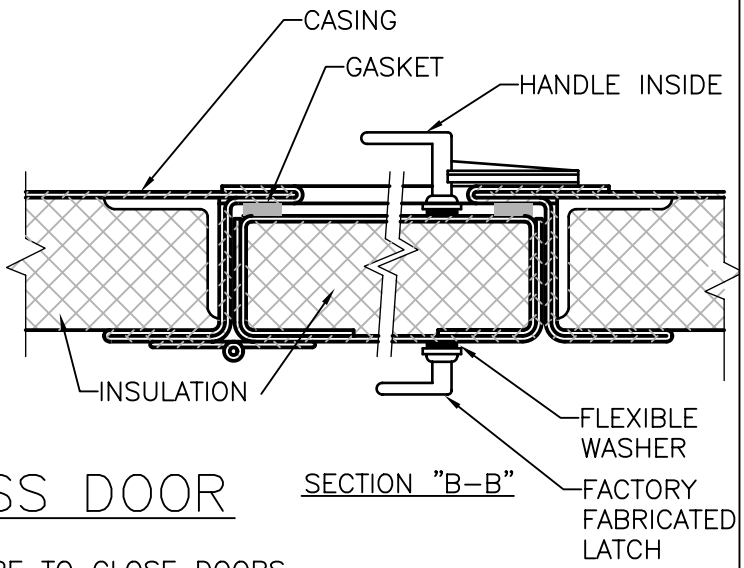

SECTION "B–B"

ACCESS DOOR

NOTES:
1. LATCHES SHALL BE OF THE WEDGE TYPE TO CLOSE DOORS TIGHTLY.
2. HINGES ON THE ACCESS DOORS SHALL HAVE NON–CORROSIVE PINS.
3. SEE SMACNA 2005, FIGURE 9–15

ACCESS PANEL AND DOOR DETAIL

#

NTS

DESIGNERS NOTES:
1. USE ACCESS DOORS ON AIR HANDLING UNITS AND DUCTWORK INSTALLED IN EQUIPMENT ROOMS.
2. USE ACCESS PANELS ON ALL EQUIPMENT AND DUCTWORK INSTALLED ABOVE FINISHED CEILINGS.

Department of Veterans Affairs

DETAIL TITLE / ACCESS PANEL AND DOOR DETAIL

SCALE :NONE

DATE ISSUED :DECEMBER 2008

CADD DETAIL NO. : SD233100–09.DWG

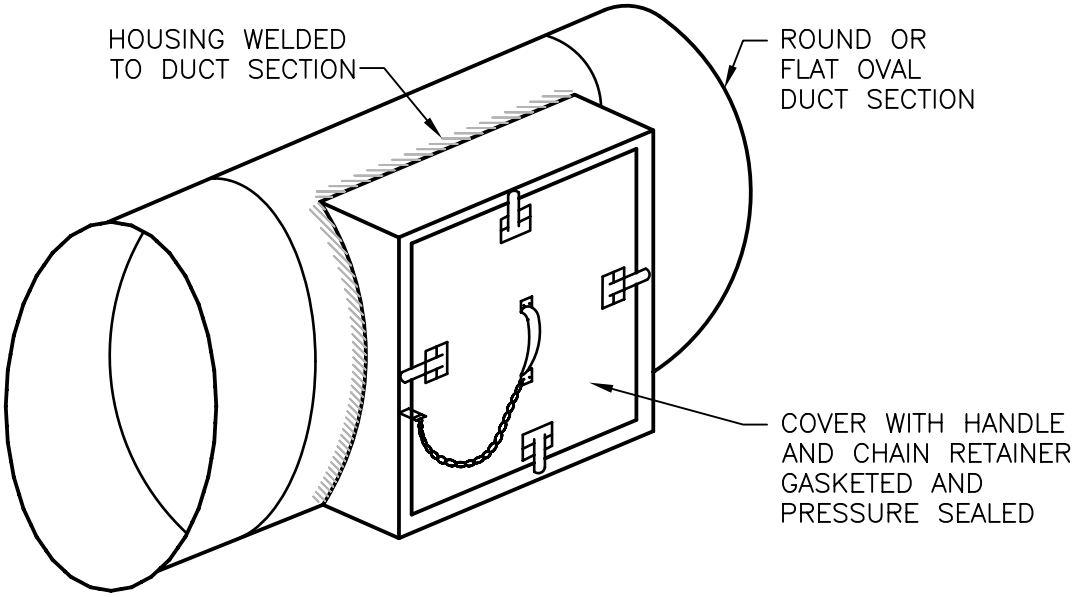

ACCESS SECTION FOR ROUND/OVAL DUCT

#

NTS

Department of Veterans Affairs

DETAIL TITLE / ACCESS SECTION FOR ROUND/OVAL DUCT

SCALE :NONE

DATE ISSUED: DECEMBER 2008 CAD DETAIL NO.: SD233100-10.DWG

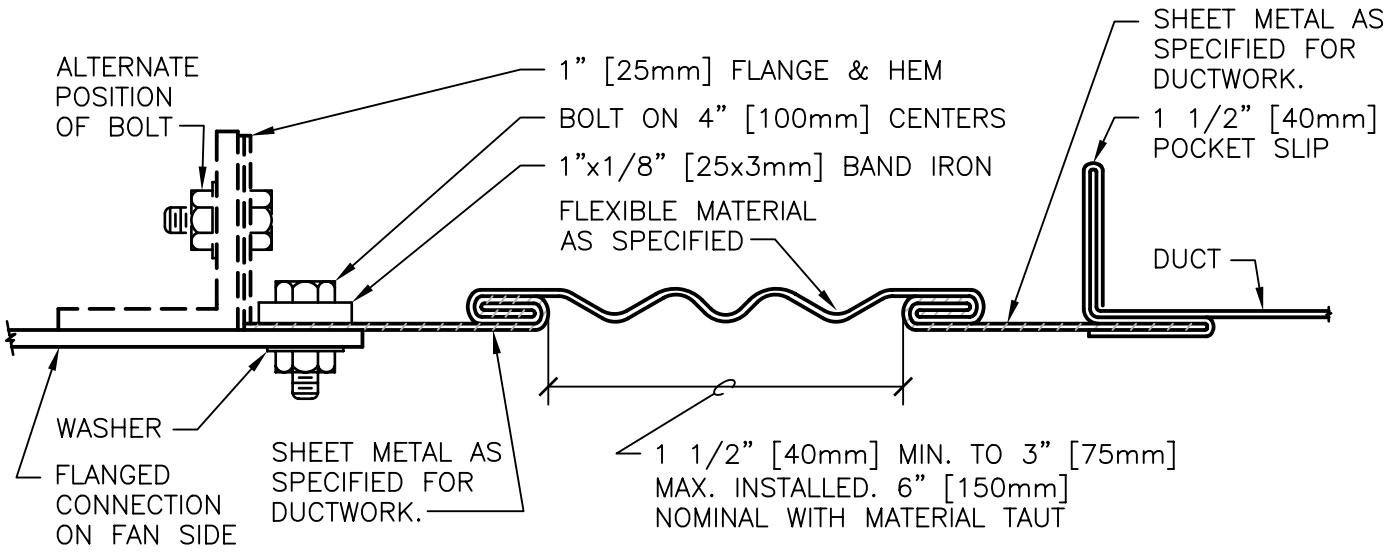

RECTANGULAR FLEXIBLE CONNECTION

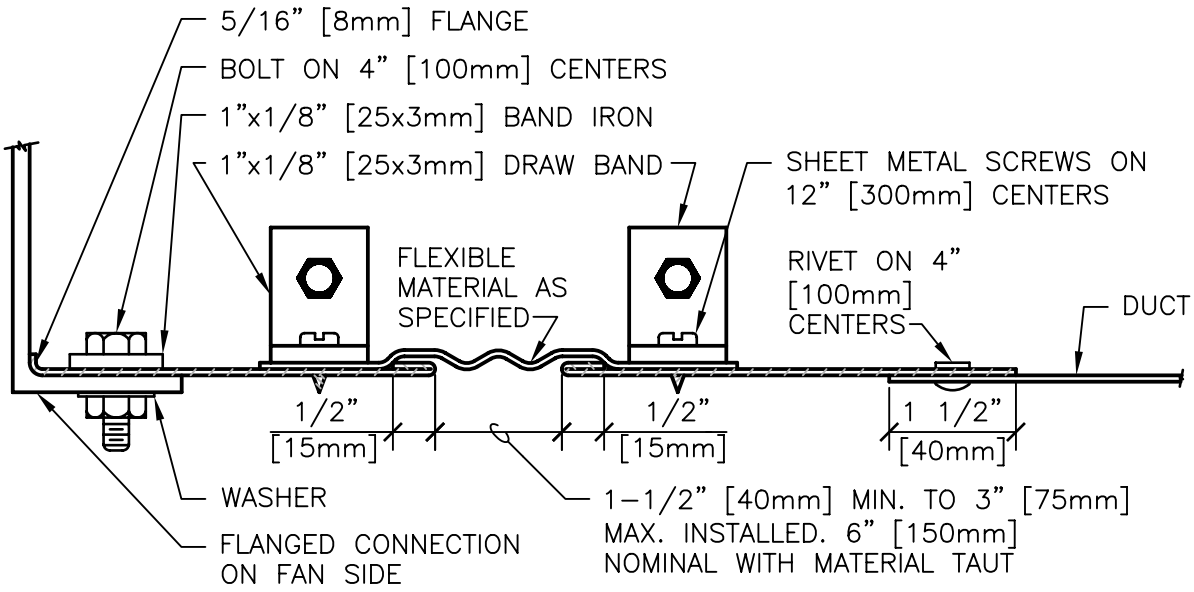

ROUND FLEXIBLE CONNECTION

FLEXIBLE DUCT CONNECTIONS

NTS

Department of Veterans Affairs

DETAIL TITLE / FLEXIBLE DUCT CONNECTIONS

SCALE :NONE

DATE ISSUED: DECEMBER 2008 CAD DETAIL NO.: SD233100-11.DWG

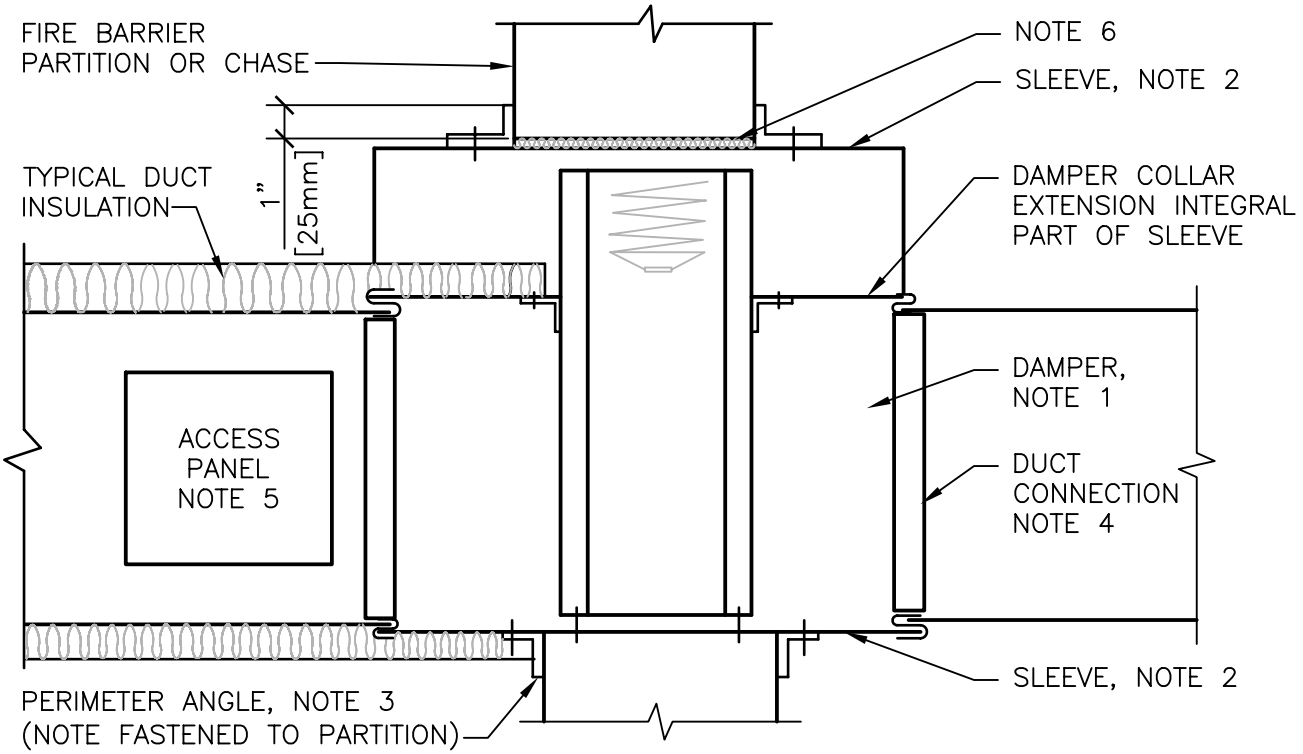

NOTE:

1. A VERTICAL DAMPER IS SHOWN. HORIZONTAL DAMPER INSTALLATION, 1S SIMILAR. FOLLOW DAMPER MANUFACTURER'S INSTRUCTIONS, INCLUDING FASTENER OPTIONS AND GAGES FOR SLEEVE AND PERIMETER ANGLES. FIRE DAMPERS MUST BE INSTALLED IN THE PARTITION OR FLOOR AND NOT OUTSIDE THE PENETRATION.

2. GALVANIZED SLEEVE: GAGE NOT LESS THAN CONNECTING DUCT. FASTEN SLEEVE TO DAMPER FRAME AND TO PERIMETER ANGLES.

3. PERIMETER ANGELS: GALVANIZED STEEL, NOT LESS THAN 1 1/2"x1 1/2" [40x40mm], 14 GAGE, TO PROVIDE 1" [25mm] MINIMUM OVERLAP OF OPENING ON ALL 4 SIDES.

4. BREAKAWAY DUCT CONNECTION: CONTRACTOR'S OPTION OF TYPES SHOWN IN SMACNA. ACCESS PANELS: SIZE AND LOCATION TO PERMIT SERVICING THE FUSIBLE LINK OR LINKS.

5. PROVIDE 1/4" TO 1/2" [6 TO 15mm] CLEARANCE ON HEIGHT AND WIDTH. FILL OPEN SPACE WITH ROCK WOOL FIRESTOP FIBER.

6. ALL DUCT WORK RISERS WHICH ARE RUN EXPOSED, SUCH AS THRU ATTIC FLOORS AND MECHANICAL ROOM FLOORS, SHALL BE PROVIDED WITH 3" [75mm] HIGH

7. CONCRETE CURB AROUND OPENING FOR DUCT.

SECTION THRU FIRE DAMPER INSTALLATION

#

NTS

Department of Veterans Affairs

DETAIL TITLE / SECTION THRU FIRE DAMPER INSTALLATION

SCALE :NONE

DATE ISSUED: DECEMBER 2008 CAD DETAIL NO.: SD233100-12.DWG

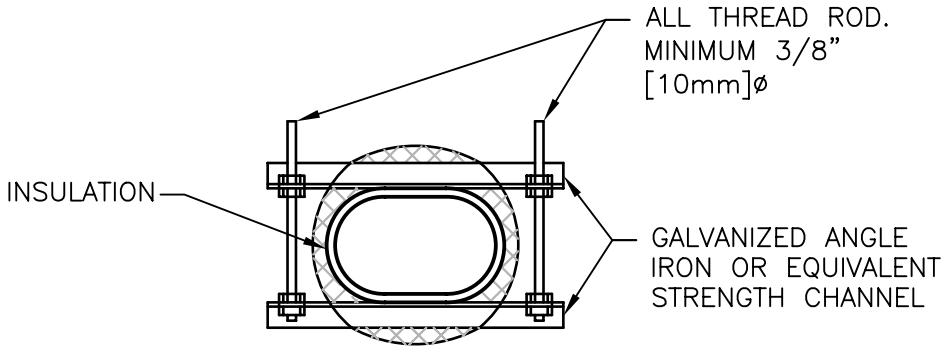

NOTE:

1. PROVIDE BRACING TO LIMIT THE AMPLITUDE OF WALL VIBRATION AND WALL DEFLECTION TO SPECIFIED MAXIMUMS.

2. MINIMUM BRACING REQUIREMENTS:

MAXIMUM DUCT WIDTH IN. [mm]	MAXIMUM SIZE ANGLE IN. [mm]	MAXIMUM SPACING IN. [mm]
UP TO 26 [650]	NONE	
27 [675] TO 40 [1000]	1-1/2x1-1/2x3/16 [40x40x7]	72 [1800]
41 [1000] TO 60 [1500]	2x2x3/16 [50x50x7]	48 [1200]
61 [1500] TO 72 [1800]	2x2x3/16 [50x50x7]	24 [600]

3. INSULATION: FOR COLD DUCTS INSULATE BRACES AND PROVIDE VAPOR BARRIER.

FLAT OVAL DUCT HANGERS/REINFORCEMENT

#

NTS

Department of Veterans Affairs

DETAIL TITLE / FLAT OVAL DUCT HANGERS/REINFORCEMENT

SCALE :NONE

DATE ISSUED: DECEMBER 2008 CAD DETAIL NO.: SD233100-13.DWG

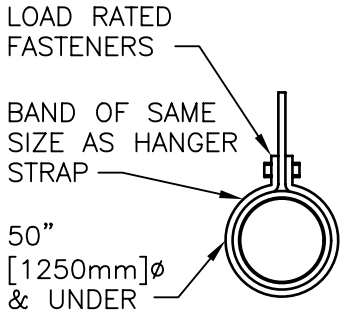

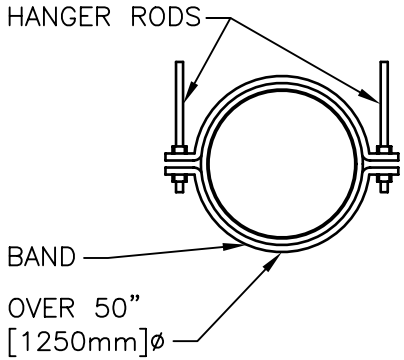

HANGER STRAPS OR RODS

MAX. DUCT ø IN. [mm]	QUANTITY/SIZE IN. [mm]	MAX. LOAD LBS. [kg]	MAX. SPACING IN. [mm]
26 [650]	ONE 1 [25] x 22 GA STRAP	260 [119]	144 [3600]
36 [900]	ONE 1 [25] x 18 GA STRAP	420 [190]	144 [3600]
50 [1250]	ONE 1 [25] x 16 GA STRAP	700 [317]	144 [3600]
60 [1500]	TWO 3/8 [10]ø. RODS	1320 [598]	144 [3600]
84 [2100]	TWO 1/2 [13]ø RODS	2500 [1133]	144 [3600]

NOTE:
TABULATED DATA FROM SMACNA ALLOWS FOR DUCT REINFORCING AND INSULATION, BUT NO EXTERNAL LOAD.

ROUND DUCT HANGERS

#

NTS

DESIGNER'S NOTE:
DESCRIBE OR DETAIL UPPER ATTACHMENTS APPLICABLE TO PARTICULAR PROJECTS.

Department of Veterans Affairs

DETAIL TITLE / ROUND DUCT HANGERS

SCALE :NONE

DATE ISSUED: DECEMBER 2008

CAD DETAIL NO.: SD233100-14.DWG

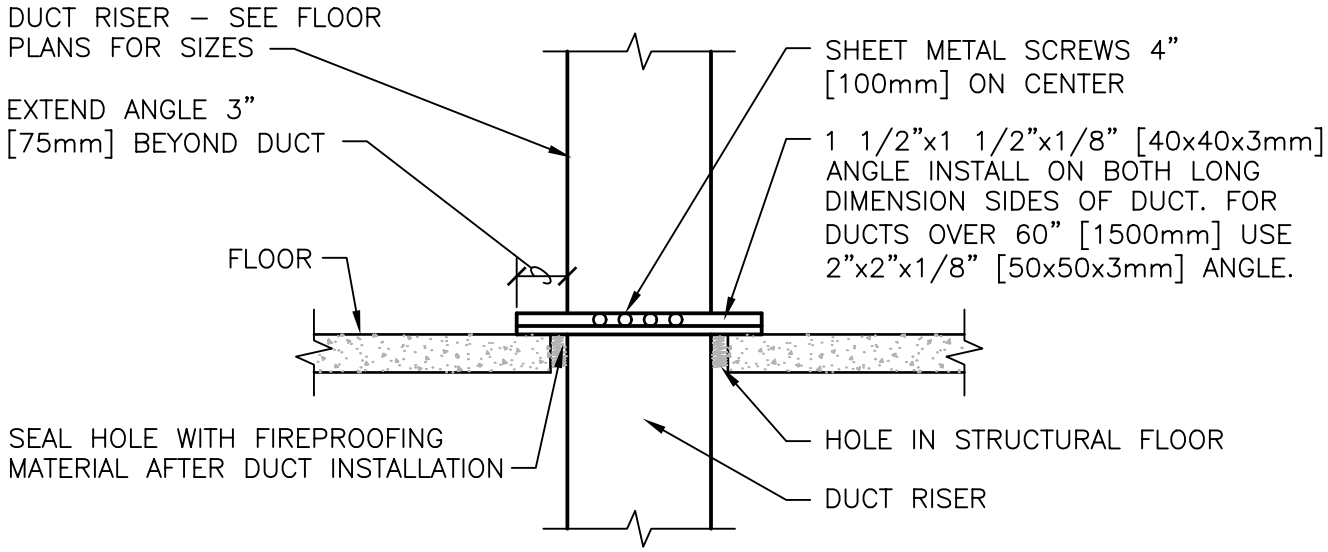

0.5 INCH WG [125Pa] TO 2 INCHES WG [500Pa] DUCT RISER SUPPORT

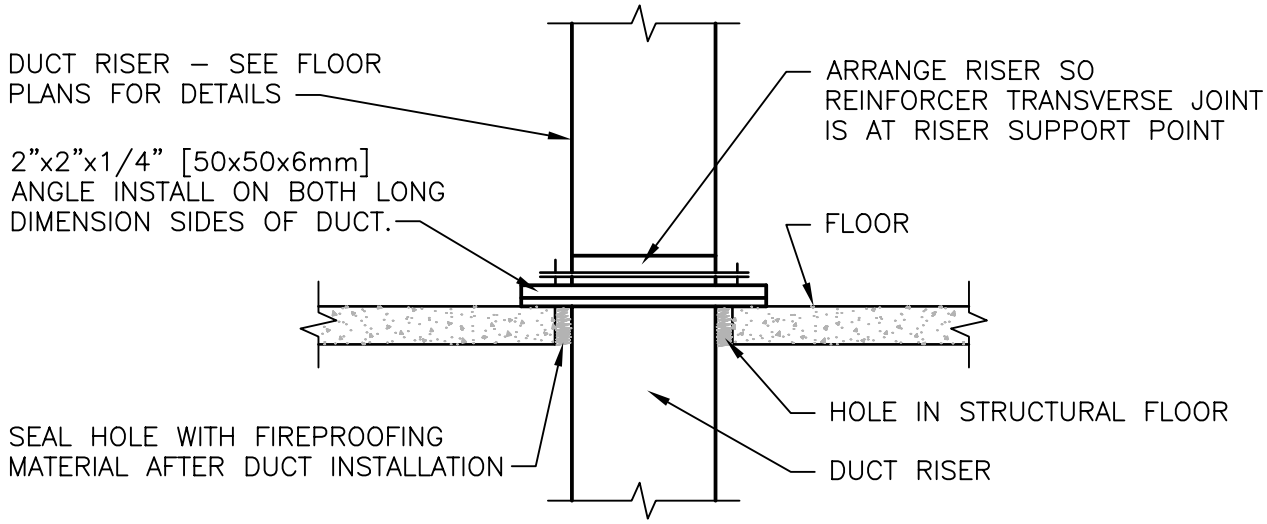

2 INCHES WG [500Pa] TO 4 INCHES WG [1000Pa] DUCT RISER SUPPORT

NOTE:
ALL DUCT WORK RISERS WHICH ARE RUN EXPOSED, SUCH AS THRU ATTIC FLOORS AND FAN ROOM FLOORS SHALL BE PROVIDED WITH A 3" [75mm] HIGH CONCRETE CURB AROUND OPENING FOR DUCT.

DUCT RISER SUPPORTS

#

NTS

DESIGNER'S NOTE:
INDICATE ON DRAWING THE DUCT PRESSURE CLASS 2" WG [500Pa] WG, 3" WG [750Pa] OR 4" WG [1000Pa].

Department of Veterans Affairs

DETAIL TITLE / DUCT RISER SUPPORTS

SCALE :NONE

DATE ISSUED: DECEMBER 2008 CAD DETAIL NO.: SD233100-15.DWG

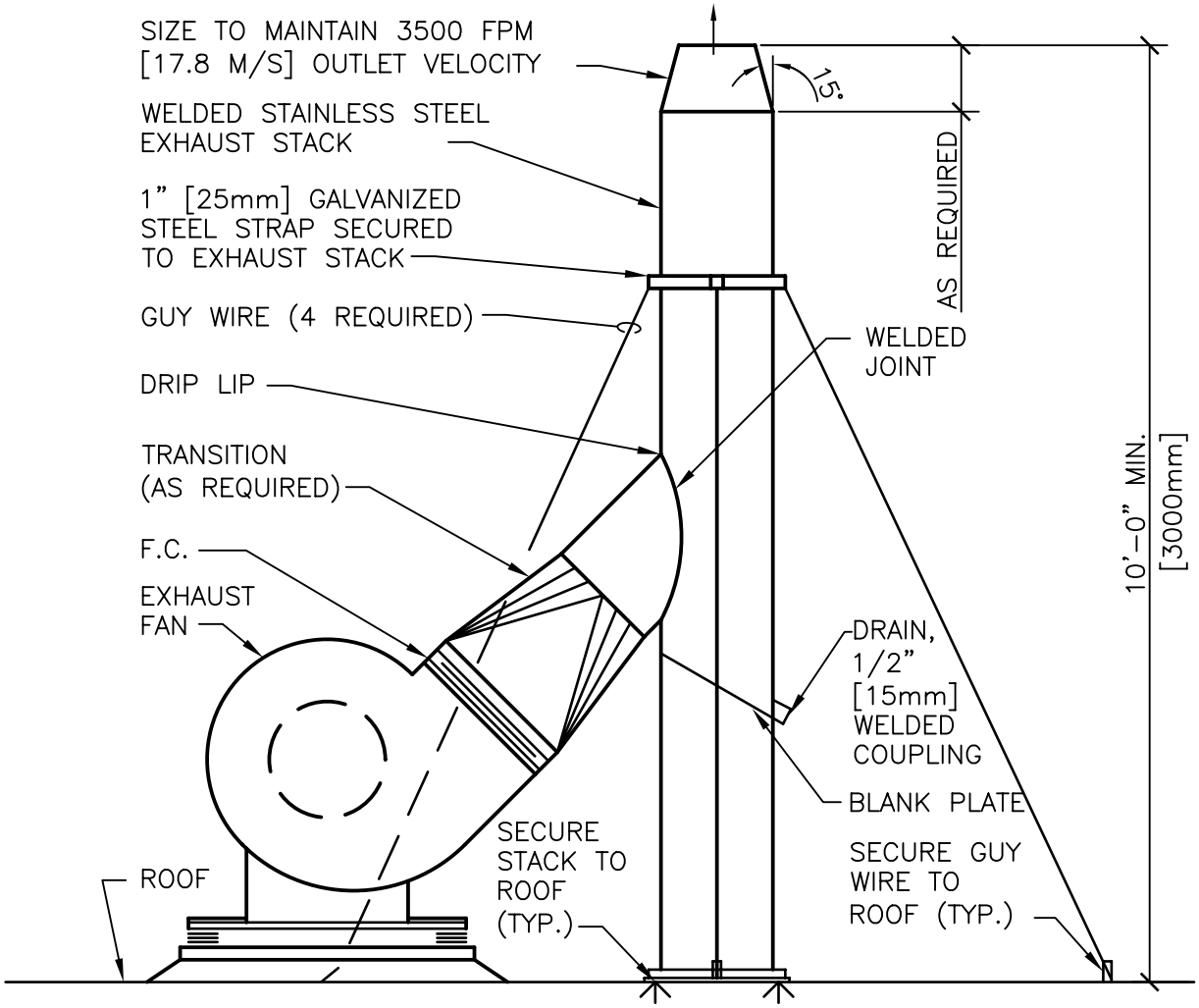

EXHAUST STACK DETAIL

#

NTS

DESIGNER'S NOTE:

1. 10 FEET MINIMUM HEIGHT IS SHOWN. INCREASE THE HEIGHT, AS REQUIRED, TO COMPLY WITH THE RECOMMENDATIONS OF THE DISPERSION ANALYSIS.

2. USE THIS DETAIL FOR FUME HOODS,BIOLOGICAL SAFETY CABINETS, ISOLATION ROOM EXHAUST AND ANY OTHER APPLICABLE AREA.

Department of Veterans Affairs

DETAIL TITLE / EXHAUST STACK DETAIL

SCALE :NONE

DATE ISSUED: DECEMBER 2008 CAD DETAIL NO.: SD233100-16.DWG

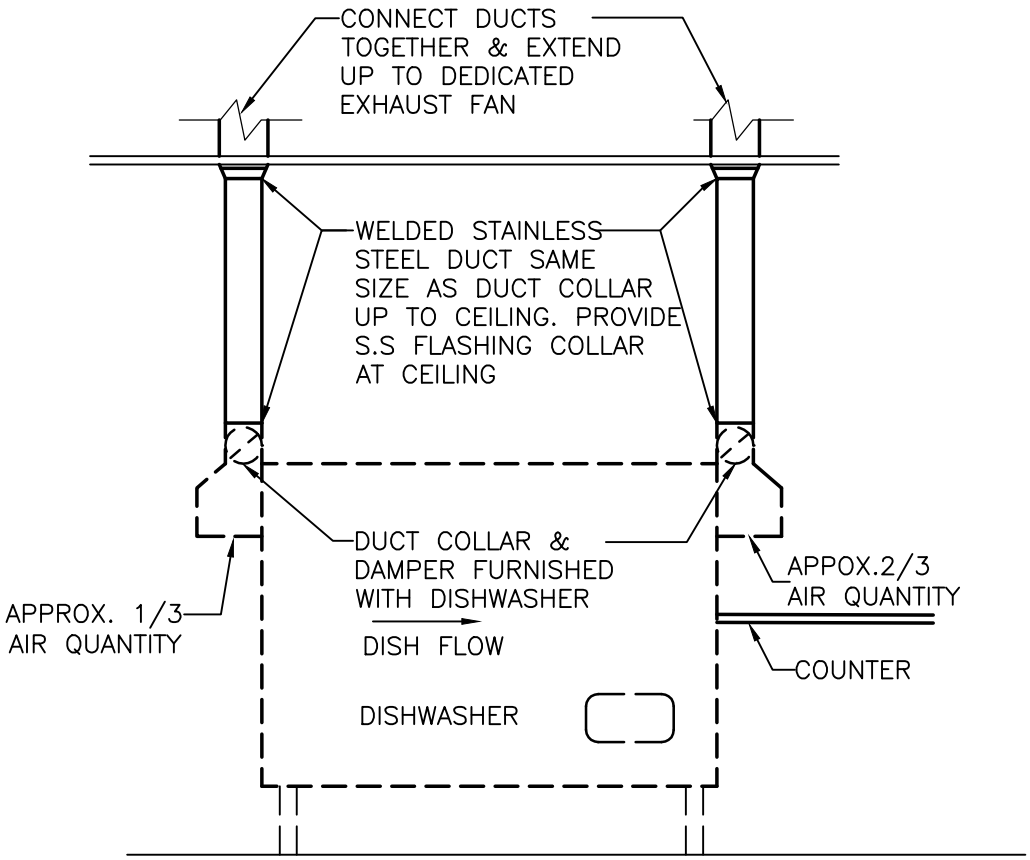

NOTES:

1. ALL DUCTS SHALL BE WATER TIGHT WELDED STAINLESS STEEL TO EXHAUST FAN.
2. PITCH DUCTS DOWN TOWARD INTAKE OPENINGS OR PROVIDE DRAIN AT ANY POINT WHERE WATER WILL COLLECT.
3. SEE FLOOR PLANS FOR EXHAUST AIR VOLUME AND DUCT SIZES.

EXHAUST DUCTWORK - GLASSWASHER

#

NTS

DESIGNER'S NOTES:

1. DETAIL IS FOR DISHWASHER/GLASSWASHER SEE EQUIPMENT DRAWINGS.

Department of Veterans Affairs

DETAIL TITLE / EXHAUST DUCTWORK -GLASSWASHER

SCALE :NONE

DATE ISSUED :MAY 2011

CADD DETAIL NO. : SD233100-17.DWG

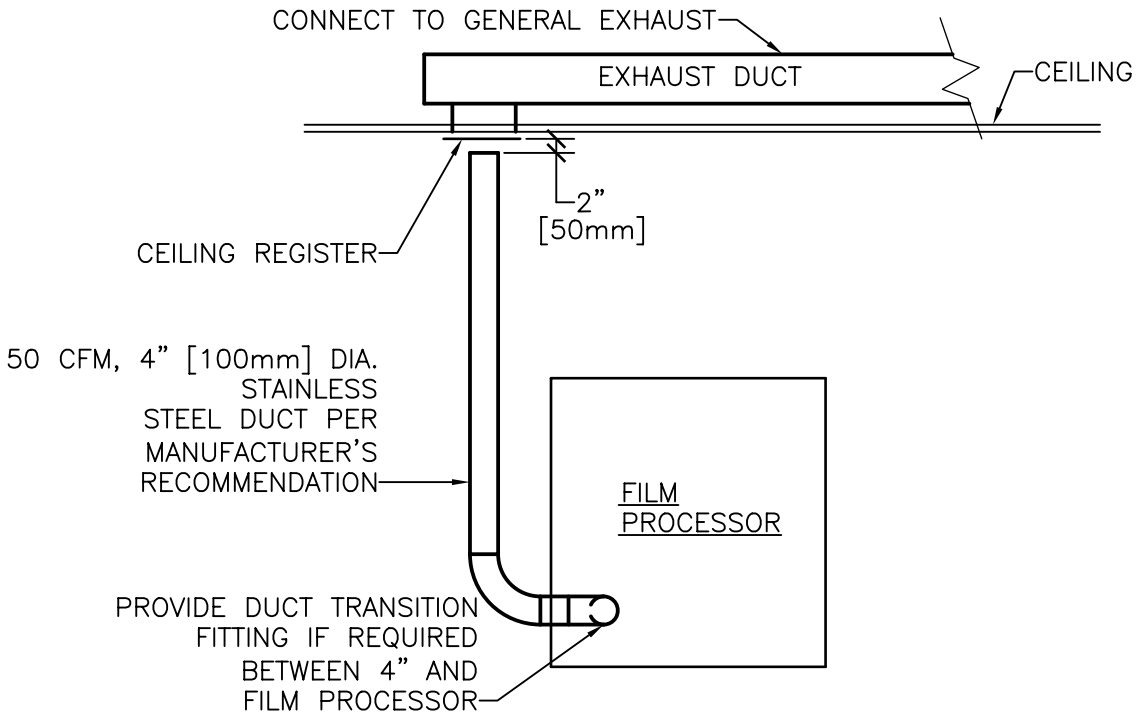

NOTE:

1. USE THIS DETAIL ONLY IF THE FILM PROCESSING INVOLVES USE OF CHEMICALS.

DUCTWORK CONNECTION - FILM PROCESSOR

#

NTS

Department of Veterans Affairs

DETAIL TITLE / DUCTWORK CONNECTION - FILM PROCESSOR

SCALE :NONE

DATE ISSUED :DECEMBER 2008

CADD DETAIL NO. : SD233100-18.DWG

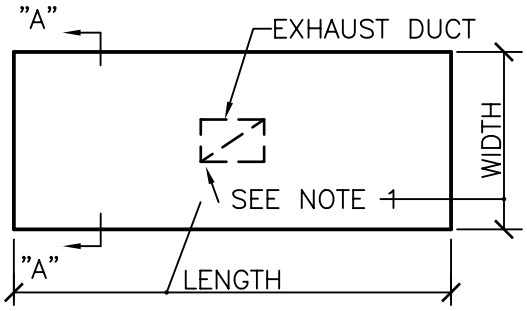

PLAN

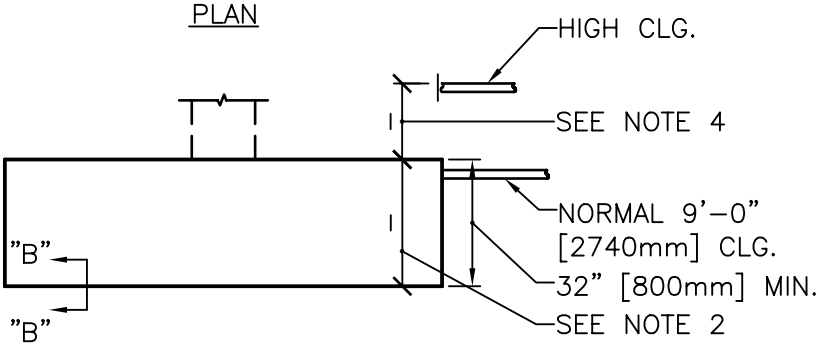

FRONT ELEVATION

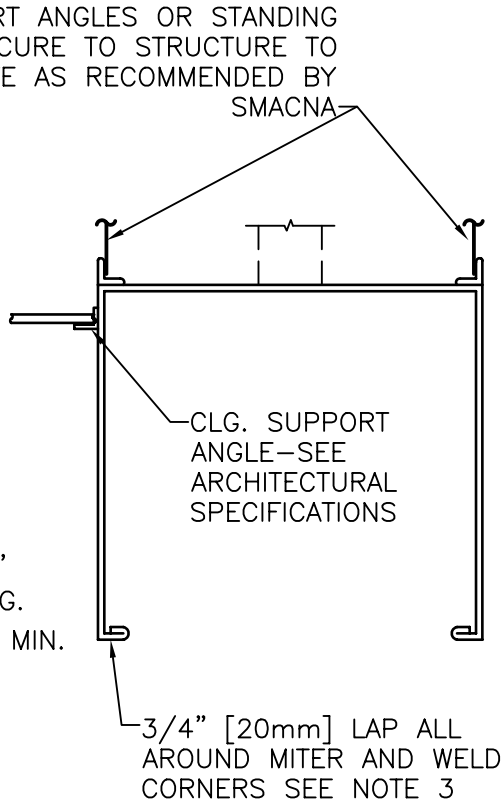

SECTION "A-A"

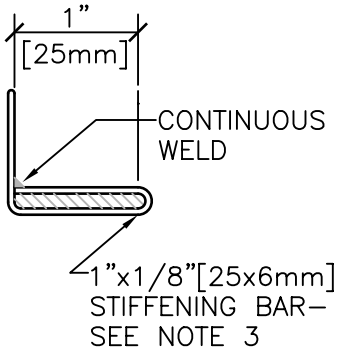

SECTION "B-B"

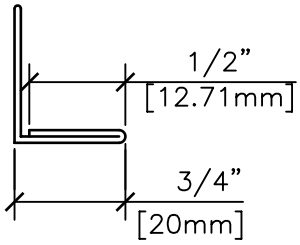

NOTES:

1. HOODS SHALL BE STAINLESS STEEL, SEE SPECIFICATIONS. FOR HOOD SIZE & LOCATION SEE EQUIPMENT SCHEDULE. FOR EXHAUST DUCT CONNECTIONS – SEE FLOOR PLANS.
2. ALL HOODS SHALL BE 6'-6" [2m] ABOVE FINISHED FLOOR UNLESS OTHERWISE NOTED. HOODS OVER URNS SHALL BE 7'-6" [2.3m] MINIMUM ABOVE FINISHED FLOOR.
3. HOODS OVER 6'-0" [1.9m] LONG WITH 2 OR MORE SECTIONS, SHALL HAVE INSIDE STANDING SEAM AND 1"x1/8" [25x6mm] STIFFENING BAR – SEE SECTION "B-B".
4. EXTEND SIDE & END SHEET TO SUIT HIGH CEILING WHEN REQUIRED.
5. DETAIL SHOWS HOOD IN OPEN SPACE. WHEN HOOD IS INSTALLED AT WALL OR PARTITION SECURE TO WALL OR PARTITION WITH EXPANSION BOLTS.

HOOD TYPE "A"

NTS

DESIGNER'S NOTE:
VERIFY ALL DIMENSIONS. SEE ARCHITECTURAL FLOOR PLANS FOR REQUIRED HOOD LOCATIONS.

Department of Veterans Affairs

DETAIL TITLE / HOOD TYPE "A"

SCALE :NONE

DATE ISSUED :DECEMBER 2008 CADD DETAIL NO. : SD233100-19.DWG

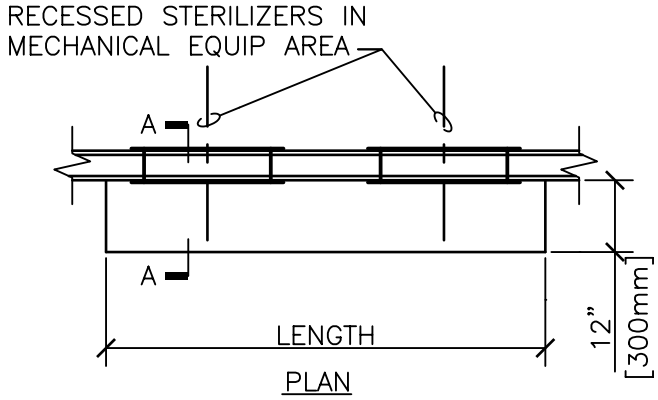

PLAN

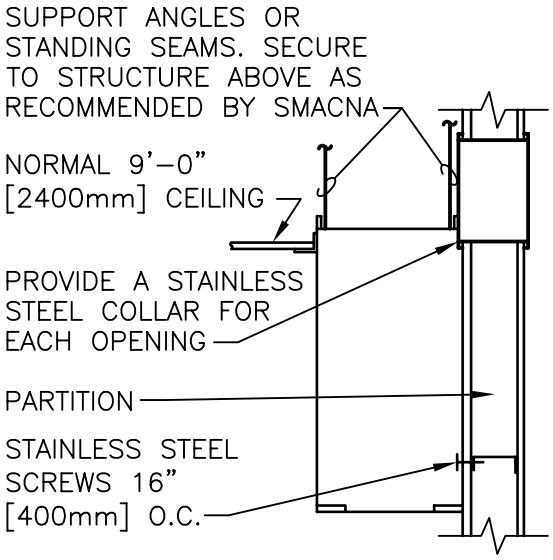

SECTION A

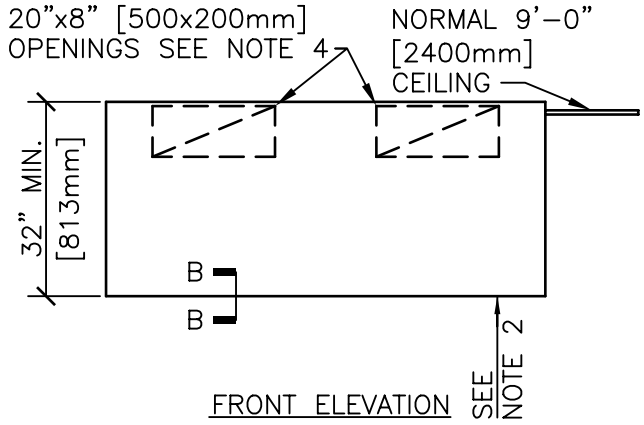

FRONT ELEVATION

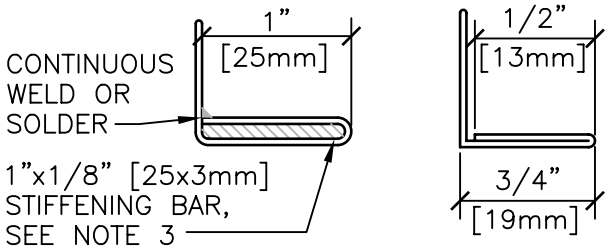

SECTION B

NOTE:

1. HOODS SHALL BE STAINLESS STEEL. SEE SPECIFICATIONS. FOR HOOD SIZES & LOCATIONS SEE EQUIPMENT SCHEDULE OR FLOOR PLANS.
2. HOODS SHALL BE 6'-6" [1950mm] ABOVE FINISHED FLOOR.
3. HOODS OVER 6'-0" [1800mm] LONG WITH 2 OR MORE SECTIONS SHALL HAVE INSIDE STANDING SEAM AND 1"x1/8" [25x3mm] STIFFENING BAR. SEE SECTION B.
4. PROVIDE A 20"x8" [500x200mm] OPENING OVER EACH STERILIZER. LOCATE OPENING AS HIGH AS POSSIBLE IN HOOD, BUT BELOW CEILING IN MECHANICAL EQUIPMENT AREA IF ROOM HAS A CEILING.

HOOD TYPE "B"

NTS

DESIGNER'S NOTE:

1. SEE ARCHITECTURAL PLANS FOR REQUIRED HOOD LOCATIONS. USE TYPE "B" HOOD FOR RECESSED STERILIZERS, WHEN STERILIZERS ARE INSTALLED IN A MECHANICAL EQUIPMENT AREA.

Department of Veterans Affairs

DETAIL TITLE / HOOD TYPE "B"

SCALE :NONE

DATE ISSUED: DECEMBER 2008 CAD DETAIL NO.: SD233100-20.DWG

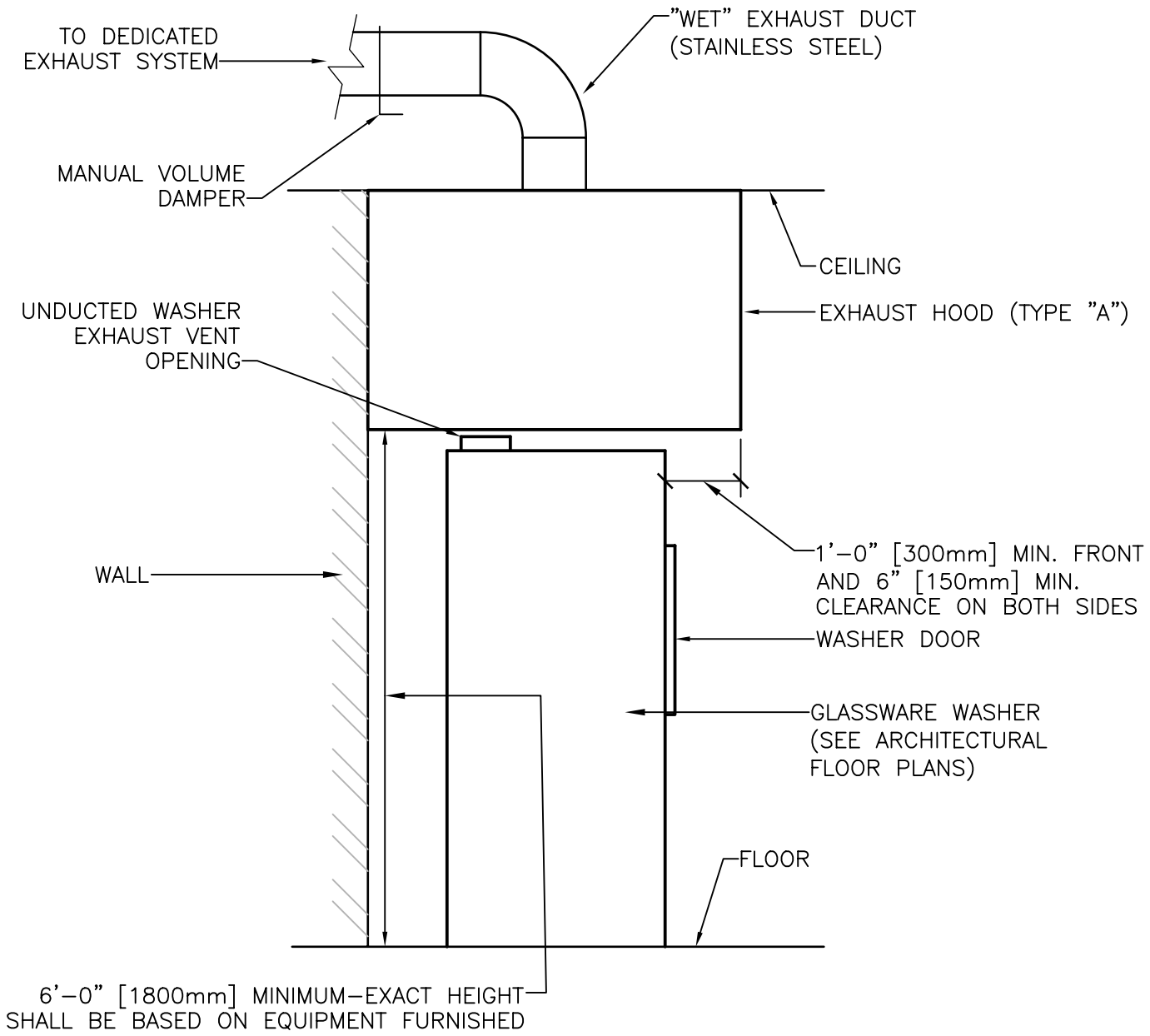

EXHAUST DUCTWORK- GLASSWARE WASHER

#

NTS

DESIGNER'S NOTES:

1. SEE VA STANDARD DETAIL 23 31 00-20 FOR CONSTRUCTION & INSTALLATION DETAILS.
2. COORDINATE HOOD DIMENSIONS AND EXHAUST AIR VOLUME SHOWN ON THE EQUIPMENT DRAWINGS. EXHAUST AIR VOLUME SHALL BE BASED ON THE 100 FPM [.5 M/sec] VELOCITY THRU THE FACE AREA OF THE HOOD.

Department of Veterans Affairs

DETAIL TITLE / EXHAUST DUCTWORK - GLASSWARE WASHER

SCALE :NONE

DATE ISSUED :DECEMBER 2008

CADD DETAIL NO. : SD233100-21.DWG

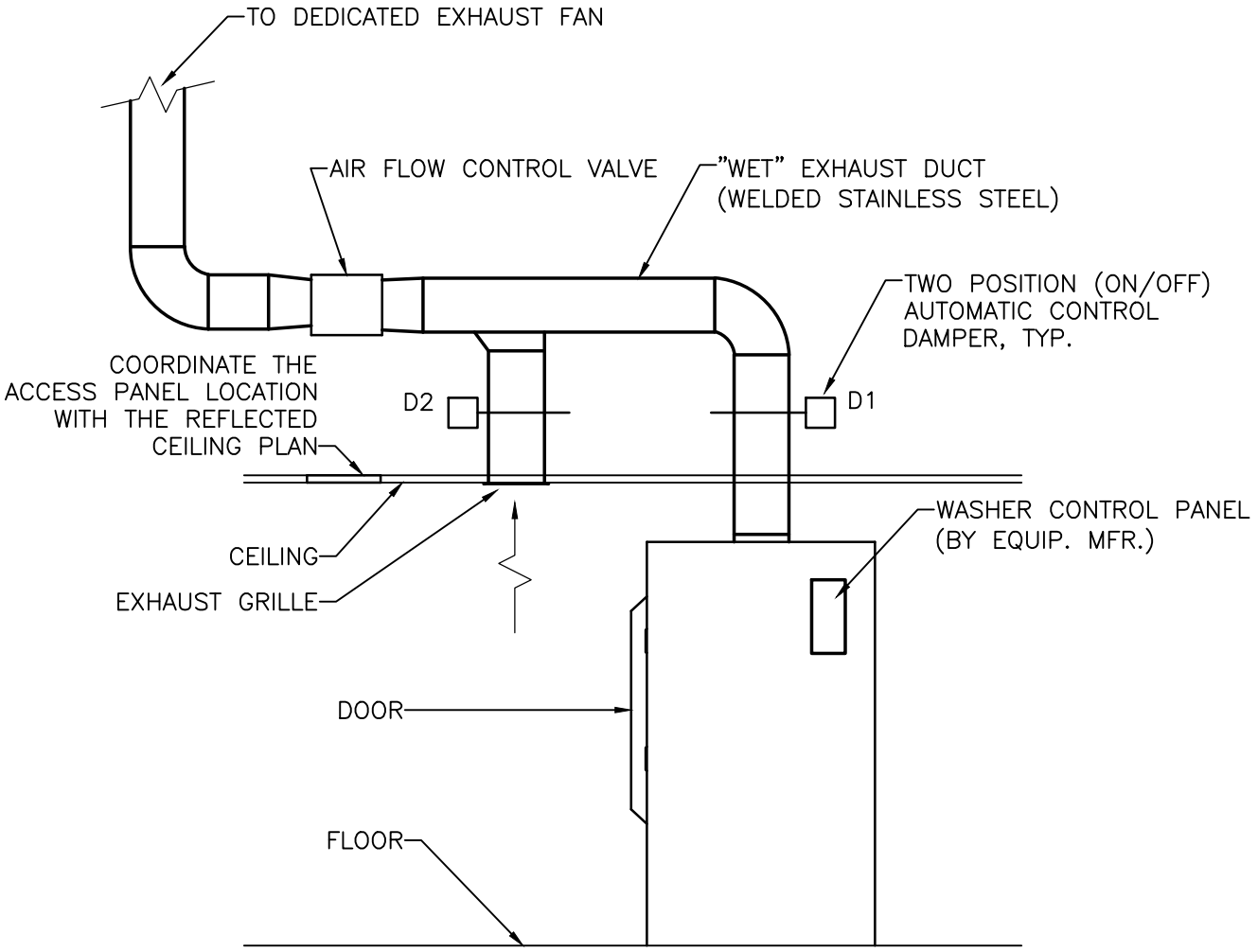

SEQUENCE OF CONTROL

1. WHEN WASHER DOOR IS OPEN CONTROL DAMPER D1 OPENS AND CONTROL DAMPER D2 CLOSES.
2. WHEN WASHER DOOR IS CLOSED CONTROL DAMPER D1 CLOSES AND CONTROL DAMPER D2 OPENS.
3. MAINTAIN EXHAUST DUCT UNDER NEGATIVE PRESSURE THROUGHOUT ITS RUN.

EXHAUST DUCTWORK - CAGE WASHER

#

NTS

DESIGNER'S NOTES:

1. COORDINATE EXHAUST CFM WITH THE ARCHITECTURAL EQUIPMENT DRAWINGS.
2. COORDINATE DAMPER OPERATION WITH WASHER DOOR, THRU THE WASHER CONTROL PANEL.

Department of Veterans Affairs

DETAIL TITLE / EXHAUST DUCTWORK - CAGE WASHER

SCALE :NONE

DATE ISSUED :MAY 2011

CADD DETAIL NO. : SD233100-22.DWG

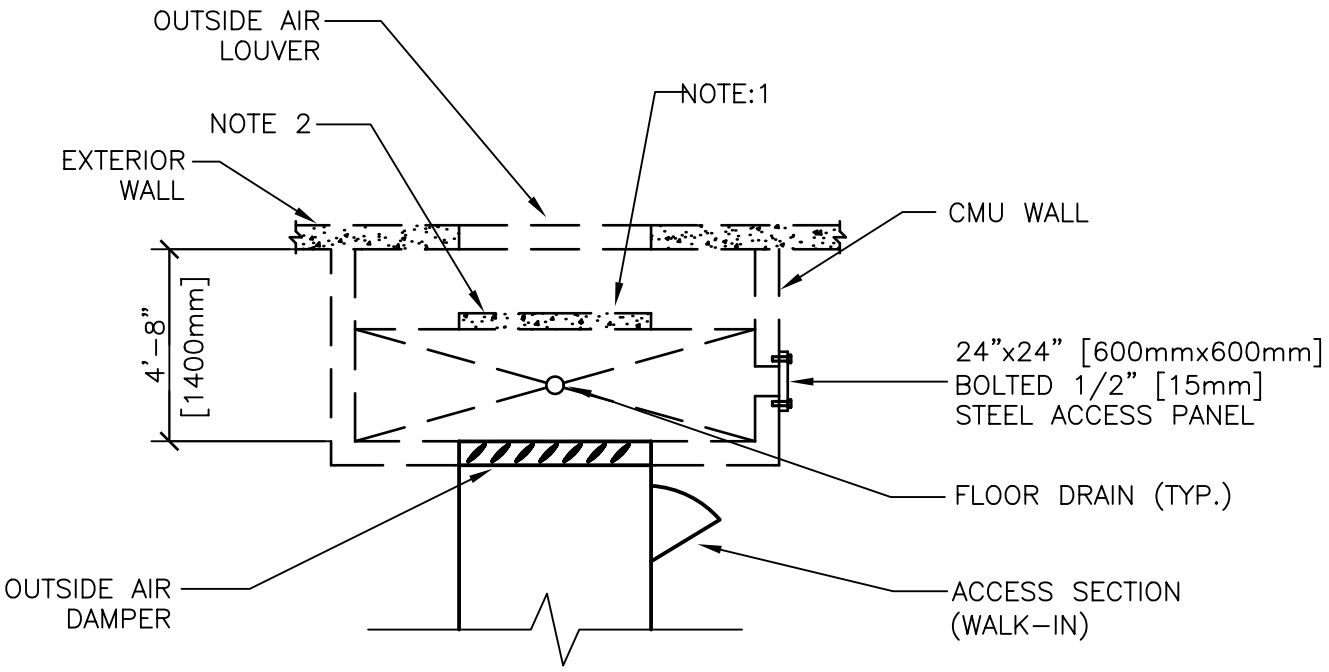

DETAIL KEYNOTES:

1. THE DESIGN AND SUPPORTING DOCUMENTATION FOR THE BLAST RESISTANT CONCRETE WALL SHALL BE COORDINATED AND APPROVED BY A REGISTERED PROFESSIONAL STRUCTURAL ENGINEER SPECIALIZING IN BLAST RESISTANT CONSTRUCTION.

2. LIMIT AIR VELOCITY TO 800 FPM [4.0 m/s] THRU PLENUM.

OUTSIDE AIR INTAKE FOR AIR HANDLER UNIT FOR MISSION CRITICAL FACILITY

#

NTS

Department of Veterans Affairs

DETAIL TITLE / OUTSIDE AIR INTAKE FOR AIR HANDLER UNIT FOR MISSION CRITICAL FACILITY

SCALE :NONE

DATE ISSUED: DECEMBER 2008 CAD DETAIL NO.: SD233100-23.DWG

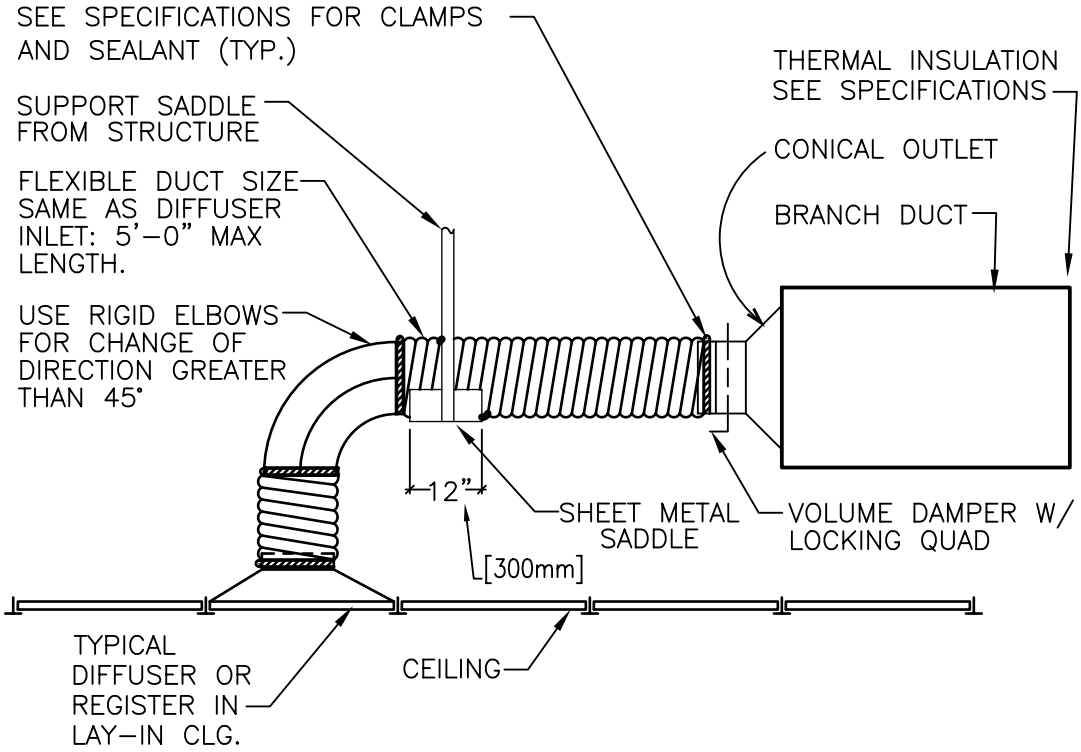

NOTE:
THE USE OF FLEXIBLE AIR DUCT CONNECTORS ARE NOT PERMITTED FOR THE DEDICATED AHU SERVING THE SURGICAL SUITE.

FLEXIBLE AIR DUCT CONNECTOR

#

NTS

Department of Veterans Affairs

DETAIL TITLE / FLEXIBLE AIR DUCT CONNECTOR

SCALE :NONE

DATE ISSUED : DECEMBER 2008 CADD DETAIL NO. : SD233100-24.DWG

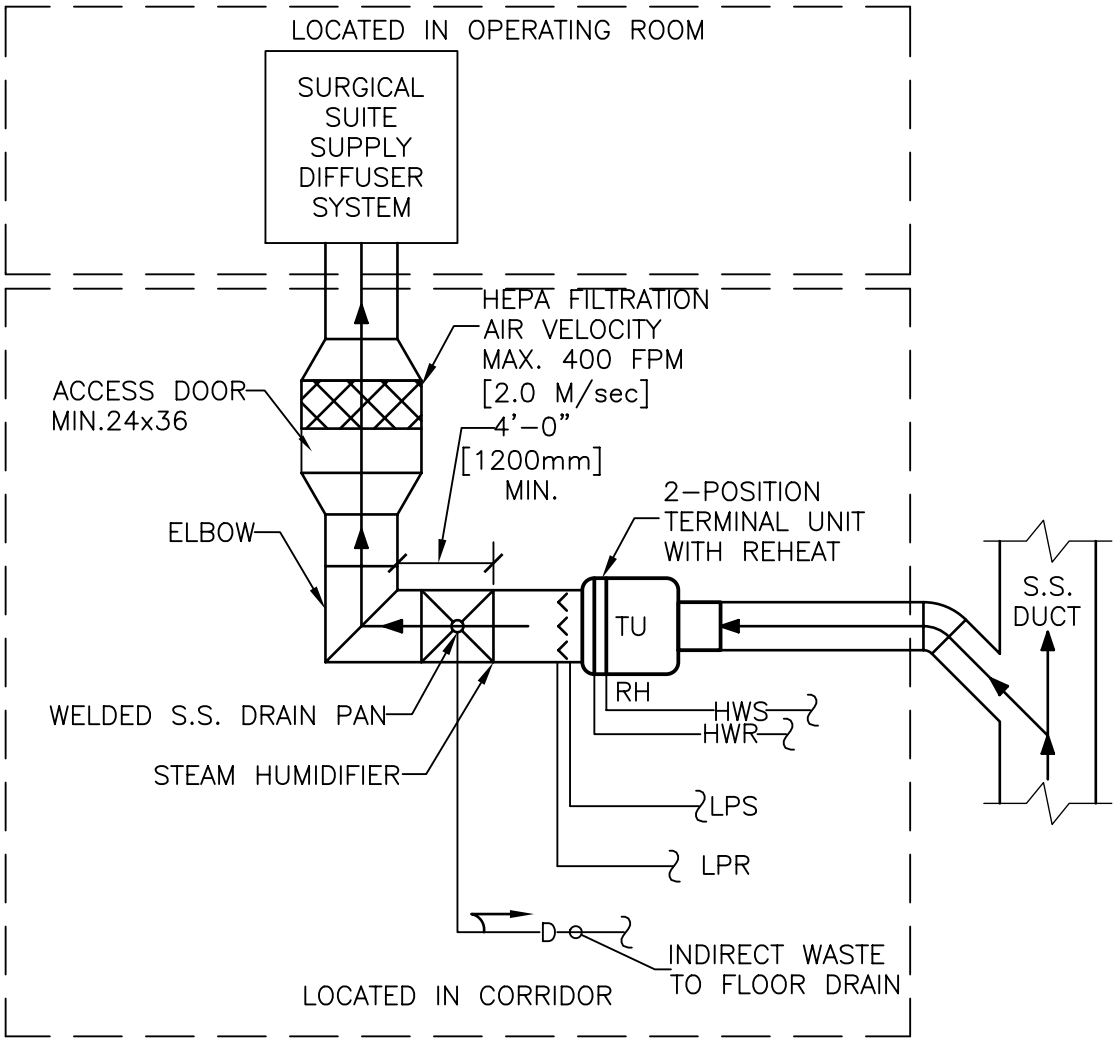

NOTES:
1.ALL DUCTWORK IS STAINLESS STEEL

SUPPLY DUCT DETAIL - OPERATING ROOM

#

NTS

DESIGNERS NOTES:
1.PROVIDE 2 FULL CROSS SECTIONS THRU EACH OR.

Department of Veterans Affairs

DETAIL TITLE / SUPPLY DUCT TAKEOFF DETAIL - OPERATING ROOM

SCALE :NONE

DATE ISSUED :DECEMBER 2008

CADD DETAIL NO. : SD233100-25.DWG

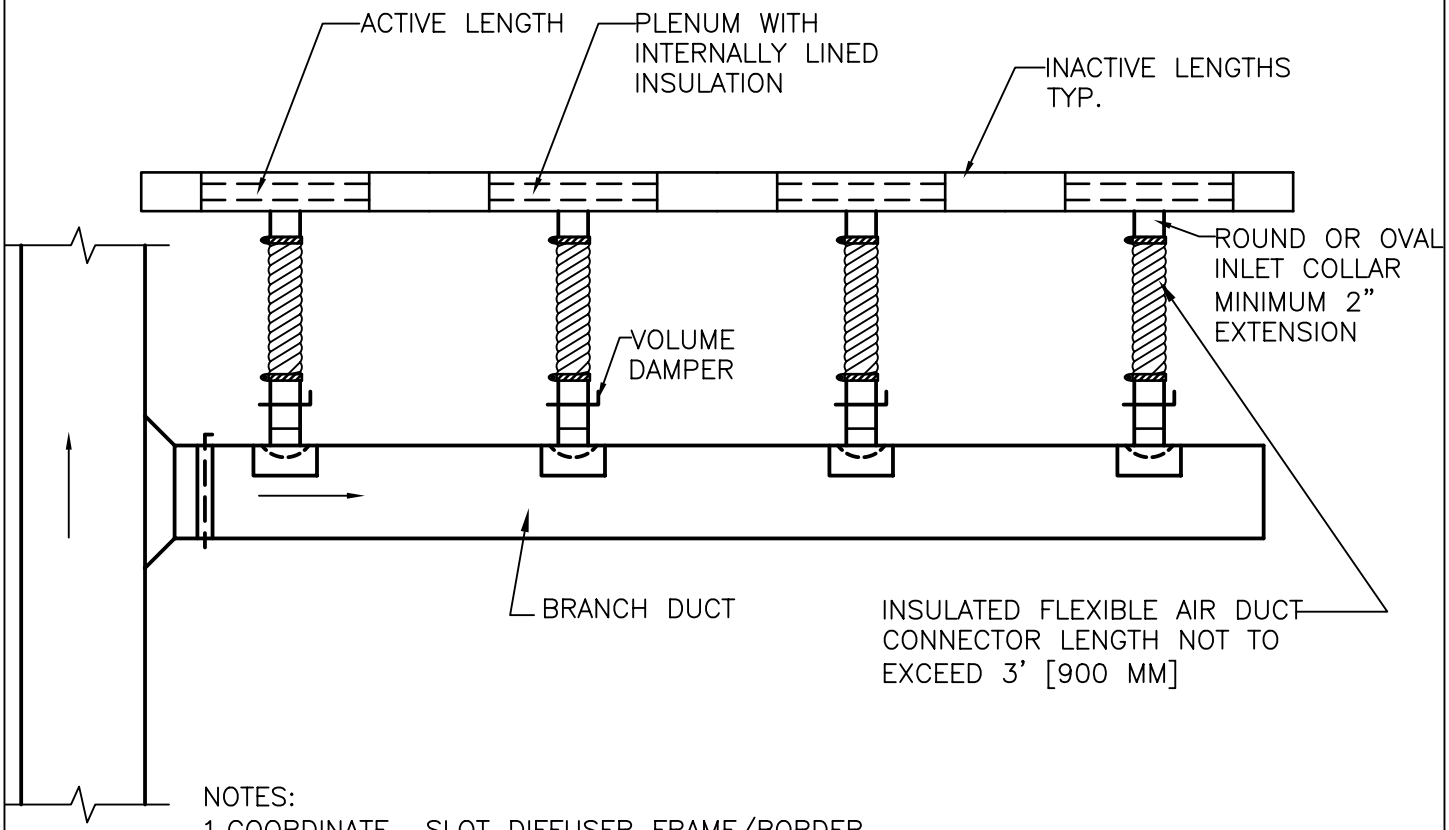

NOTES:

1. COORDINATE SLOT DIFFUSER FRAME/BORDER TYPE AND END BORDER CONFIGURATION WITH CEILING TYPE.

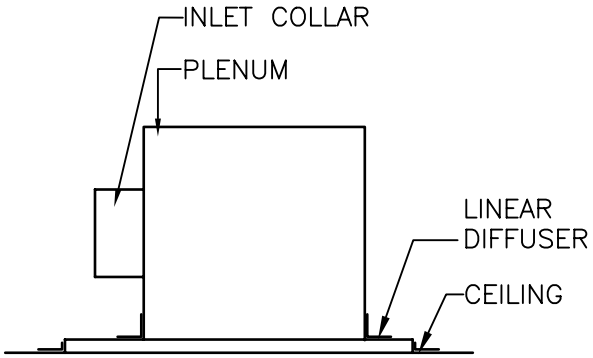

LINEAR SLOT DIFFUSER

#

NTS

Department of Veterans Affairs

DETAIL TITLE / LINEAR SLOT DIFFUSERS

SCALE :NONE

DATE ISSUED: DECEMBER 2008 CAD DETAIL NO.: SD233100-26.DWG

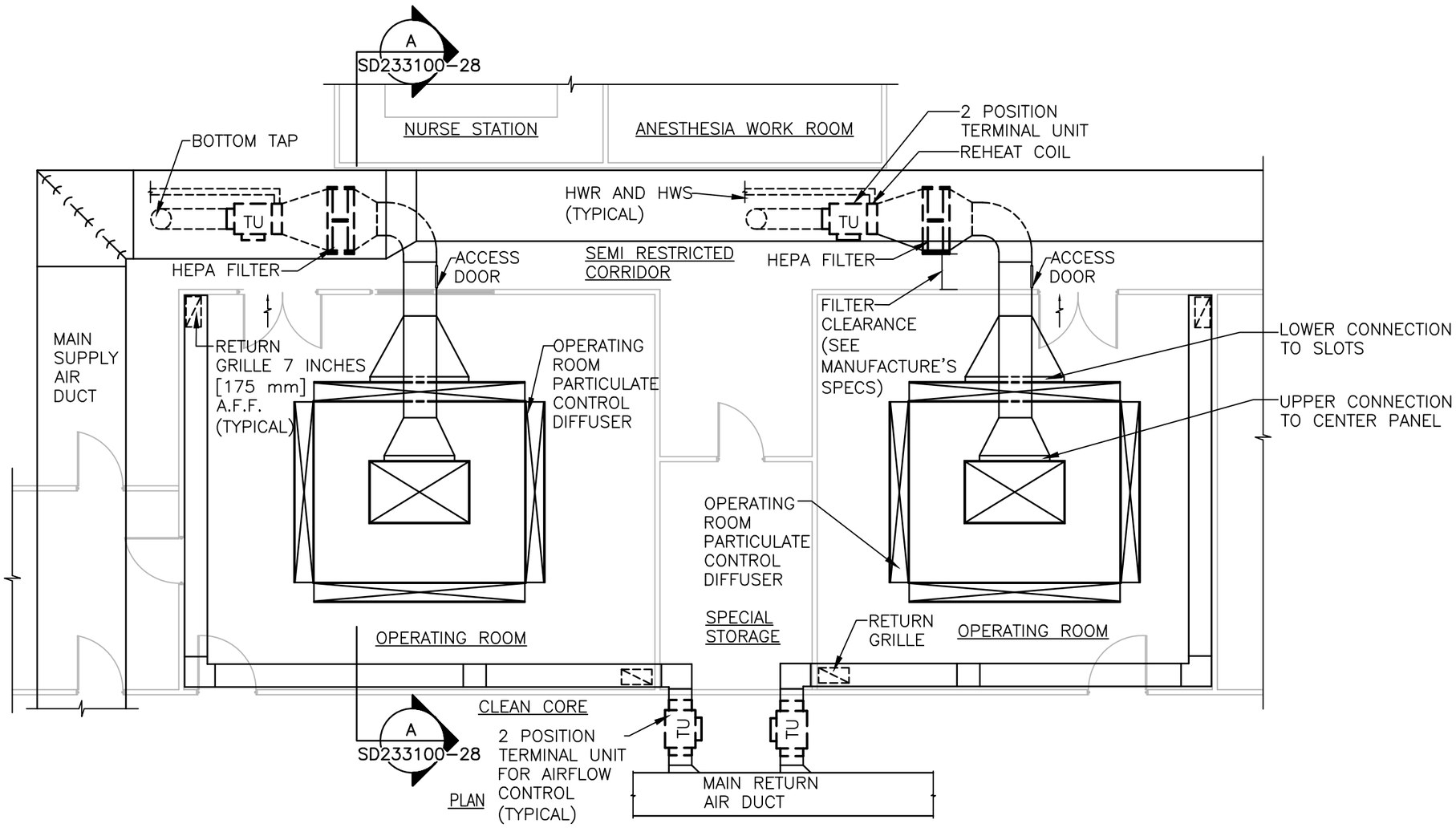

NOTES: 1. ROOMS SHOWN ARE TYPICAL FOR VA DESIGN GUIDE PLATE FOR SURGERY. REFER TO ACTUAL FLOOR PLANS FOR SIZE AND LOCATION OF ROOMS.

2. THE AIR DISTRIBUTION LAYOUT IS APPLICABLE TO THE CYSTOSCOPY ROOM WHEN LOCATED WITHIN THE SURGERY SUITE.

OPERATING ROOM HVAC SYSTEM (TYPICAL)

NTS

DETAIL TITLE / OPERATING ROOM HVAC SYSTEM (TYPICAL)

SCALE :NONE

DATE ISSUED :MARCH 2010

CADD DETAIL NO. SD233100-27.DWG

Department of Veterans Affairs

HEPA FILTER SIZING

FILTER IN SECTION VIEW	AIRFLOW RANGE		NOMINAL HEPA SIZE		NO. REQ.	APPROXIMATE OVERALL HOUSING SIZE		NET MAX FACE VELOCITY		AIR SIDE PRESSURE DROP			
										MAX INITIAL RESISTANCE		MAX CHANGE OUT RESISTANCE	
	CFM	(L/S)	INxINxIN	(mmxmmxmm)		INxINxIN	(mmxmmxmm)	FPM	(M/S)	IN WG	[Pa]	IN WG	[Pa]
	0–230	0–109	12x12x12	305x305x305	1	15x15x21	380x380x530	250	2	1	340	1.5	370
	230–500	109–236	24x12x12	610x305x305	1	24x15x21	610x380x530	250	2	1	340	1.5	370
	500–1100	236–519	24x24x12	610x610x305	1	24x27x21	610x685x530	250	2	1	250	1.5	370
	500–1100	236–519	24x12x12	610x305x305	2	48x15x21	1220x380x530	250	2	1	250	1.5	370
	1100–2200	519–1038	24x24x12	610x610x305	2	48x27x21	1220x685x530	250	2	1	250	1.5	370

NOTES:
1. SEE FILTER SCHEDULE SS234000–01

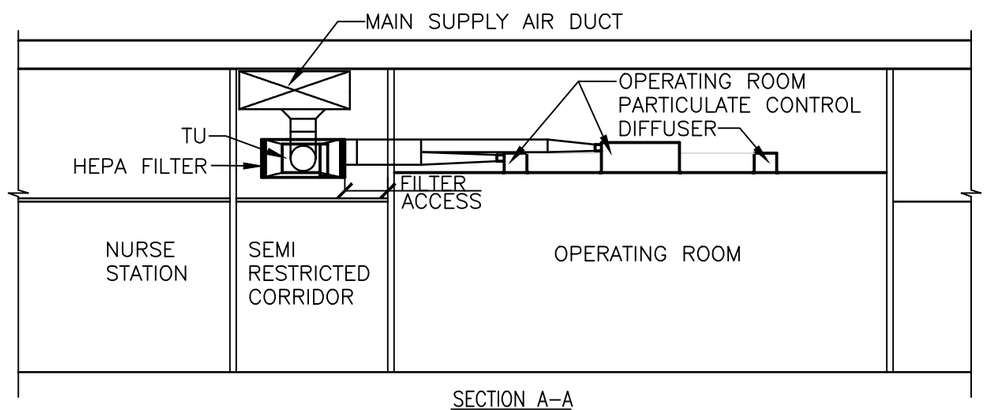

SECTION A–A

NOTES:
1.COORDINATE ACTUAL HEPA FILTER AND HOUSING SIZES WITH SELECTED MANUFACTURER.

HEPA FILTER SIZING CHART AND SURGICAL ROOM SECTION A-A

#

NTS

DESIGNER NOTES:
1.FOR GUIDANCE ONLY

DETAIL TITLE / HEPA FILTER SIZING CHART & SURGICAL ROOM SECTION A–A

SCALE :NONE

DATE ISSUED :MARCH 2010

CADD DETAIL NO. SD233100–28.DWG

Department of Veterans Affairs

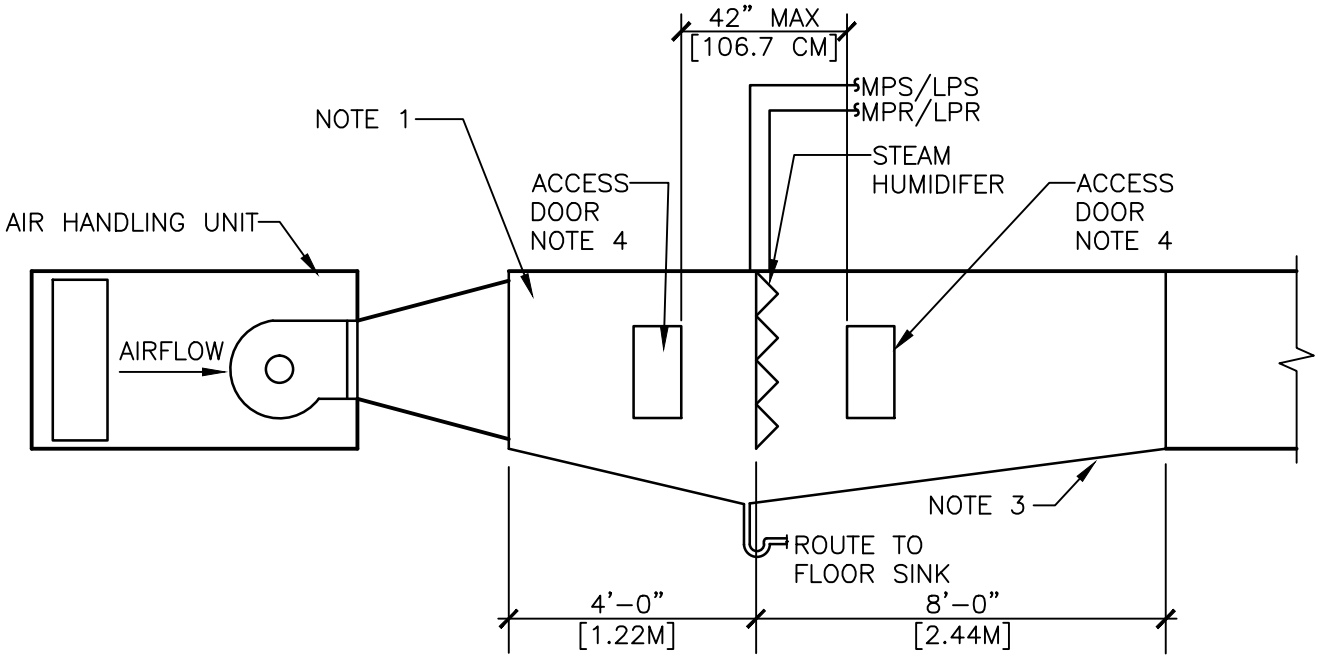

NOTES:

1. TRANSITION WELDED STAINLESS STEEL 4'[1.22M] UPSTREAM OF HUMIDIFIER AND 8' [2.44M] DOWNSTREAM OF HUMIDIFIER.

2. DETAIL ONLY APPLICABLE TO AHU'S WITHOUT AFTER FILTER DOWNSTREAM OF THE SUPPLY AIR FAN.

3. INTEGRAL STAINLESS STEEL DRAIN PAN SLOPE FROM ALL DIRECTIONS TO DRAIN CONNECTION. SLOPE .125" PER 1'-0" [0.3 CM PER 0.3 M].

4. PROVIDE MIN. 18" [45 CM] WIDE ACCESS DOOR, DIRECTLY UPSTREAM AND DOWNSTREAM OF HUMIDIFIER.

DUCT MOUNTED HUMIDIFIER

NTS

DESIGNER'S NOTE:

1. SEE DETAIL SD232213-07 FOR STEAM HUMIDIFIER PIPING CONNECTIONS.

Department of Veterans Affairs

DETAIL TITLE / DUCT MOUNTED HUMIDIFIER

SCALE :NONE

DATE ISSUED: MARCH 2010 CAD DETAIL NO.: SD233100-29.DWG

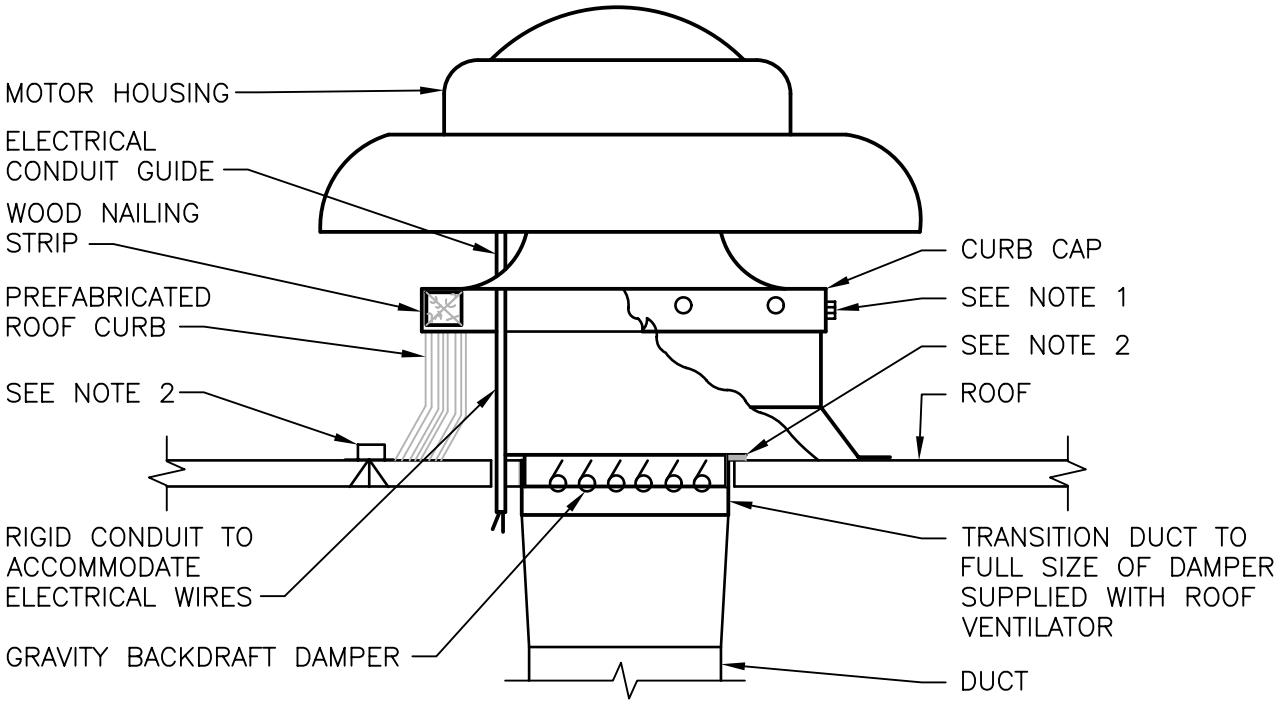

NOTE:

1. SECURE CURB CAP TO WOOD NAILING STRIP WITH 3/8" [10mm] CADMIUM PLATED LAG BOLTS NOT OVER 12" [300mm] ON CENTER.

2. SECURE ROOF CURB, DUCTWORK AND DAMPER TO ROOF WITH EXPANSION BOLTS (CONCRETE ROOF) OR RUST RESISTANT BOLTS (METAL DECK AND BAR JOIST ROOF).

3. RUN ELECTRICAL LINES THROUGH CLEARANCE HOLE PROVIDED IN GRAVITY DAMPER, THEN THROUGH VENTILATOR ELECTRICAL CONDUIT GUIDE.

POWER ROOF VENTILATOR

#

NTS

DESIGNERS NOTES:

1.PROVIDE A MOTORIZED DAMPER, IF APPLICABLE.

2.PROVIDE DIRECT DRIVE FANS FOR LOCATIONS NOT EASILY ACCESSIBLE. AS ATTIC OR PIPE BASEMENT AND LESS THAN 2 HP.

3.MINIMUM CURB HEIGHT SHALL BE 12 INCHES [300 mm]. INCREASE HEIGHT, IF REQUIRED, TO OVERCOME SNOW DRIFT.

Department of Veterans Affairs

DETAIL TITLE / POWER ROOF VENTILATOR

SCALE :NONE

DATE ISSUED: DECEMBER 2008 CAD DETAIL NO.: SD233400-01.DWG

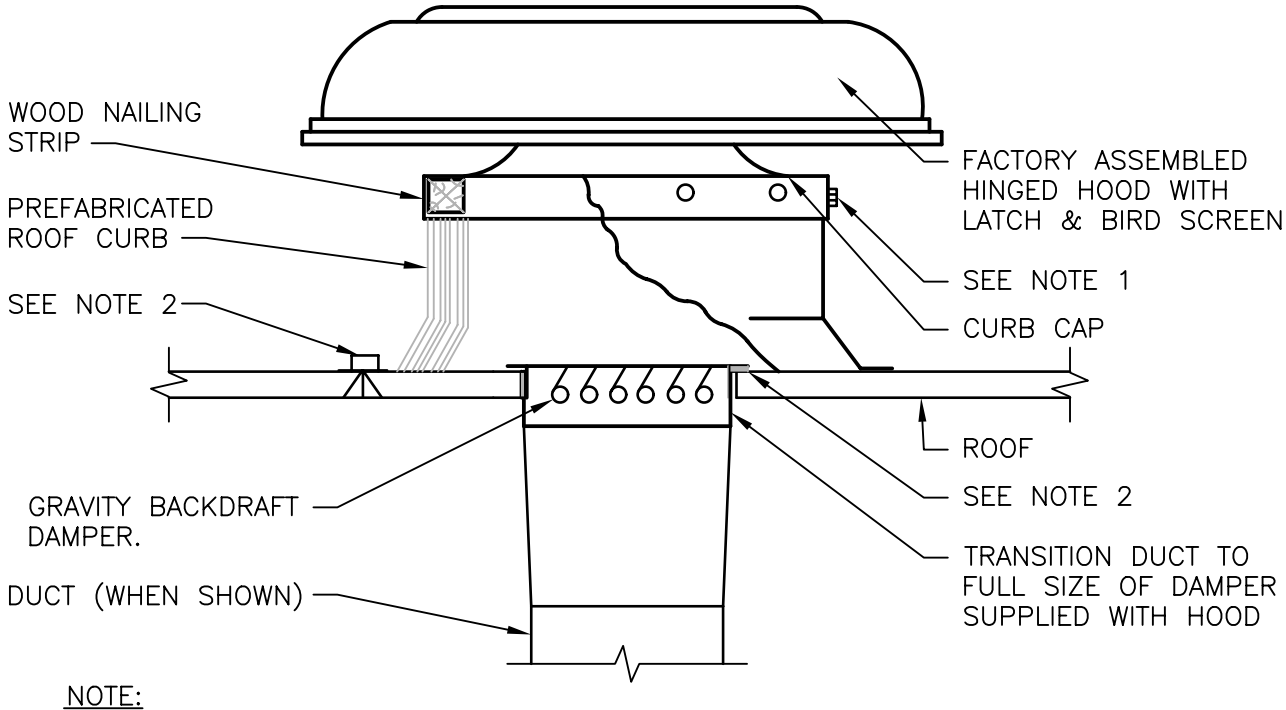

NOTE:

1. SECURE HOOD TO WOOD NAILING STRIP WITH 3/8" [10mm] CADMIUM PLATED LAG BOLTS NOT OVER 12" [300mm] ON CENTER.

2. SECURE ROOF CURB, DUCTWORK AND DAMPER TO ROOF WITH EXPANSION BOLTS (CONCRETE ROOF) OR RUST RESISTANT BOLTS (MENTAL DECK & BAR JOIST ROOF).

LOW-SILHOUETTE EXHAUST OR INTAKE HOOD

NTS

DESIGNER'S NOTE:

1.PROVIDE A MOTORIZED DAMPER, WHERE APPLICABLE.

2.MINIMUM CURB HEIGHT SHALL BE 12" [300 MM]. INCREASE HEIGHT, IF REQUIRED, TO OVER COME SNOW DRIFT

Department of Veterans Affairs

DETAIL TITLE / LOW-SILHOUETTE EXHAUST OR INTAKE HOOD

SCALE :NONE

DATE ISSUED: DECEMBER 2008 CAD DETAIL NO.: SD233400-02.DWG

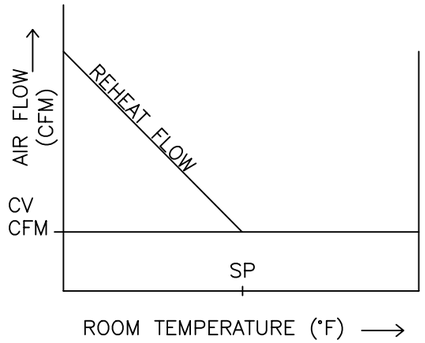

CV BOX CONTROL SEQUENCE

NO DEADBAND

A. UPON FALL IN SPACE TEMPERATURE BELOW SET POINT VALVE V–1 WILL MODULATE TO MAINTAIN SET POINT ± .5°, THE ADJUSTABLE TOLERANCE OF ± .5° HAS BEEN SELECTED TO PREVENT VALVE HUNTING
B. THE REVERSE SHALL OCCUR ON RISE IN SPACE TEMPERATURE.

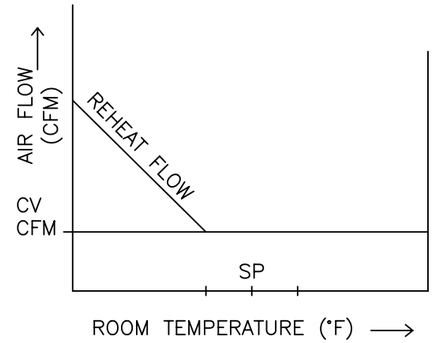

CV BOX CONTROL SEQUENCE

W/DEADBAND

A. SET POINTS SHALL SET AS FOLLOWS:
COOLING 75° F (ADJ)
HEATING 70° F (ADJ)
DEADBAND OF 5° F BETWEEN HEATING AND COOLING SET POINT WILL BE MAINTAINED
B. UPON FALL IN SPACE TEMPERATURE BELOW SET POINT VALVE V–1 WILL MODULATE TO MAINTAIN SET POINT ± .5°,THE ADJUSTABLE TOLERANCE OF ± .5° HAS BEEN SELECTED TO PREVENT VALVE HUNTING
C. THE REVERSE SHALL OCCUR ON RISE IN SPACE TEMPERATURE.

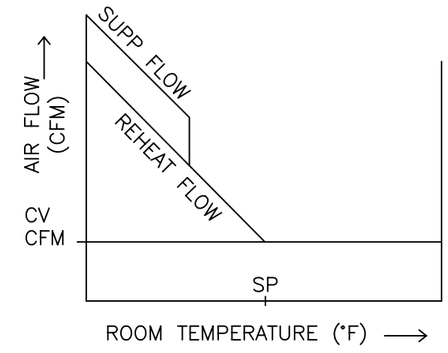

CV BOX CONTROL SEQUENCE

NO DEADBAND

A. UPON FALL IN SPACE TEMPERATURE BELOW SET POINT VALVE V–1 WILL MODULATE TO MAINTAIN SET POINT ± .5°, THE ADJUSTABLE TOLERANCE OF ± .5° HAS BEEN SELECTED TO PREVENT VALVE HUNTING
B. VALVE V–2 SHALL BE ENABLED WHEN OUTSIDE AIR FALLS BELOW 40° F (ADJ) AND VALVE V–1 HAS BEEN MODULATED OPEN ABOVE 30% (ADJ) V–2 SHALL THEN BE MODULATED TO MAINTAIN SET POINT ± .5° F. THE ADJUSTABLE TOLERANCE OF .5° F HAS BEEN SELECTED TO PREVENT VALVE HUNTING.
C. THE REVERSE SHALL OCCUR ON RISE IN AIR SPACE TEMPERATURE.

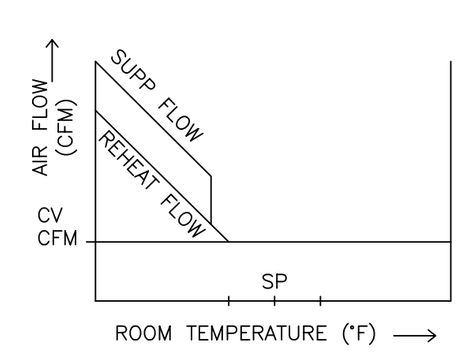

CV BOX CONTROL SEQUENCE

W/DEADBAND

A. SET POINTS SHALL SET AS FOLLOWS:
COOLING 75° F (ADJ)
HEATING 70° F (ADJ)
DEADBAND OF 5° F BETWEEN HEATING AND COOLING SET POINT WILL BE MAINTAINED
B. UPON FALL IN SPACE TEMPERATURE BELOW SET POINT VALVE V–1 WILL MODULATE TO MAINTAIN SET POINT ± .5°,
THE ADJUSTABLE TOLERANCE OF ± .5° HAS BEEN SELECTED TO PREVENT VALVE HUNTING
C. VALVE V–2 SHALL BE ENABLED WHEN OUTSIDE AIR FALLS BELOW 40° F (ADJ) AND VALVE V–1 HAS BEEN MODULATED OPEN ABOVE 30% (ADJ) V–2 SHALL THEN BE MODULATED TO MAINTAIN SET POINT ± .5° F. THE ADJUSTABLE TOLERANCE OF .5° F HAS BEEN SELECTED TO PREVENT VALVE HUNTING.
D. THE REVERSE SHALL OCCUR ON RISE IN SPACE TEMPERATURE.

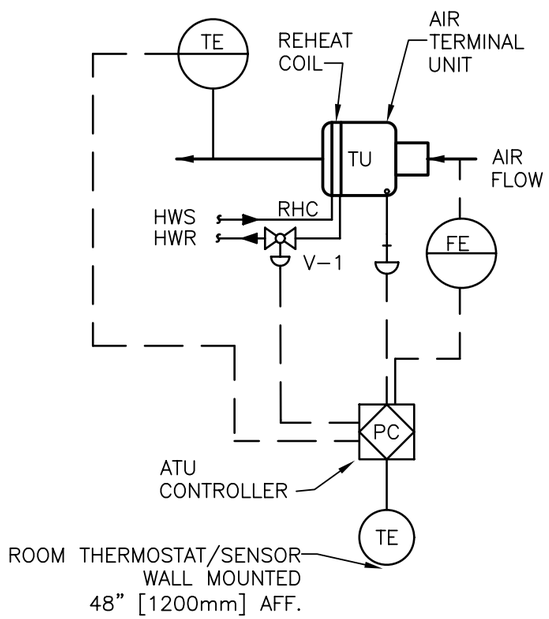

NO SUPPLEMENTAL HEATING

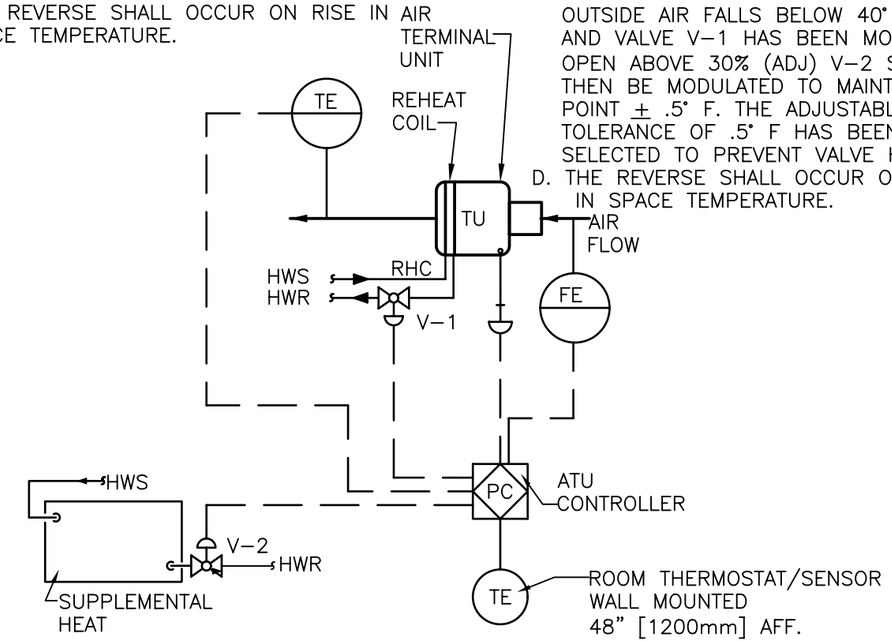

WITH SUPPLEMENTAL HEATING

CONSTANT VOLUME AIR TERMINAL UNIT CONTROL DIAGRAM

NTS

DETAIL TITLE / CONSTANT VOLUME AIR TERMINAL UNIT CONTROL DIAGRAM

SCALE :NONE

DATE ISSUED: DECEMBER 2008

CAD DETAIL NO.: SD233600-01.DWG

Department of Veterans Affairs

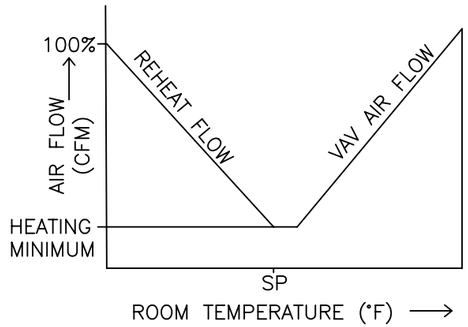

VAV BOX CONTROL SEQUENCE

NO DEADBAND

A. UPON FALL IN SPACE TEMPERATURE THE VAV DAMPER WILL MODULATE TO MINIMUM POSITION.
B. UPON FURTHER DROP IN SPACE TEMPERATURE VALVE V–1 WILL MODULATE TO MAINTAIN SET POINT ± .5° F. THE ADJUSTABLE TOLERANCE OF ± .5° F HAS BEEN SELECTED TO PREVENT VALVE HUNTING
C. THE REVERSE SHALL OCCUR ON THE RISE IN SPACE TEMPERATURE.

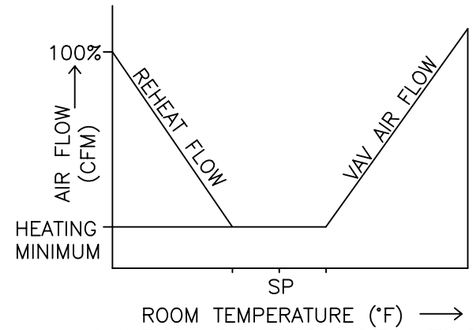

VAV BOX CONTROL SEQUENCE

W/DEADBAND

A. SET POINTS SHALL BE SET AS FOLLOWS:
COOLING 75°F (ADJ)
HEATING 70°F(ADJ)
DEADBAND OF 5° F BETWEEN HEATING AND COOLING SET POINTS WILL BE MAINTAINED.
B. UPON FALL IN SPACE TEMPERATURE THE VAV DAMPER WILL MODULATE TO MINIMUM POSITION.
C. UPON FURTHER DROP IN SPACE TEMPERATURE VALVE V–1 WILL MODULATE TO MAINTAIN SET POINT ± .5° F. THE ADJUSTABLE TOLERANCE OF ± .5° F HAS BEEN SELECTED TO PREVENT VALVE HUNTING
D. THE REVERSE SHALL OCCUR ON THE RISE IN SPACE TEMPERATURE.

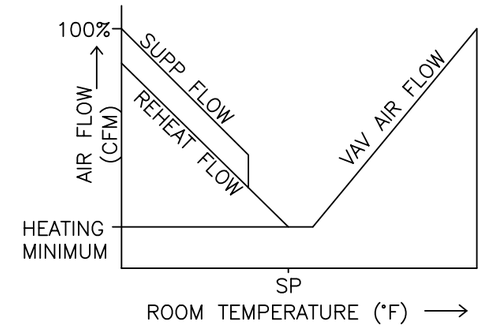

VAV BOX CONTROL SEQUENCE

NO DEADBAND

A. UPON FALL IN SPACE TEMPERATURE THE VAV DAMPER WILL MODULATE TO MINIMUM POSITION.
B. UPON FURTHER DROP IN SPACE TEMPERATURE VALVE V–1 WILL MODULATE TO MAINTAIN SET POINT ± .5° F. THE ADJUSTABLE TOLERANCE OF ± .5° F HAS BEEN SELECTED TO PREVENT VALVE HUNTING
C. VALVE V–2 SHALL BE ENABLED WHEN OUTSIDE AIR FALLS BELOW 40° F (ADJ) AND VALVE V–1 HAS BEEN MODULATED OPEN ABOVE 30% (ADJ). VALVE V–2 SHALL MAINTAIN SET POINT ± .5° F. THE ADJUSTABLE TOLERANCE OF ± .5°F HAS BEEN SELECTED TO PREVENT VALVE HUNTING. THE REVERSE SHALL OCCUR ON A RISE IN SPACE TEMPERATURE.

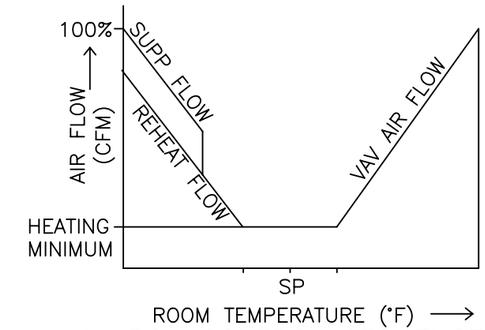

VAV BOX CONTROL SEQUENCE

W/DEADBAND

A. SET POINTS SHALL BE SET AS FOLLOWS:
COOLING 75°F (ADJ)
HEATING 70°F(ADJ)
DEADBAND OF 5° F BETWEEN HEATING AND COOLING SET POINTS WILL BE MAINTAINED.
B. UPON FALL IN SPACE TEMPERATURE THE VAV DAMPER WILL MODULATE TO MINIMUM POSITION.
C. UPON FURTHER DROP IN SPACE TEMPERATURE VALVE V–1 WILL MODULATE TO MAINTAIN SET POINT ± .5° F. THE ADJUSTABLE TOLERANCE OF ± .5° F HAS BEEN SELECTED TO PREVENT VALVE HUNTING
D. VALVE V–2 SHALL BE ENABLED WHEN OUTSIDE AIR FALLS BELOW 40° F (ADJ) AND VALVE V–1 HAS BEEN MODULATED OPEN ABOVE 30% (ADJ). VALVE V–2 SHALL MAINTAIN SET POINT ± .5° F. THE ADJUSTABLE TOLERANCE OF ± .5°F HAS BEEN SELECTED TO PREVENT VALVE HUNTING.
E. THE REVERSE SHALL OCCUR ON THE RISE IN SPACE TEMPERATURE.

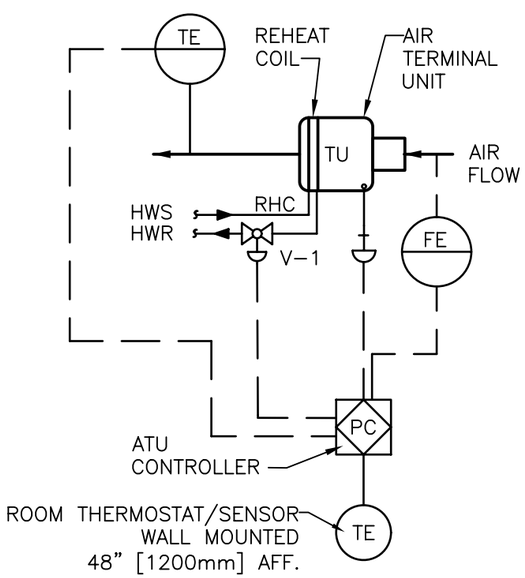

NO SUPPLEMENTAL HEATING

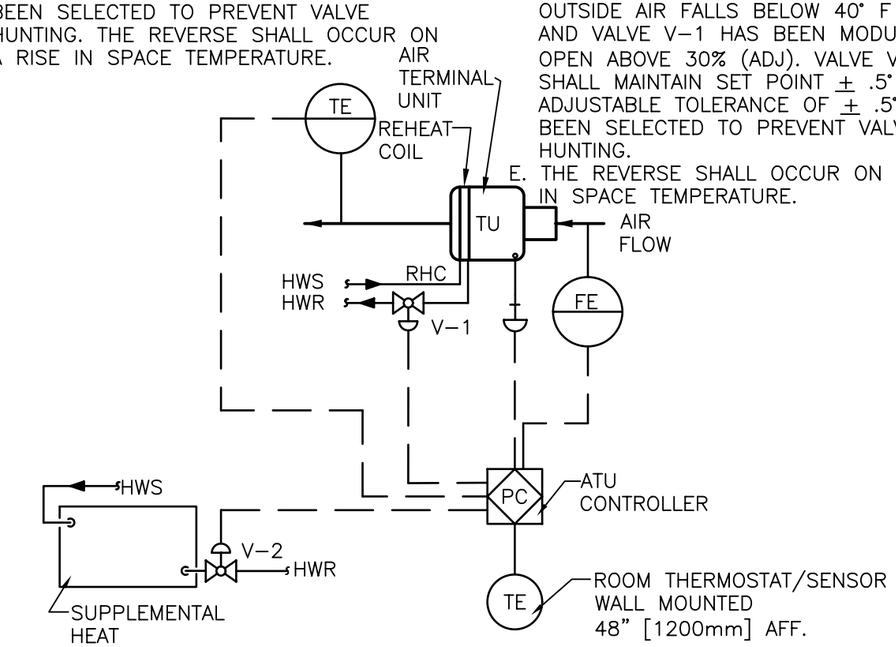

WITH SUPPLEMENTAL HEATING

VARIABLE VOLUME AIR TERMINAL UNIT CONTROL DIAGRAM

NTS

DETAIL TITLE / VARIABLE VOLUME AIR TERMINAL UNIT CONTROL DIAGRAM

SCALE :NONE

DATE ISSUED: DECEMBER 2008

CAD DETAIL NO.: SD233600-02.DWG

Department of Veterans Affairs

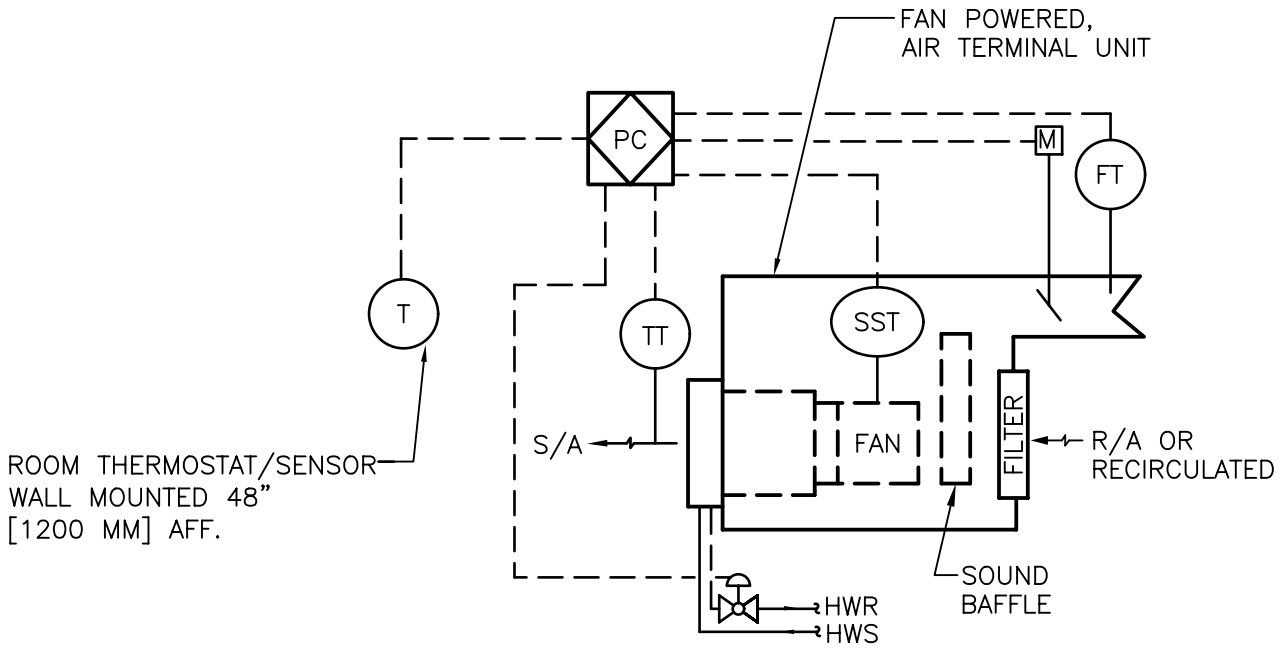

NOTES:

A. TERMINAL UNIT SHALL OPERATE ON A SCHEDULE SET BY THE ECC. THE SERIES FAN SHALL RUN CONTINUOUSLY DURING OCCUPIED HOURS. THE SPACE TEMPERATURE SHALL BE MAINTAINED BETWEEN 70° (ADJ) AND 75°F (ADJ) BY MODULATING PRIMARY AIR VOLUME AND HOT WATER CONTROL VALVE IN SEQUENCE.

B. UPON FALL IN SPACE TEMPERATURE THE PRIMARY AIR DAMPER SHALL MODULATE TO PRESET MINIMUM AIR VOLUME. UPON FURTHER FALL IN SPACE TEMPERATURE BELOW 70° F THE HOT WATER VALVE SHALL MODULATE TO OPEN POSITION TO MAINTAIN SET POINT WITHIN ±.5° (ADJ). THE TOLERANCE RANGE OF ± .5° F HAS BEEN SELECTED TO PREVENT VALVE HUNTING.

C. THE REVERSE SHALL OCCUR ON A RISE IN SPACE TEMPERATURE.

SERIES FAN POWERED AIR TERMINAL UNIT CONTROL DIAGRAM

#

NTS

Department of Veterans Affairs

DETAIL TITLE / FAN POWERED AIR TERMINAL UNIT CONTROL DIAGRAM

SCALE : NONE

DATE ISSUED : DECEMBER 2008

CADD DETAIL NO. : SD233600-03.DWG

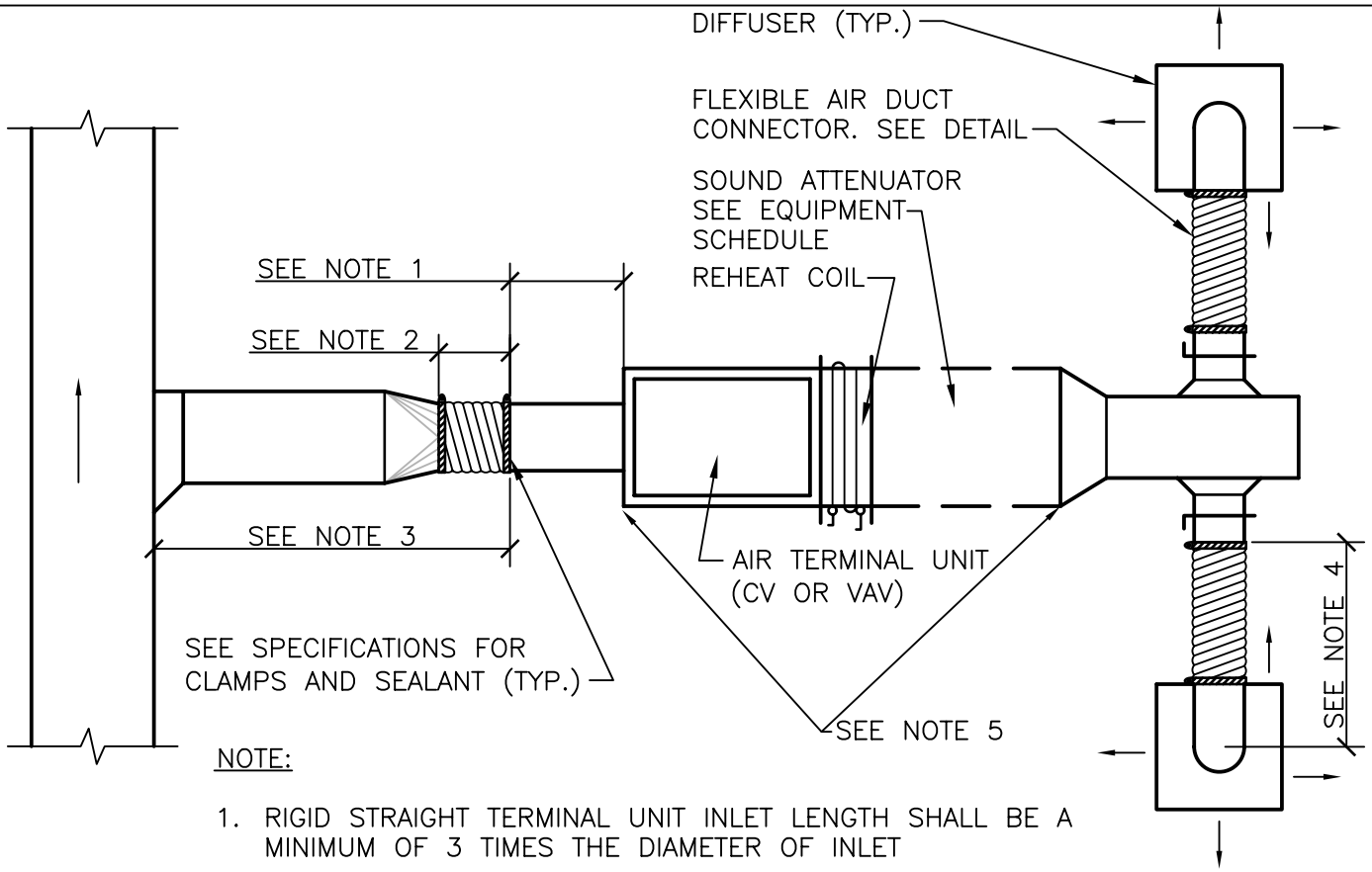

NOTE:

1. RIGID STRAIGHT TERMINAL UNIT INLET LENGTH SHALL BE A MINIMUM OF 3 TIMES THE DIAMETER OF INLET

2. A FLEXIBLE AIR DUCT CONNECTOR IS NOT MANDATORY FOR INLET TO THIS BOX, BUT ALLOWED TO ACCOMMODATE MINOR OFFSETS. MAXIMUM LENGTH 3'–0" [900mm].

3. A BRANCH DUCT SERVING AN INDIVIDUAL BOX MAY BE THE SAME SIZE AS THE BOX INLET, PROVIDED THE EQUIVALENT LENGTH OF THE BRANCH DUCT, AS SHOWN, DOES NOT EXCEED 10 FEET (3 METERS). FOR LONGER LENGTHS, INCREASE THE DUCT SIZE AND PROVIDE A DUCT TRANSITION TO MAINTAIN THE DUCT STATIC PRESSURE DROP AT OR BELOW 0.2"/100' [1.64Pa/m].

4. FLEXIBLE AIR DUCT CONNECTORS, WHEN USED FROM TERMINAL UNIT SUPPLY AIR DUCT TO DIFFUSER, SHALL NOT EXCEED 5'–0" [1500mm]. USE RIGID ELBOWS FOR CHANGE OF DIRECTION GREATER THAN 45°.

5. COMPONENT ARRANGEMENT MAY VARY BY MANUFACTURER. PROVIDE INSULATION W/VAPOR BARRIER FOR CONNECTING DUCT SECTIONS.

6. USE OF THE FLEXIBLE AIR DUCT CONNECTORS ARE NOT PERMITTED FOR THE DEDICATED AHU SERVING THE SURGICAL SUITE.

DUCT CONNECTIONS - AIR TERMINAL UNITS

#

NTS

DESIGNER'S NOTE: 1.INDICATE SOUND ATTENUATOR AS REQUIRED BY ACOUSTICAL ANALYSIS

Department of Veterans Affairs

DETAIL TITLE / DUCT CONNECTIONS – AIR TERMINAL UNITS

SCALE :NONE

DATE ISSUED: DECEMBER 2008 CAD DETAIL NO.: SD233600–04.DWG

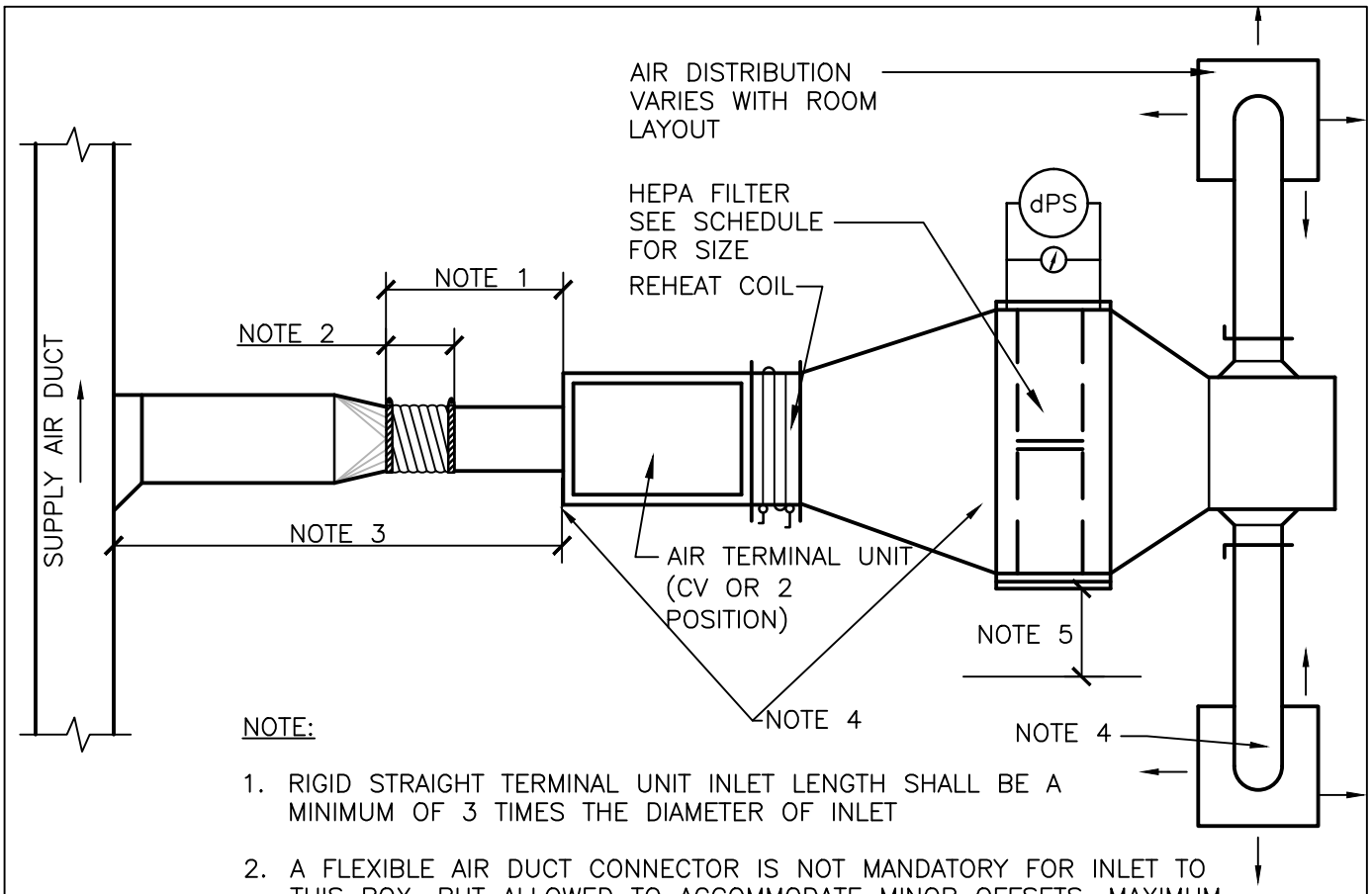

NOTE:

1. RIGID STRAIGHT TERMINAL UNIT INLET LENGTH SHALL BE A MINIMUM OF 3 TIMES THE DIAMETER OF INLET

2. A FLEXIBLE AIR DUCT CONNECTOR IS NOT MANDATORY FOR INLET TO THIS BOX, BUT ALLOWED TO ACCOMMODATE MINOR OFFSETS. MAXIMUM LENGTH 2'–0" [610mm].

3. A BRANCH DUCT SERVING AN INDIVIDUAL BOX MAY BE THE SAME SIZE AS THE BOX INLET, PROVIDED THE EQUIVALENT LENGTH OF THE BRANCH DUCT, AS SHOWN, DOES NOT EXCEED 10 FEET [3 M]. FOR LONGER LENGTHS, INCREASE THE DUCT SIZE AND PROVIDE A DUCT TRANSITION TO MAINTAIN THE DUCT STATIC PRESSURE DROP AT OR BELOW 0.2"/100' [1.6894Pa/m].

4. ALL DUCTWORK UPSTREAM AND DOWNSTREAM OF THE HEPA FILTER SHALL BE GALVANIZED STEEL,

5. PROVIDE SIDE ACCESS FOR FILTER SERVICE. SEE MANUFACTURER'S SPECIFICATION FOR CLEARANCE REQUIREMENT.

AIR TERMINAL UNITS WITH HEPA FILTER (BMT SUITE, POSITIVE ISOLATION ROOMS)

#

NTS

DESIGNER'S NOTE:1. IN LIEU OF DUCT MOUNTED HEPA FILTER, CEILING MOUNTED PANEL HEPA FILTERS MAY BE UTILIZED.
2. THIS DETAIL SHALL BE USED FOR SURGICAL SUITE ROOMS EXCLUDING OPERATING AND CYSTOSCOPY ROOMS.

Department of Veterans Affairs

DETAIL TITLE / AIR TERMINAL UNITS WITH HEPA FILTER BMT SUITE, POSITIVE ISOLATION ROOMS

SCALE :NONE

DATE ISSUED: MARCH 2010 CAD DETAIL NO.: SD233600–05.DWG

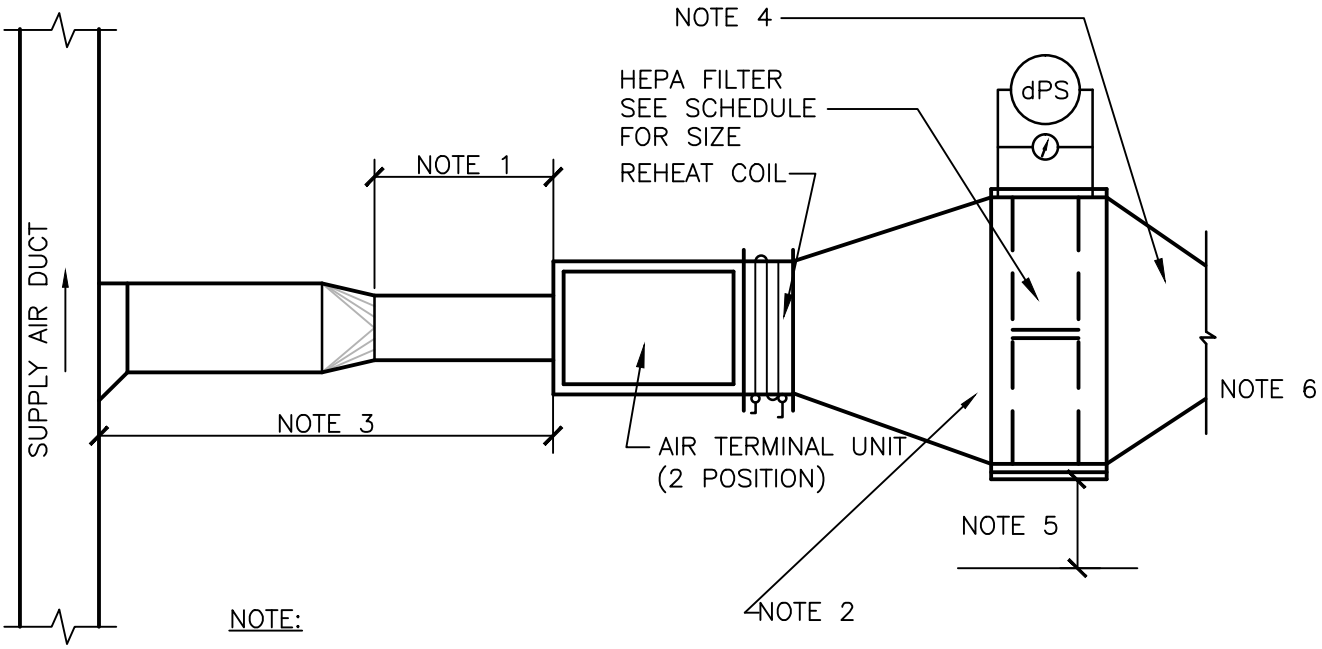

NOTE:

1. RIGID STRAIGHT TERMINAL UNIT INLET LENGTH SHALL BE A MINIMUM OF 3 TIMES THE DIAMETER OF INLET.

2. ALL DUCTWORK UPSTREAM OF THE HEPA FILTER SHALL BE GALVANIZED STEEL.

3. A BRANCH DUCT SERVING AN INDIVIDUAL BOX MAY BE THE SAME SIZE AS THE BOX INLET, PROVIDED THE EQUIVALENT LENGTH OF THE BRANCH DUCT, AS SHOWN, DOES NOT EXCEED 10 FEET [3 M]. FOR LONGER LENGTHS, INCREASE THE DUCT SIZE AND PROVIDE A DUCT TRANSITION TO MAINTAIN THE DUCT STATIC PRESSURE DROP AT OR BELOW 0.1"/100' [0.6894Pa/m].

4. ALL DUCTWORK DOWNSTREAM OF THE HEPA FILTER SHALL BE STAINLESS STEEL, PROVIDE ACCESS DOOR FOR CLEANING. SEE DETAIL SD233100–27 FOR LOCATION.

5. PROVIDE SIDE ACCESS FOR FILTER SERVICE. SEE MANUFACTURER'S SPECIFICATION FOR CLEARANCES.

6. SEE DETAIL SD233100–27 FOR CONTINUATION OF DUCTWORK.

AIR TERMINAL UNITS WITH HEPA FILTER (OPERATING AND CYSTOSCOPY ROOMS)

#

NTS

Department of Veterans Affairs

DETAIL TITLE / AIR TERMINAL UNITS WITH HEPA FILTER OPERATING AND CYSTOSCOPY ROOMS

SCALE :NONE

DATE ISSUED: MARCH 2010 CAD DETAIL NO.: SD233600–06.DWG

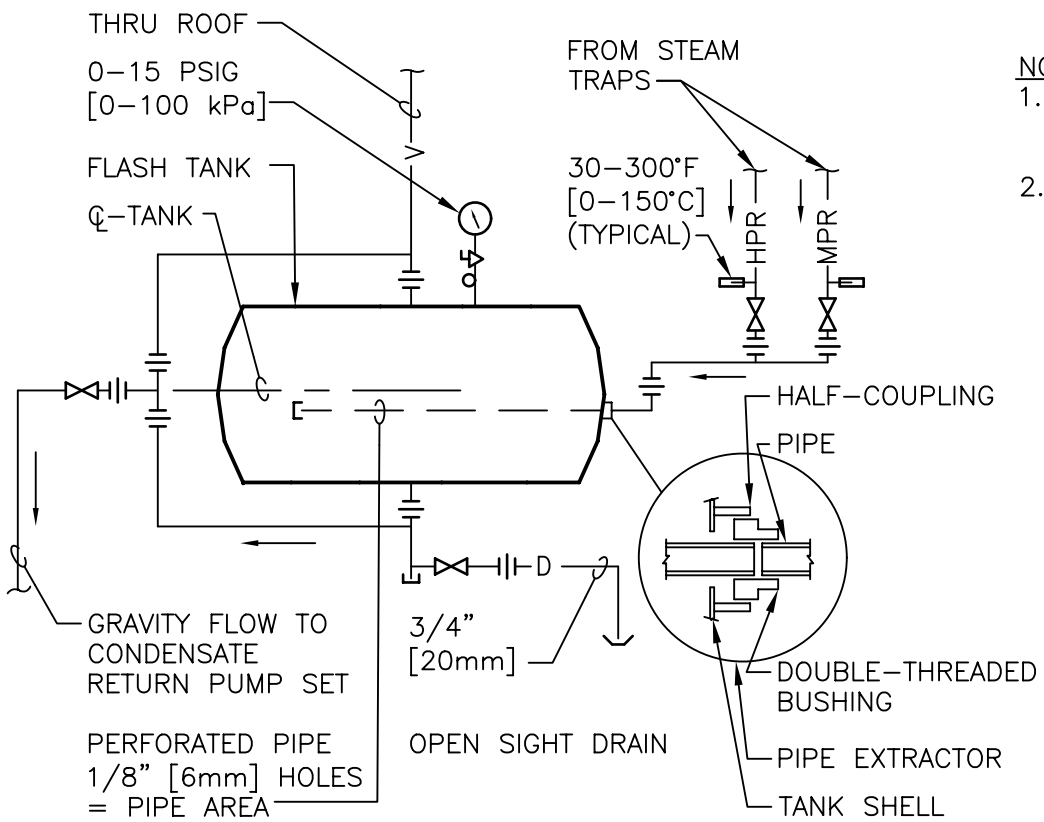

NOTES
1. PRESSURE UPSTREAM OF STEAM TRAP.
2. LENGTH x DIAMETER AT CENTER OF TANK PER THOUSAND POUNDS OF CONDENSATE. TANK AT ATMOSPHERIC PRESSURE.

STEAM PRESSURE PSIG [kPa] NOTE 1	TANK AREA SQ. FT.[SQ. M] NOTE 2
150 [1034]	3.71 [0.35]
125 [862]	3.40 [0.32]
110 [758]	3.15 [0.29]
100 [689]	3.00 [0.28]
60 [414]	2.23 [0.21]
30 [207]	1.34 [0.13]

FLASH TANK

NTS

Department of Veterans Affairs

DETAIL TITLE / FLASH TANK

SCALE :NONE

DATE ISSUED: DECEMBER 2008

CAD DETAIL NO.: SD235011–01.DWG

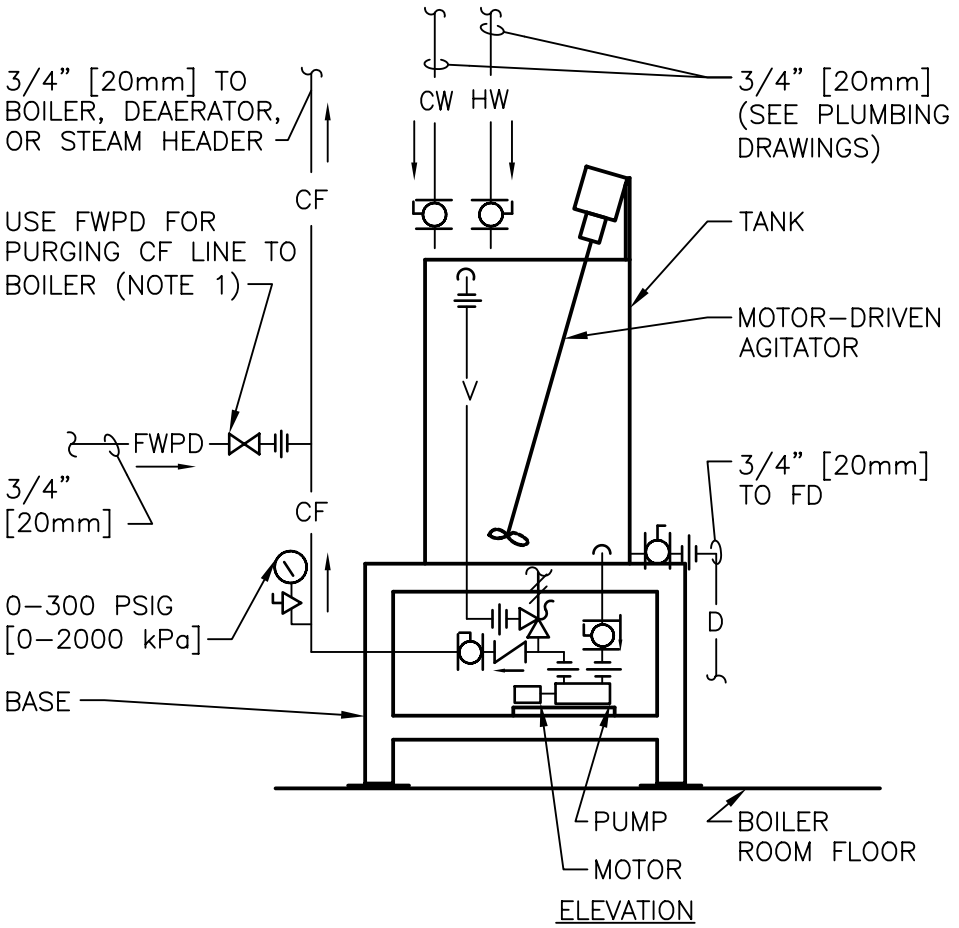

NOTES

1. DO NOT PROVIDE FWPD ON SYSTEM WHICH SERVES DEAERATOR
2. PROVIDE A SEPARATE CHEMICAL FEED SYSTEM FOR EACH BOILER, FOR THE DEAERATOR AND FOR MAIN STEAM.

1 CHEMICAL FEED SYSTEM - PUMPED TYPE

NTS

Department of Veterans Affairs

DETAIL TITLE / CHEMICAL FEED SYSTEM – PUMPED TYPE

SCALE :NONE

DATE ISSUED: DECEMBER 2008 CAD DETAIL NO.: SD235011–02.DWG

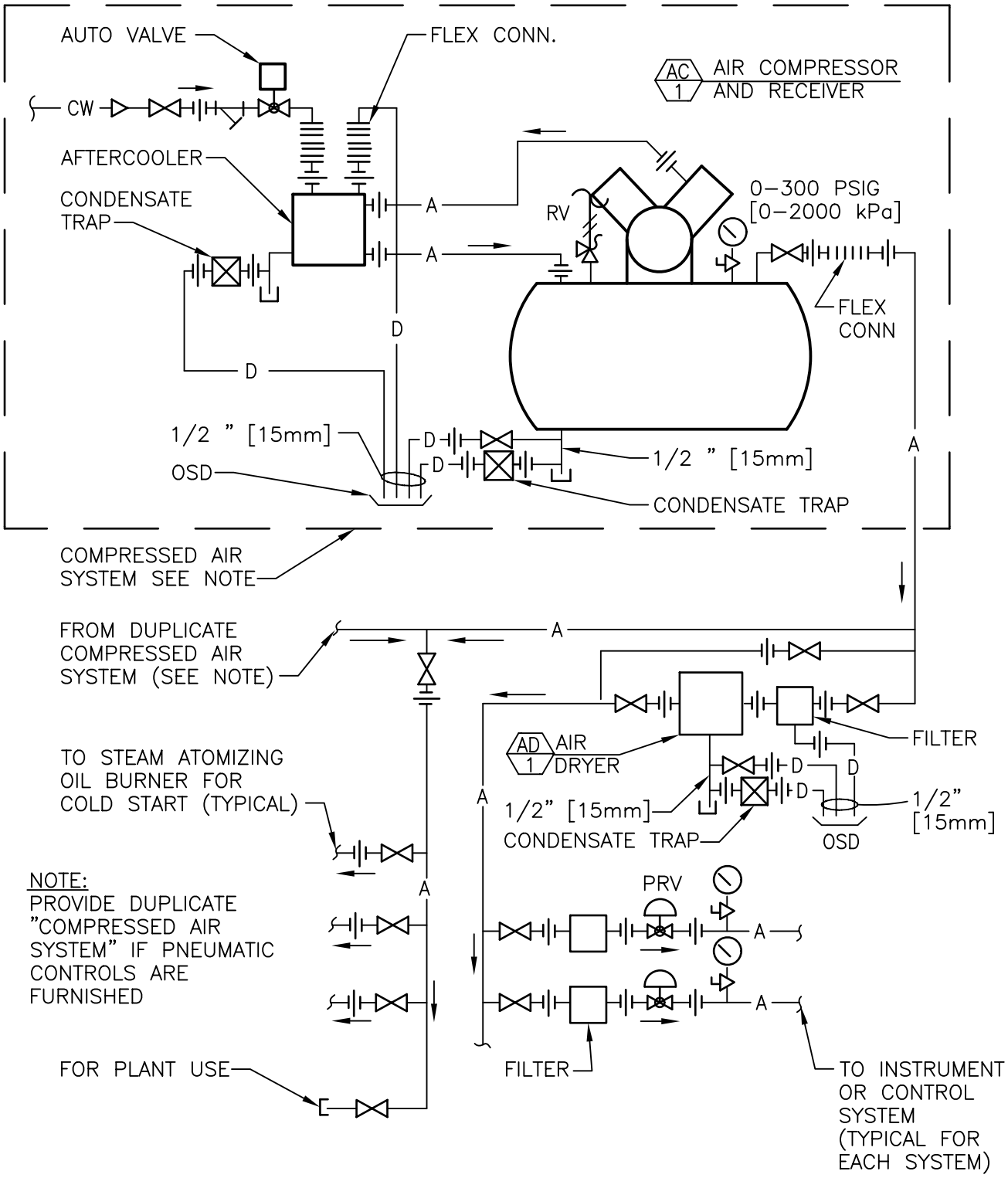

COMPRESSED AIR SYSTEM - STANDARD PIPING DIAGRAM

#

NTS

Department of Veterans Affairs

DETAIL TITLE / COMPRESSED AIR SYSTEM – STANDARD PIPING DIAGRAM

SCALE :NONE

DATE ISSUED: DECEMBER 2008 CAD DETAIL NO.: SD235011–03.DWG

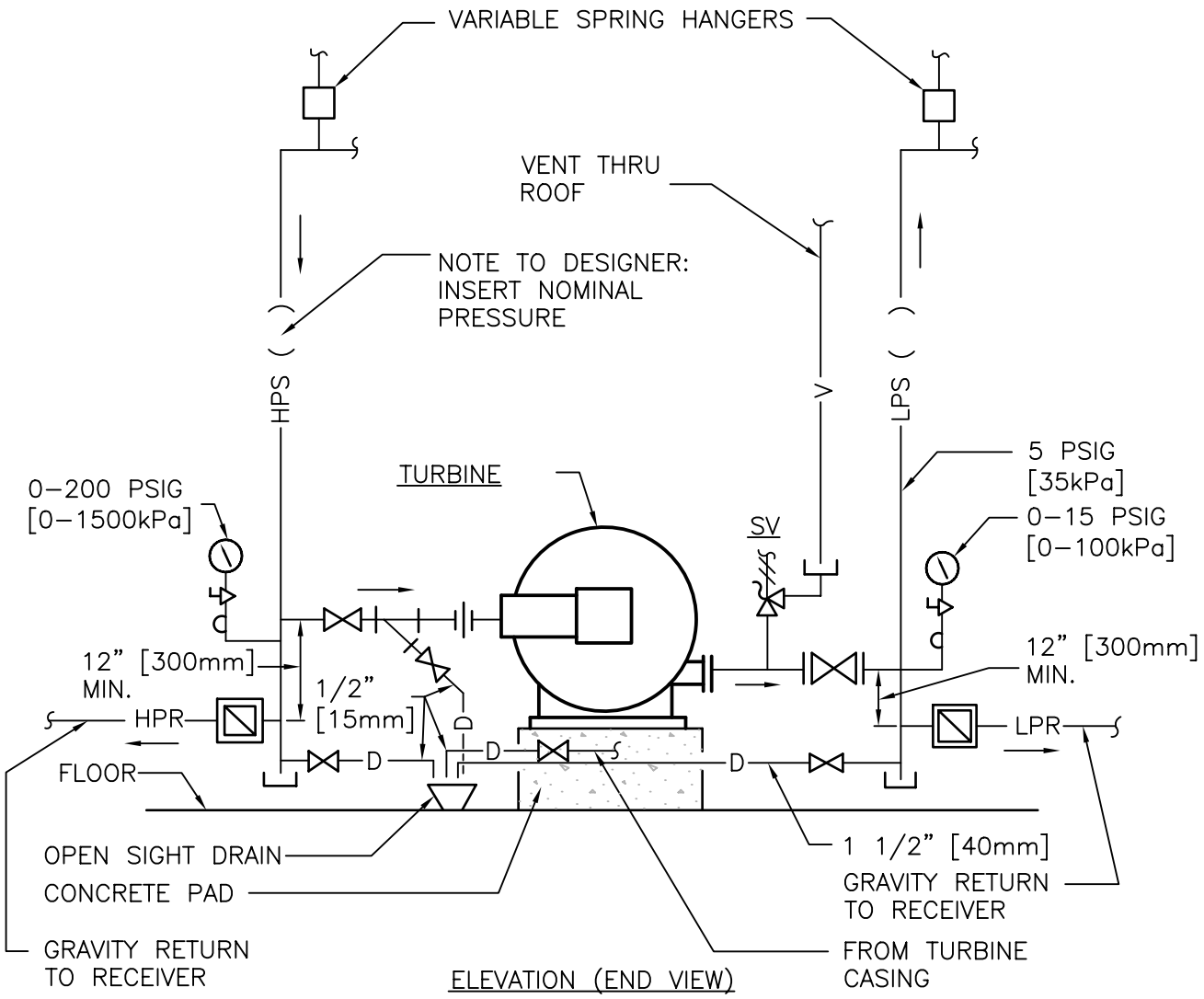

STEAM TURBINE DRIVE

#

NTS

Department of Veterans Affairs

DETAIL TITLE / STEAM TURBINE DRIVE

SCALE :NONE

DATE ISSUED :DECEMBER 2008

CADD DETAIL NO. : SD235011–04.DWG

NOTE:
TANK DESIGN SHALL BE IN CONFORMANCE WITH NATIONAL BOARD "BOILER BLOWOFF EQUIPMENT"

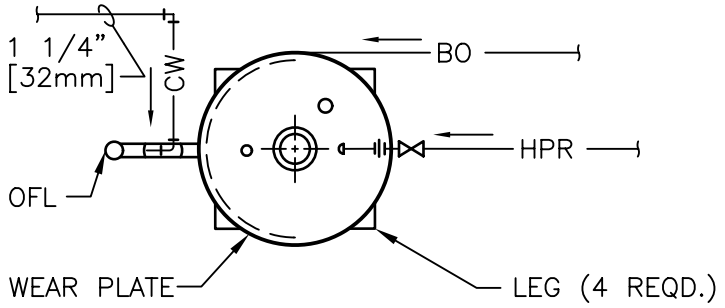

PLAN VIEW

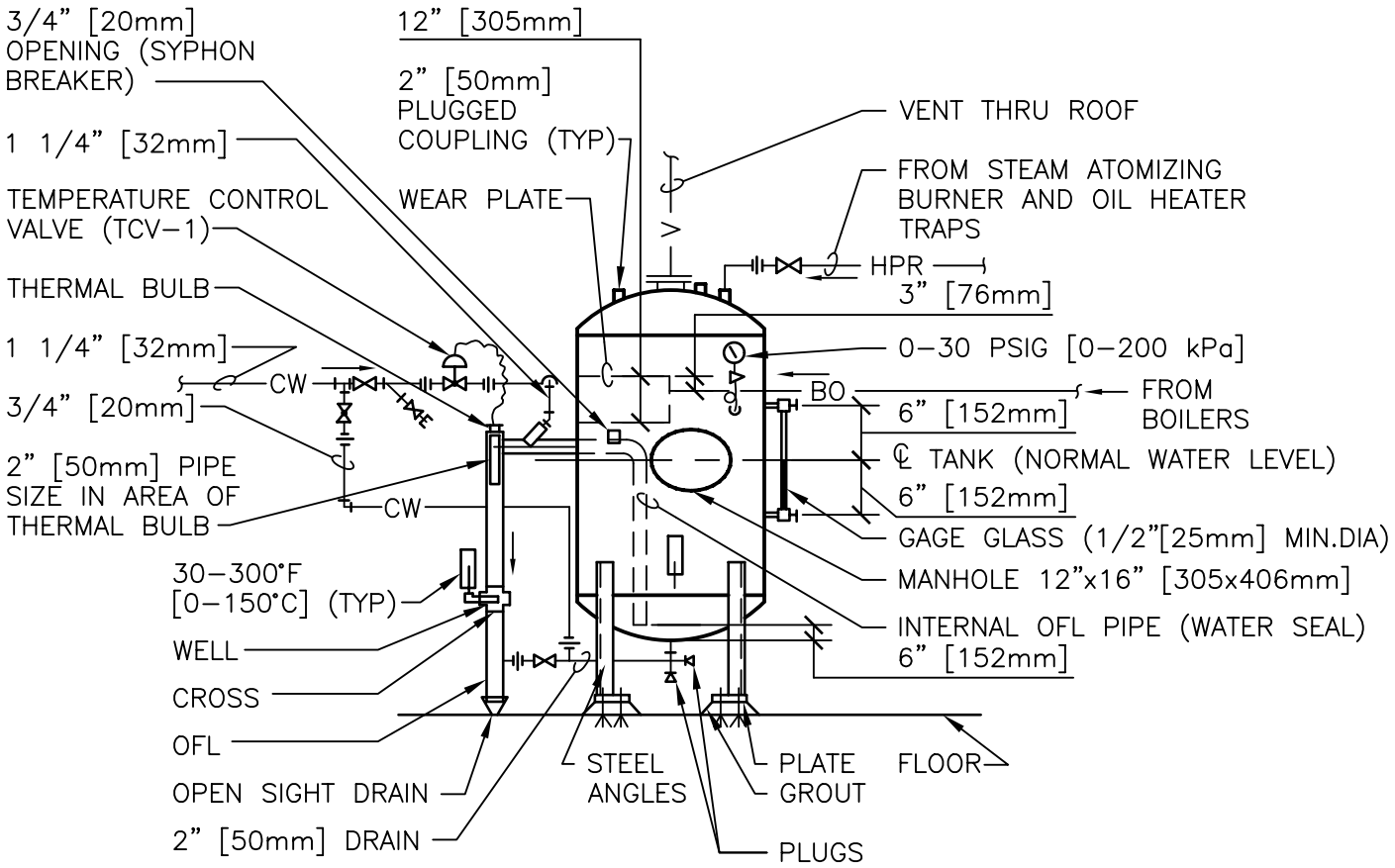

ELEVATION

BOILER BLOWOFF TANK

NTS

Department of Veterans Affairs

DETAIL TITLE / BOILER BLOWOFF TANK

SCALE :NONE

DATE ISSUED: DECEMBER 2008 CAD DETAIL NO.: SD235011-05.DWG

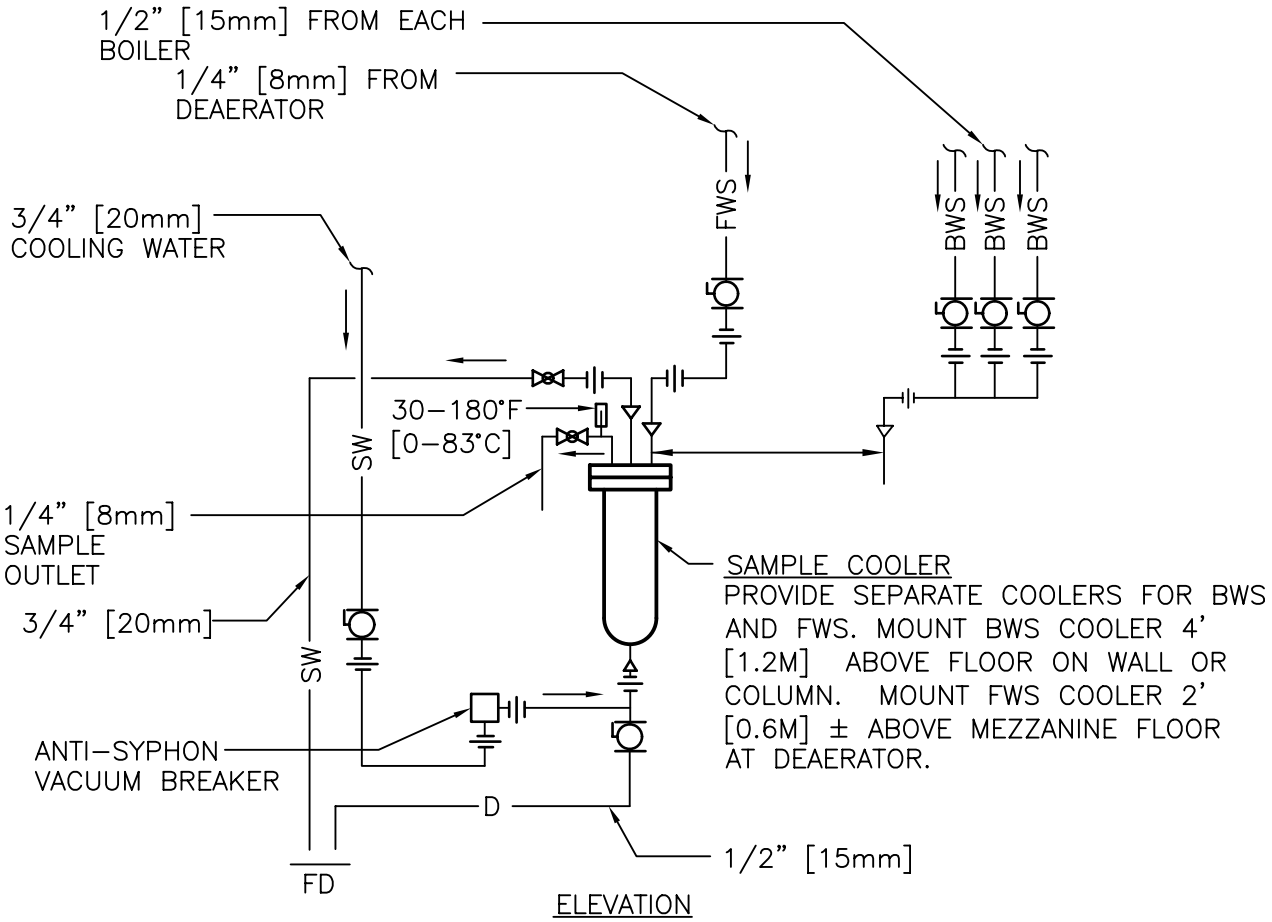

WATER SAMPLE COOLERS BOILER WATER AND FEEDWATER

#

NTS

Department of Veterans Affairs

DETAIL TITLE / WATER SAMPLE COOLERS BOILER WATER AND FEEDWATER

SCALE :NONE

DATE ISSUED :DECEMBER 2008

CADD DETAIL NO. : SD235011–06.DWG

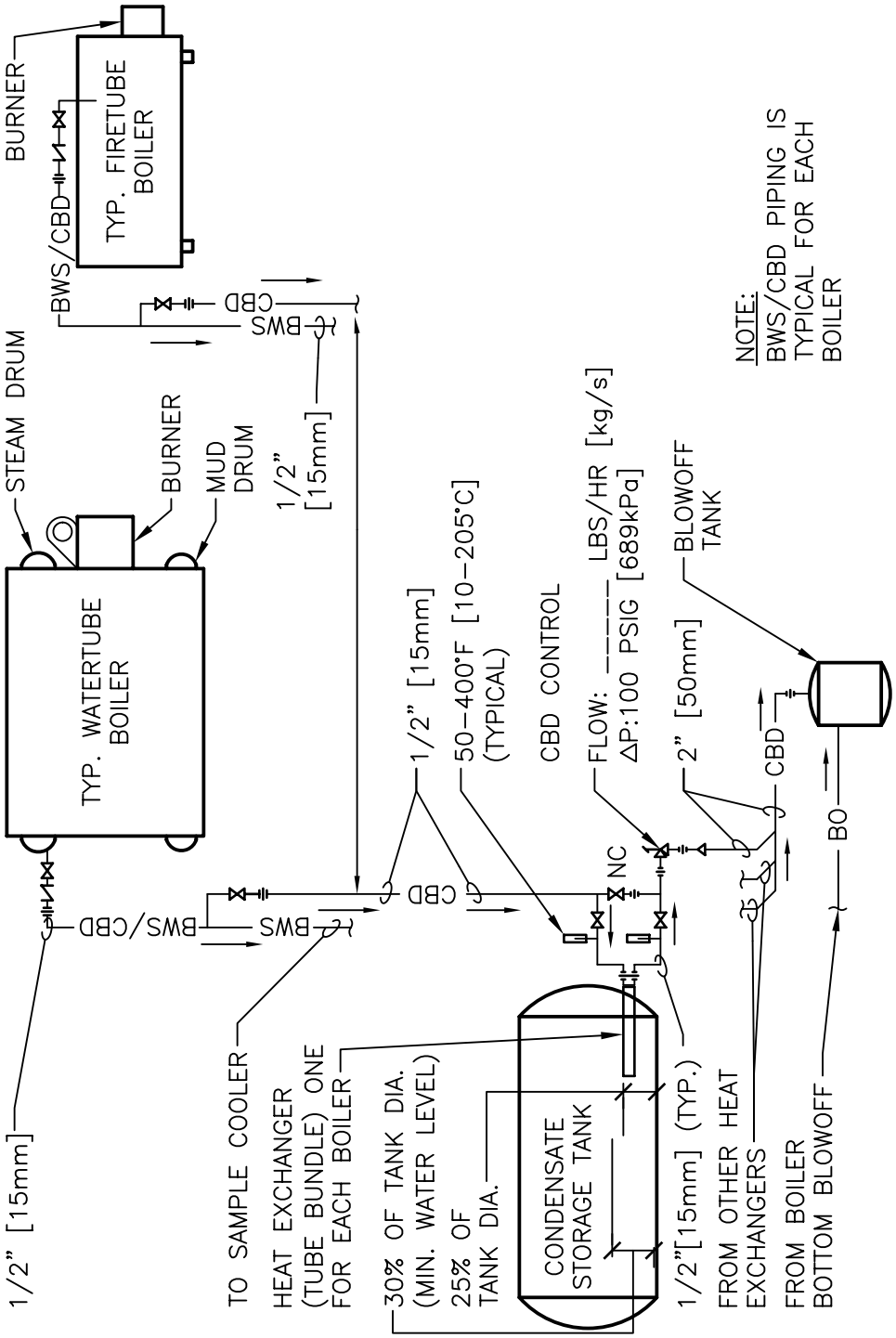

CONTINUOUS BLOWDOWN HEAT RECOVERY STANDARD PIPING DIAGRAM

NTS

#

Department of Veterans Affairs

DETAIL TITLE / CONTINUOUS BLOWDOWN HEAT RECOVERY STANDARD PIPING DIAGRAM

SCALE :NONE

DATE ISSUED: DECEMBER 2008 CAD DETAIL NO.: SD235011-07.DWG

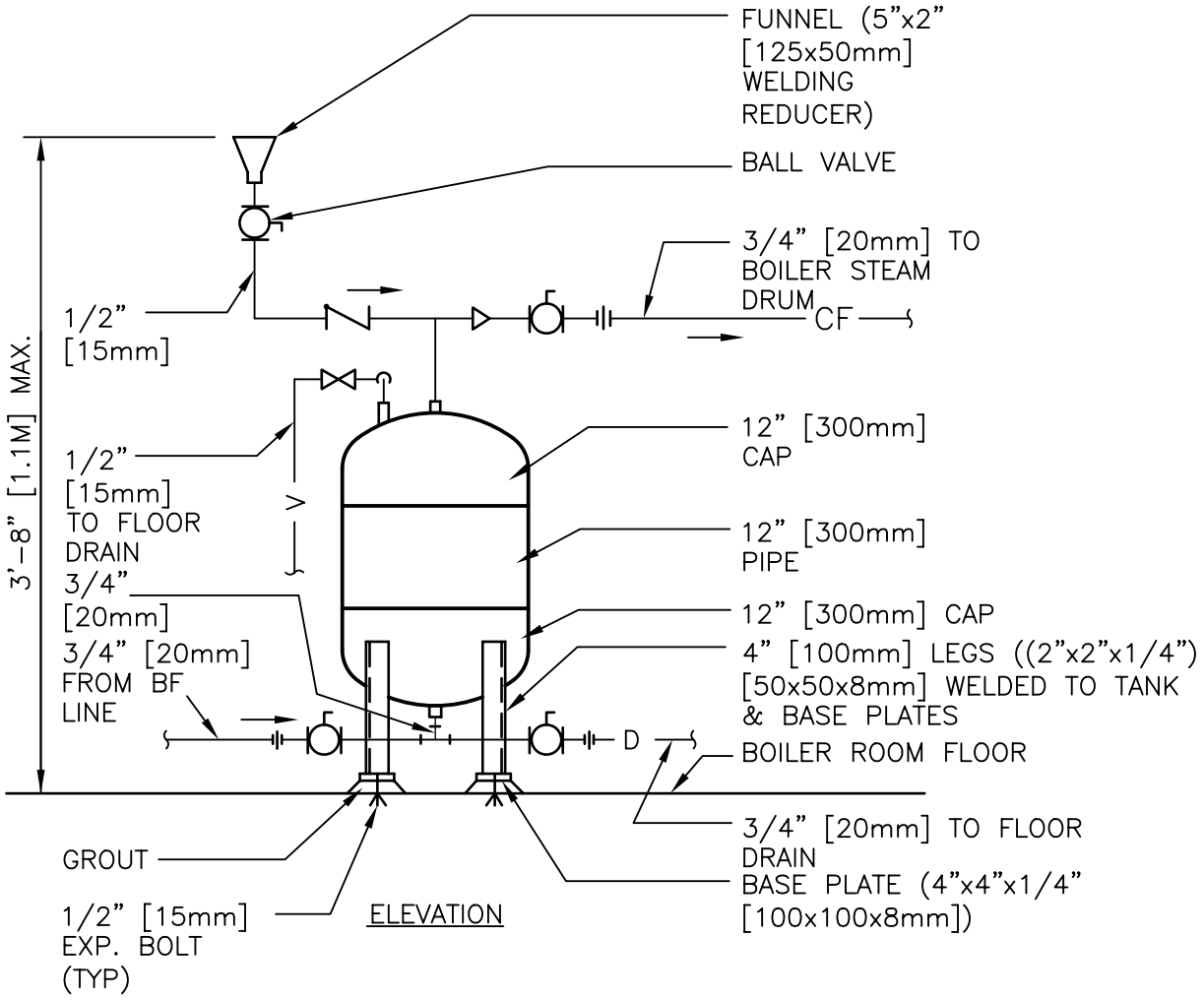

NOTE: NORMAL CHEMICAL FEED SHALL BE WITH A PUMP TYPE SYSTEM. SHOT TYPE SHALL BE USED ONLY FOR BOILER LAYUP.

BOILER CHEMICAL FEED SYSTEM - SHOT TYPE

#

NTS

Department of Veterans Affairs

DETAIL TITLE / BOILER CHEMICAL FEED SYSTEM SHOT TYPE

SCALE :NONE

DATE ISSUED :DECEMBER 2008

CADD DETAIL NO. : SD235011-08.DWG

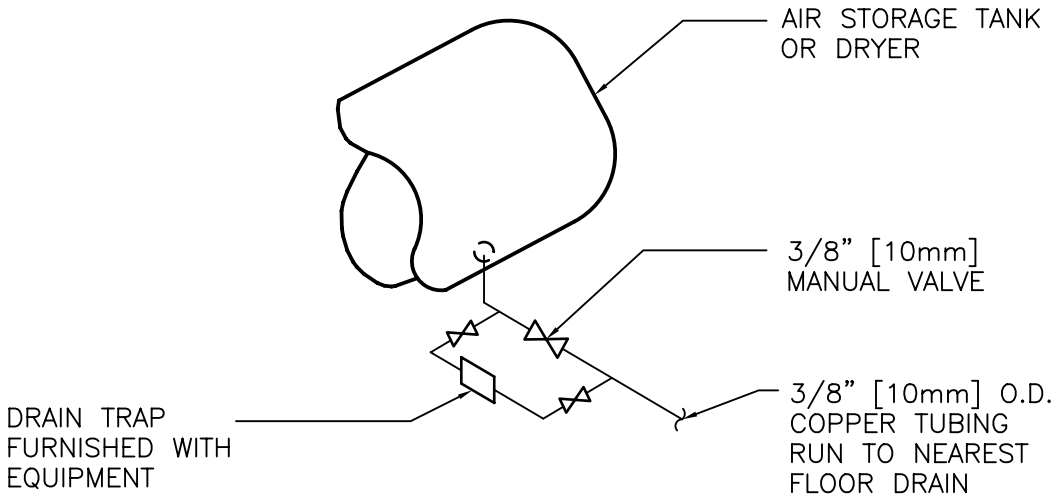

TYPICAL DRAIN FOR AIR COMPRESSOR AND DRYER

#

NTS

Department of Veterans Affairs

DETAIL TITLE / TYPICAL DRAIN FOR AIR COMPRESSOR AND DRYER

SCALE :NONE

DATE ISSUED :DECEMBER 2008

CADD DETAIL NO. : SD235011-09.DWG

NOTES:
1. REFER TO SYMBOL AND SCHEDULE SHEETS FOR SEISMIC FORCE DESIGN INFORMATION
2. PROVIDE SLOTTED HOLES IN PLATES TO ALLOW THERMAL EXPANSION IF RECOMMENDED BY BOILER MANUFACTURER

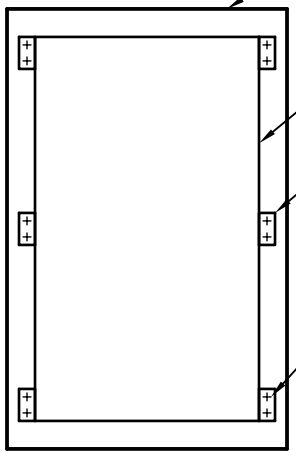

CONCRETE FOUNDATION

BOILER BASE FRAME

PLATE WELDED TO BASE (PLATE DESIGNED BY BOILER FRAME MANUFACTURER)

ANCHOR BOLTS SIZE AND QUANTITY DETERMINED BY CONTRACTOR BASED ON BOILER FURNISHED

PLAN

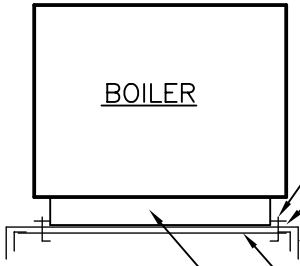

ANCHOR BOLT

PLATE

CONC. FOUNDATION

REBAR

BOILER BASE FRAME

ELEVATION

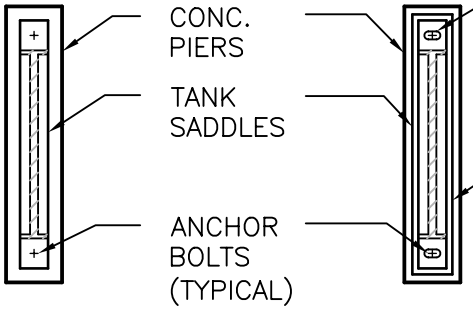

CONC. PIERS

TANK SADDLES

ANCHOR BOLTS (TYPICAL)

SLOTTED HOLE LENGTH = BOLT SIZE +0.5" [15mm] EACH SIDE

3/8" [10mm] THK. STEEL PLATE BOLTED TO PIER

PLAN

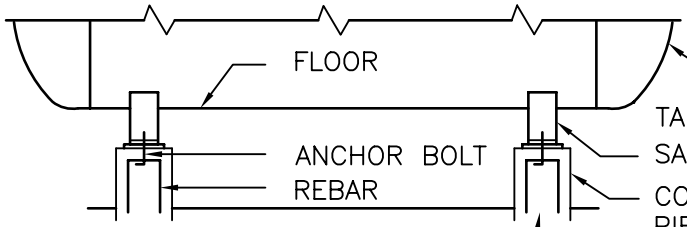

FLOOR

TANK

ANCHOR BOLT

SADDLE

REBAR

CONCRETE PIER

ELEVATION

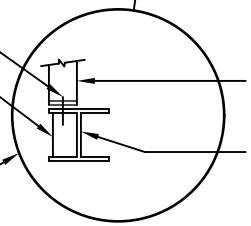

BOLTS

REINFORCEMENT PLATES

ALTERNATE FOR TANKS SUPPORTED BY STEEL BEAMS

SADDLE

BEAM

EQUIPMENT ANCHORING - PACKAGED BOILER AND DEAERATOR AND CONDENSATE STORAGE TANKS

#

NTS

Department of Veterans Affairs

DETAIL TITLE / EQUIPMENT ANCHORING-PACKAGED BOILER AND DAEERATOR AND CONDENSATE STORAGE TANKS

SCALE :NONE

DATE ISSUED :DECEMBER 2008

CADD DETAIL NO. : SD235011-10.DWG

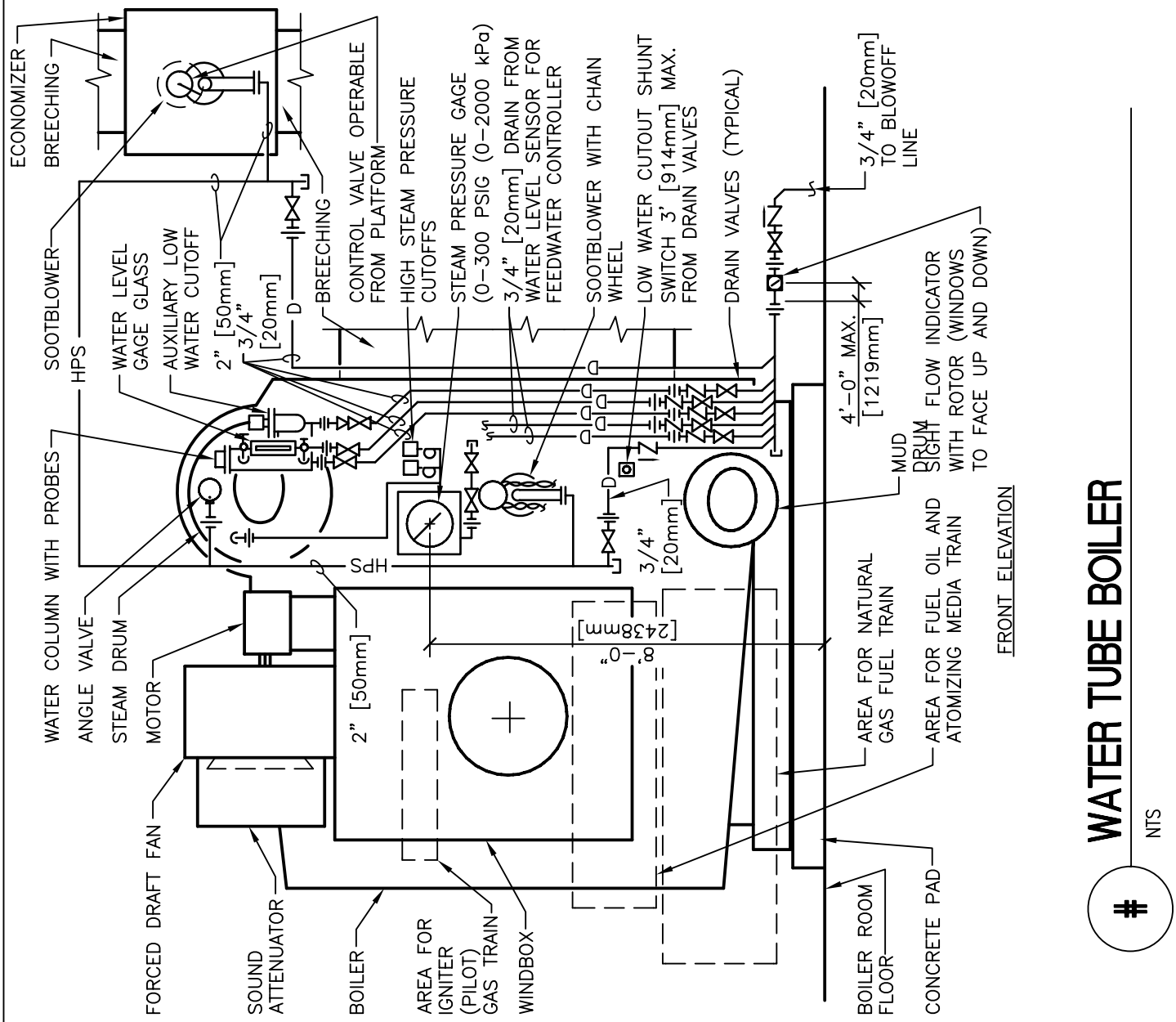

Department of Veterans Affairs

DETAIL TITLE / WATER TUBE BOILER

SCALE :NONE

DATE ISSUED: DECEMBER 2008 CAD DETAIL NO.: SD235233-01.DWG

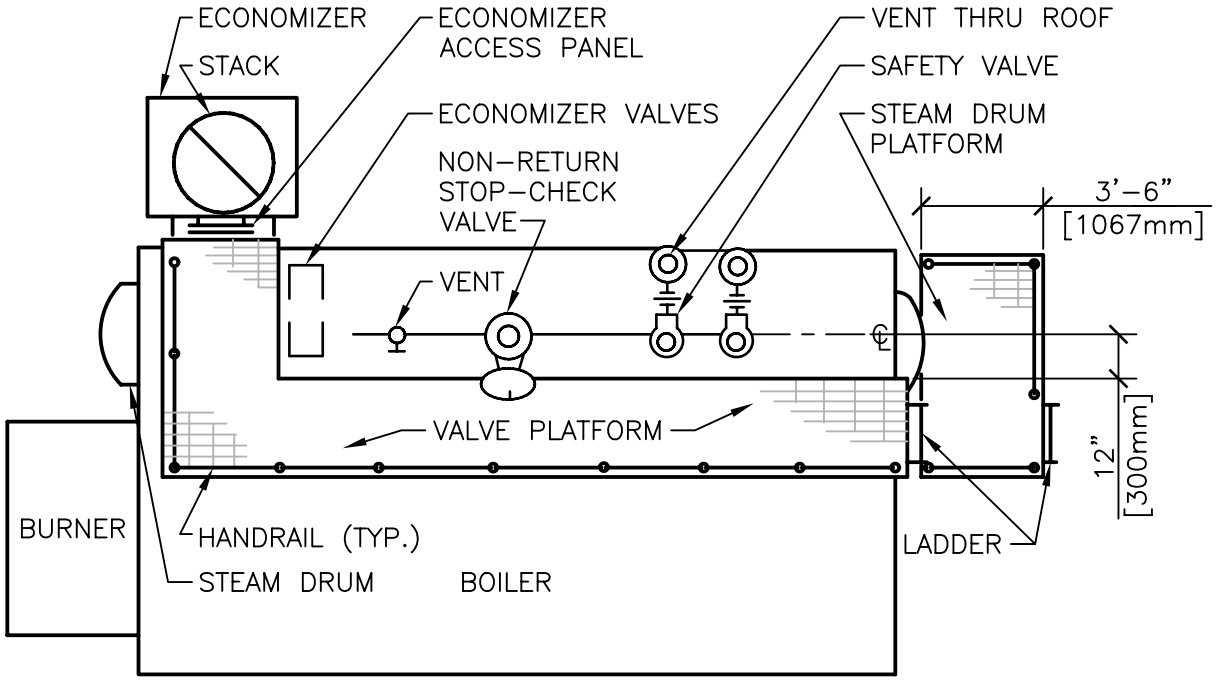

PLAN VIEW

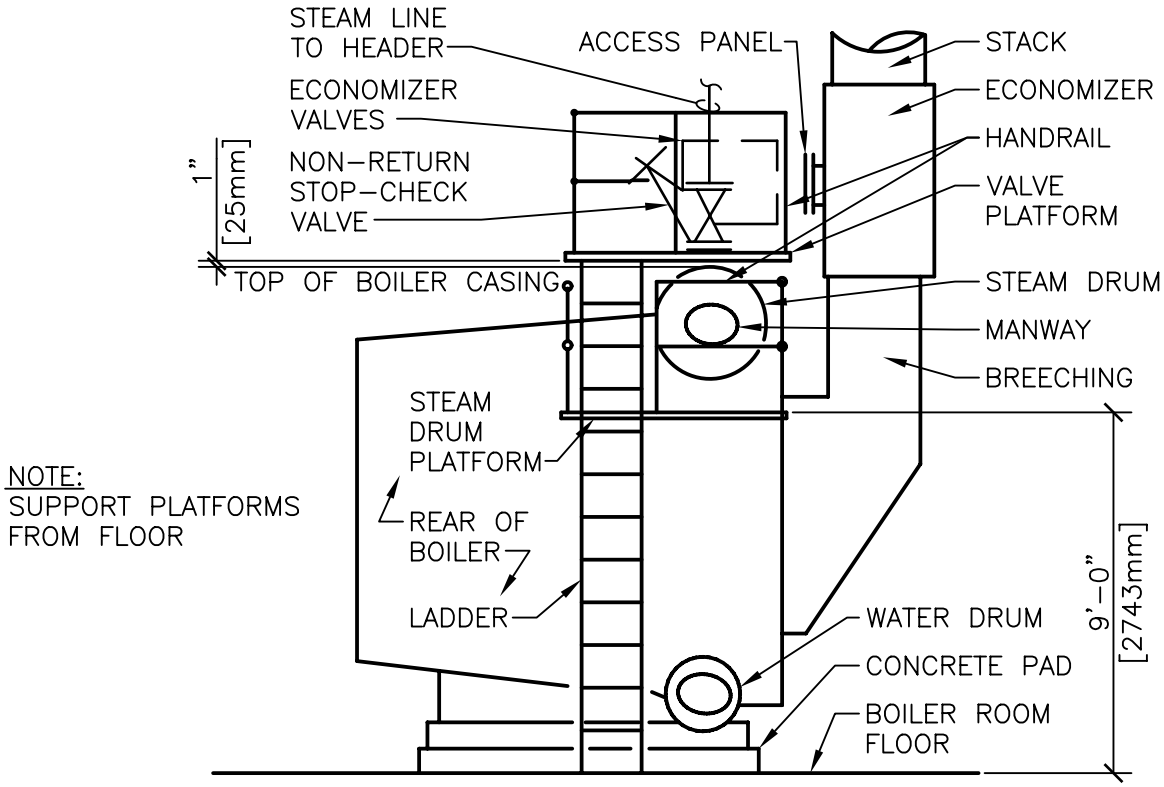

NOTE:
SUPPORT PLATFORMS FROM FLOOR

ELEVATION

ACCESS PLATFORM ARRANGEMENT WATER TUBE BOILER

#

NTS

Department of Veterans Affairs

DETAIL TITLE / ACCESS PLATFORM ARRANGEMENT WATER TUBE BOILER

SCALE :NONE

DATE ISSUED: DECEMBER 2008 CAD DETAIL NO.: SD235233-02.DWG

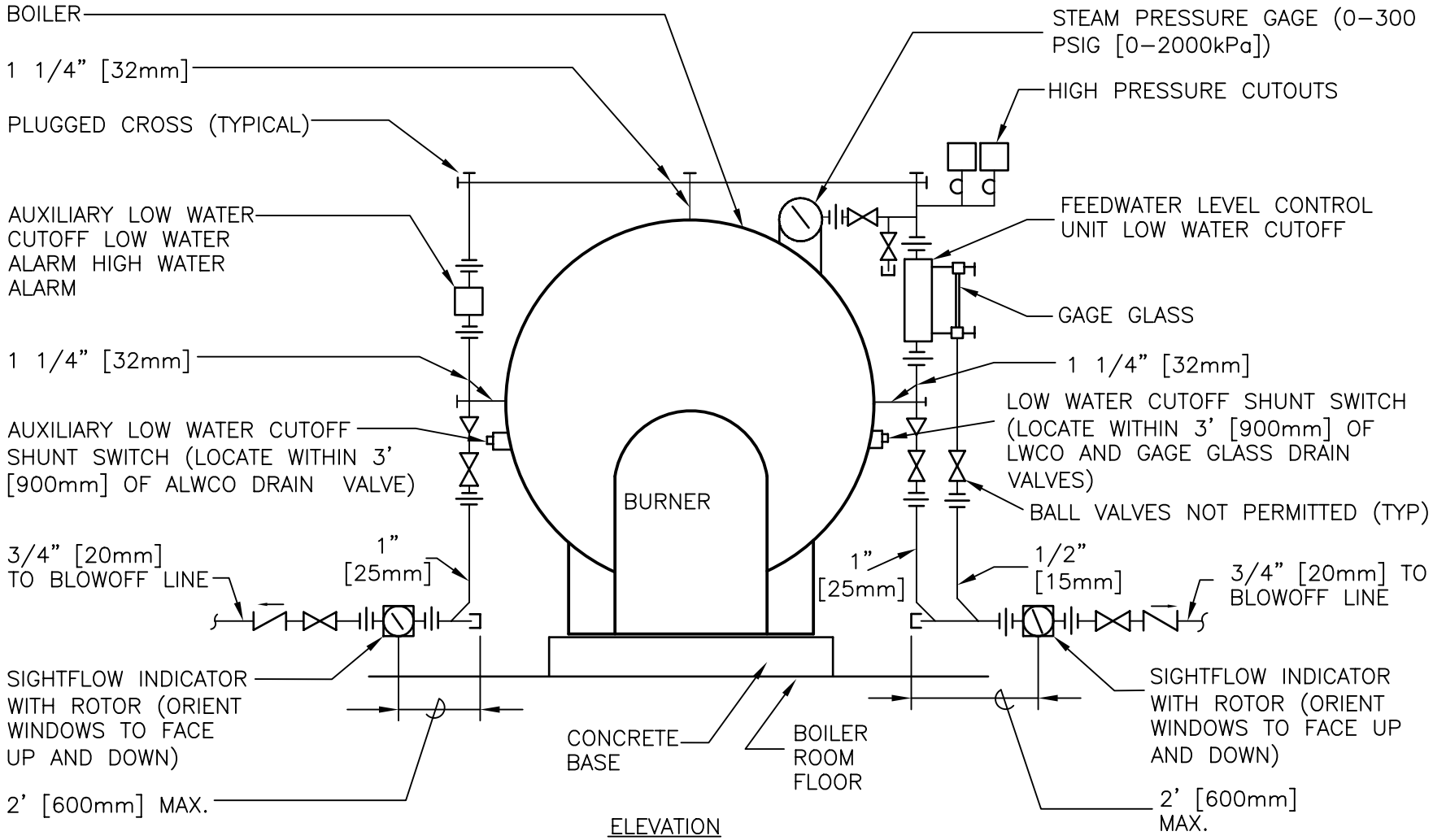

FIRE TUBE BOILER

#

NTS

Department of Veterans Affairs

DETAIL TITLE / FIRE TUBE BOILER

SCALE :NONE

DATE ISSUED :DECEMBER 2008

CADD DETAIL NO. : SD235239-01.DWG

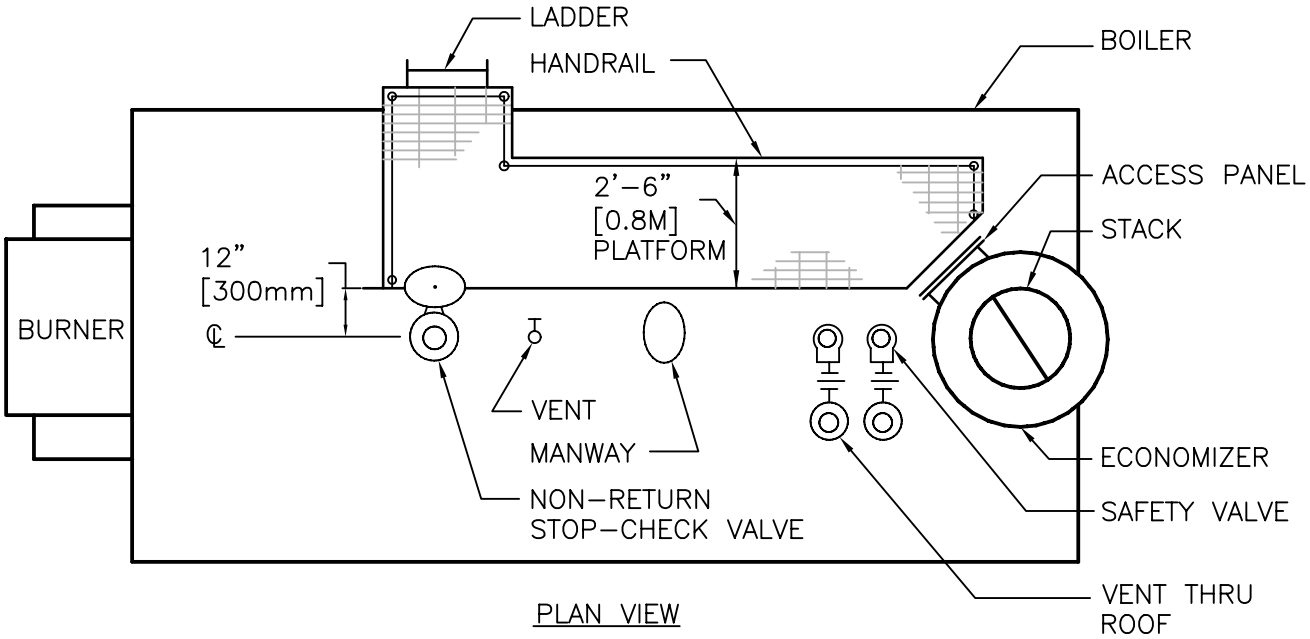

PLAN VIEW

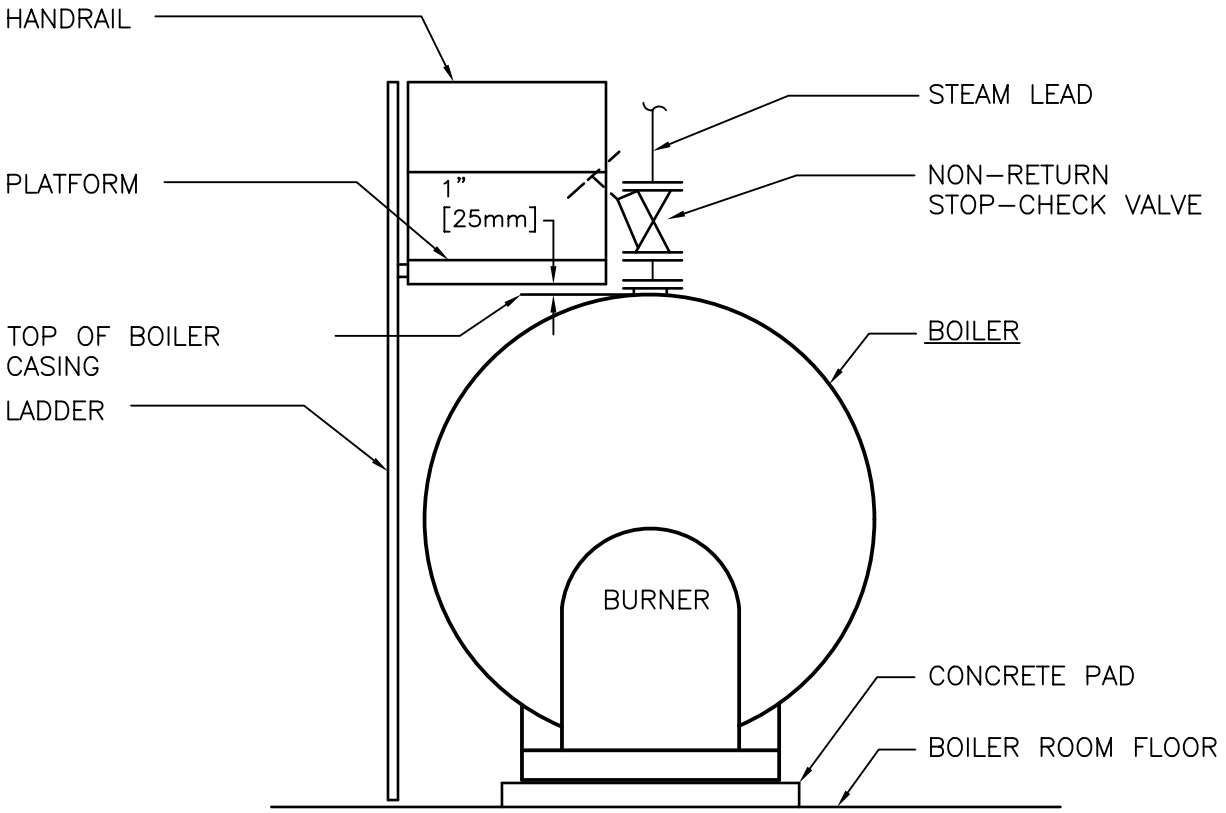

ELEVATION

NOTE: SUPPORT PLATFORM FROM FLOOR OR FROM BOILER IF BOILER MANUFACTURER PROVIDES BOILER ATTACHMENTS AND APPROVES INSTALLATION.

ACCESS PLATFORM ARRANGEMENT

#

NTS

Department of Veterans Affairs

DETAIL TITLE / ACCESS PLATFORM ARRANGEMENT

SCALE :NONE

DATE ISSUED :DECEMBER 2008

CADD DETAIL NO. : SD235239-02.DWG

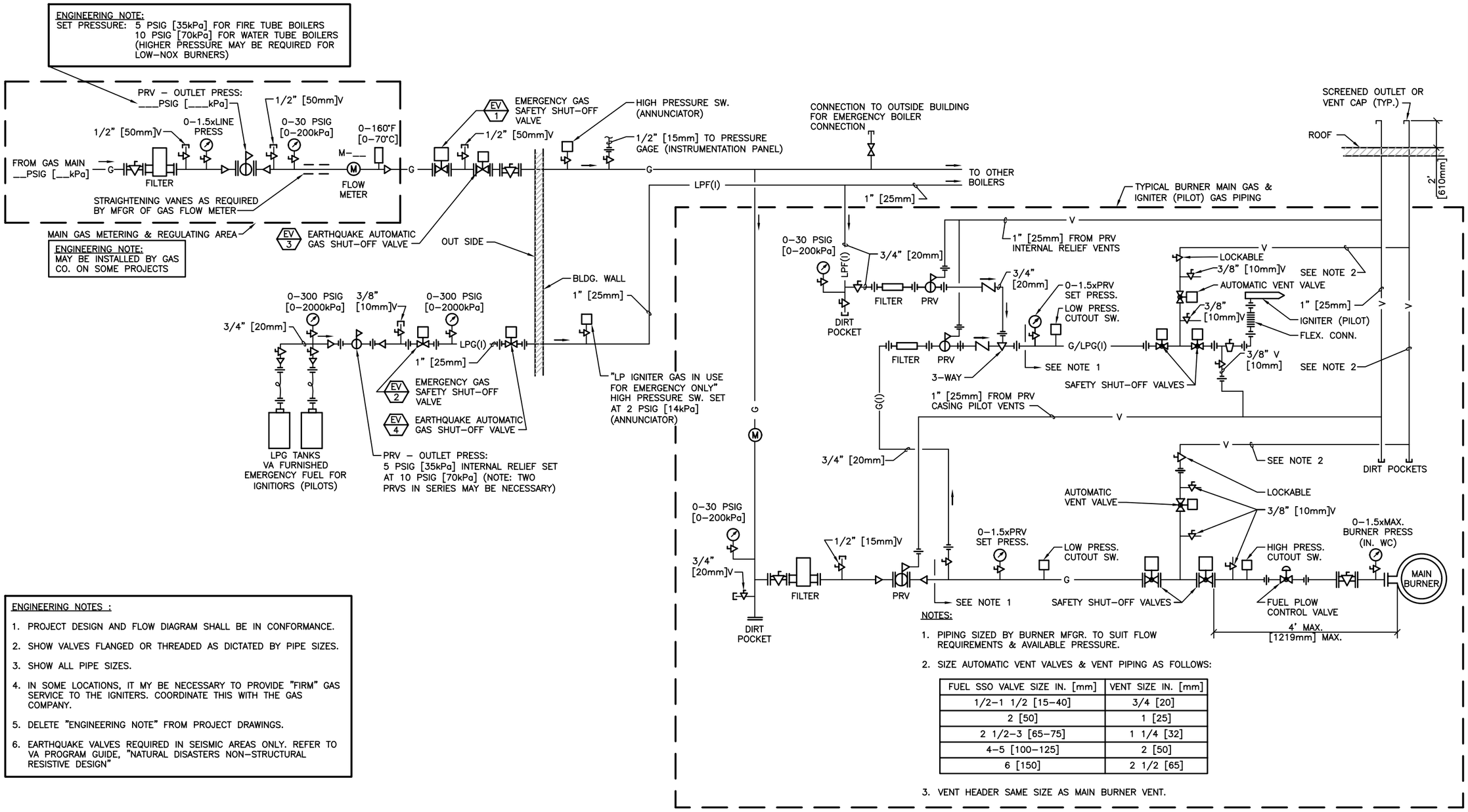

NOTES:

1. PIPING SIZED BY BURNER MFGR. TO SUIT FLOW REQUIREMENTS & AVAILABLE PRESSURE.
2. SIZE AUTOMATIC VENT VALVES & VENT PIPING AS FOLLOWS:

FUEL SSO VALVE SIZE IN. [mm]	VENT SIZE IN. [mm]
1/2–1 1/2 [15–40]	3/4 [20]
2 [50]	1 [25]
2 1/2–3 [65–75]	1 1/4 [32]
4–5 [100–125]	2 [50]
6 [150]	2 1/2 [65]

3. VENT HEADER SAME SIZE AS MAIN BURNER VENT.

ENGINEERING NOTES :

1. PROJECT DESIGN AND FLOW DIAGRAM SHALL BE IN CONFORMANCE.
2. SHOW VALVES FLANGED OR THREADED AS DICTATED BY PIPE SIZES.
3. SHOW ALL PIPE SIZES.
4. IN SOME LOCATIONS, IT MY BE NECESSARY TO PROVIDE "FIRM" GAS SERVICE TO THE IGNITERS. COORDINATE THIS WITH THE GAS COMPANY.
5. DELETE "ENGINEERING NOTE" FROM PROJECT DRAWINGS.
6. EARTHQUAKE VALVES REQUIRED IN SEISMIC AREAS ONLY. REFER TO VA PROGRAM GUIDE, "NATURAL DISASTERS NON-STRUCTURAL RESISTIVE DESIGN"

NATURAL GAS AND LIQUEFIED PETROLEUM GAS - BURNER AND IGNITER FUEL STANDARD PIPING DIAGRAM

NTS

DETAIL TITLE / NATURAL GAS AND LIQUEFIED PETROLEUM GAS - BURNER AND IGNITER FUEL STANDARD PIPING DIAGRAM

SCALE :NONE

DATE ISSUED: DECEMBER 2008

CAD DETAIL NO.: SD235239-03.DWG

Department of Veterans Affairs

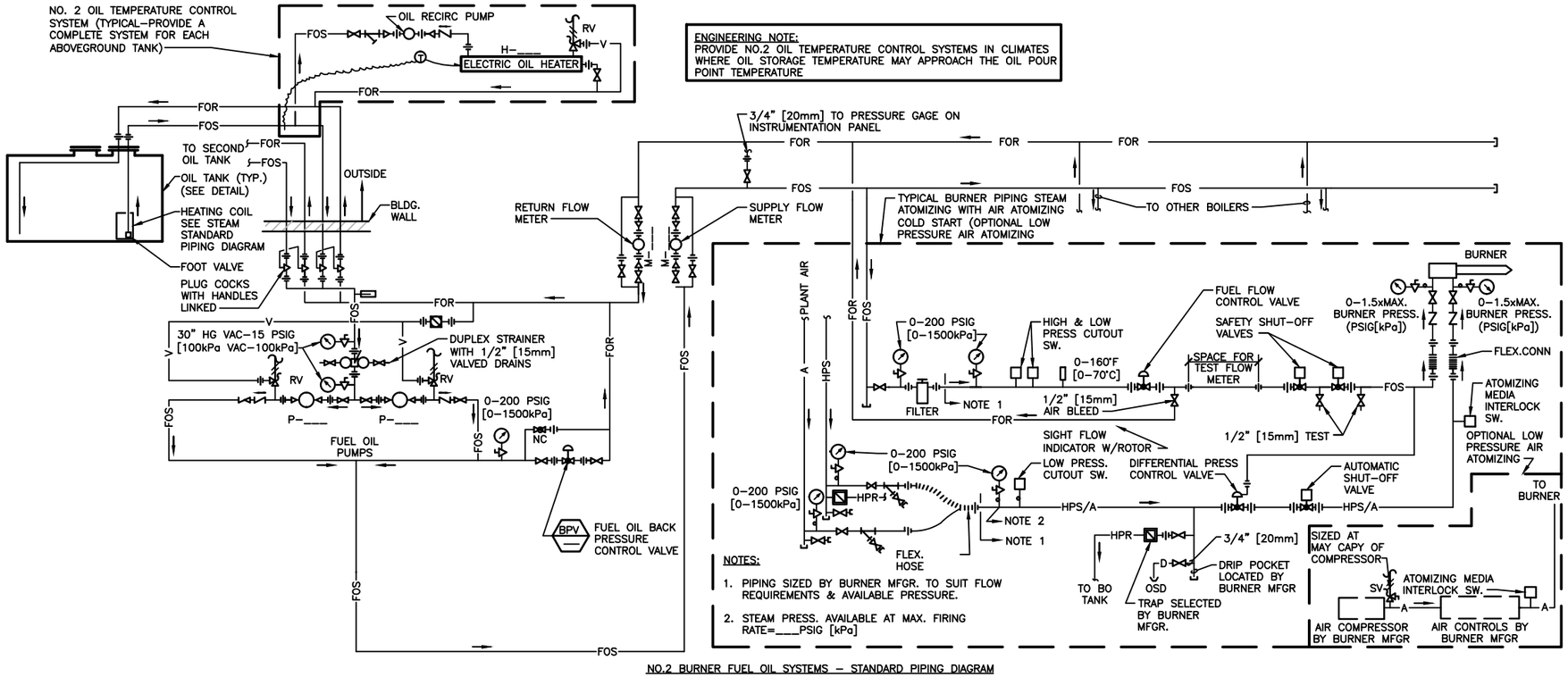

NO.2 BURNER FUEL OIL SYSTEMS – STANDARD PIPING DIAGRAM

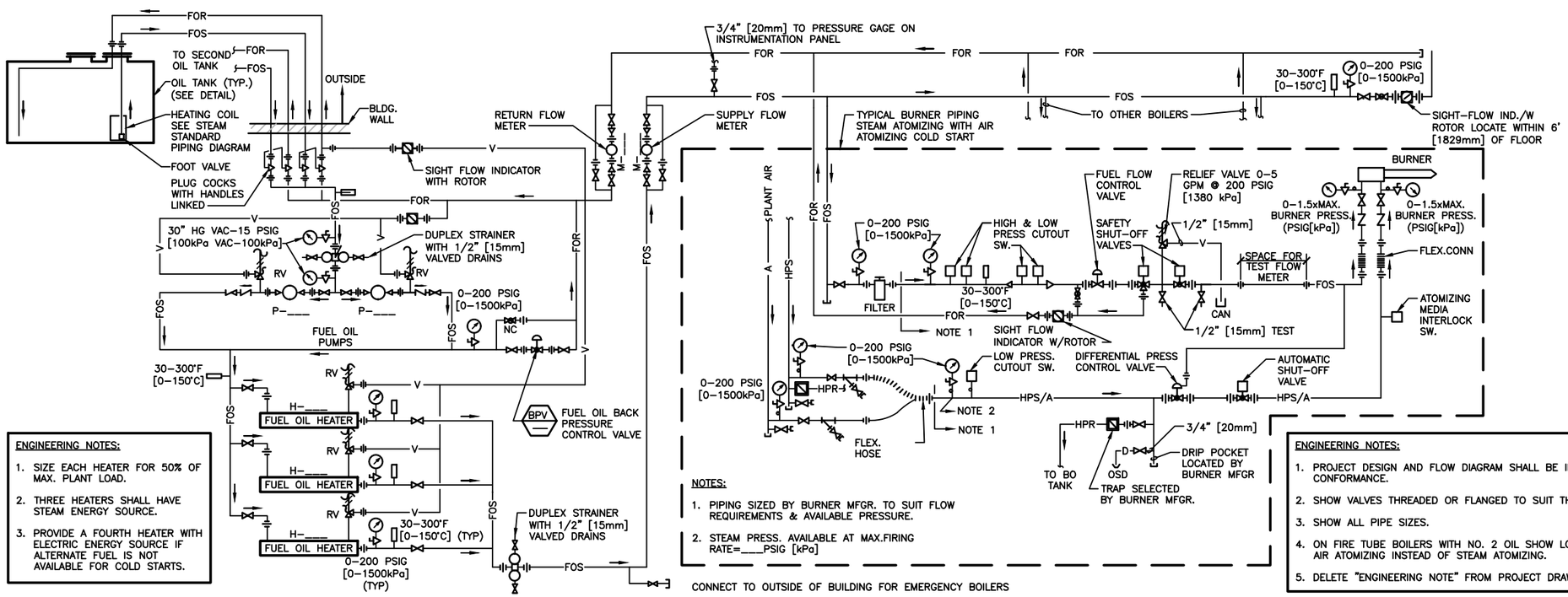

NO.5 AND NO.6 BURNER FUEL OIL SYSTEMS – STANDARD PIPING DIAGRAM

NO.2 BURNER FUEL OIL SYSTEMS - STANDARD PIPING DIAGRAM, NO.5 AND NO.6 BURNER FUEL OIL SYSTEMS - STANDARD PIPING DIAGRAM

NTS

DETAIL TITLE / NO.2 BURNER FUEL OIL SYSTEMS – STANDARD PIPING DIAGRAM
NO.5 AND NO.6 BURNER FUEL OIL SYSTEMS – STANDARD PIPING DIAGRAM

SCALE : NONE

DATE ISSUED: FEBRUARY 2010

CAD DETAIL NO.: SD235239-04.DWG

Department of Veterans Affairs

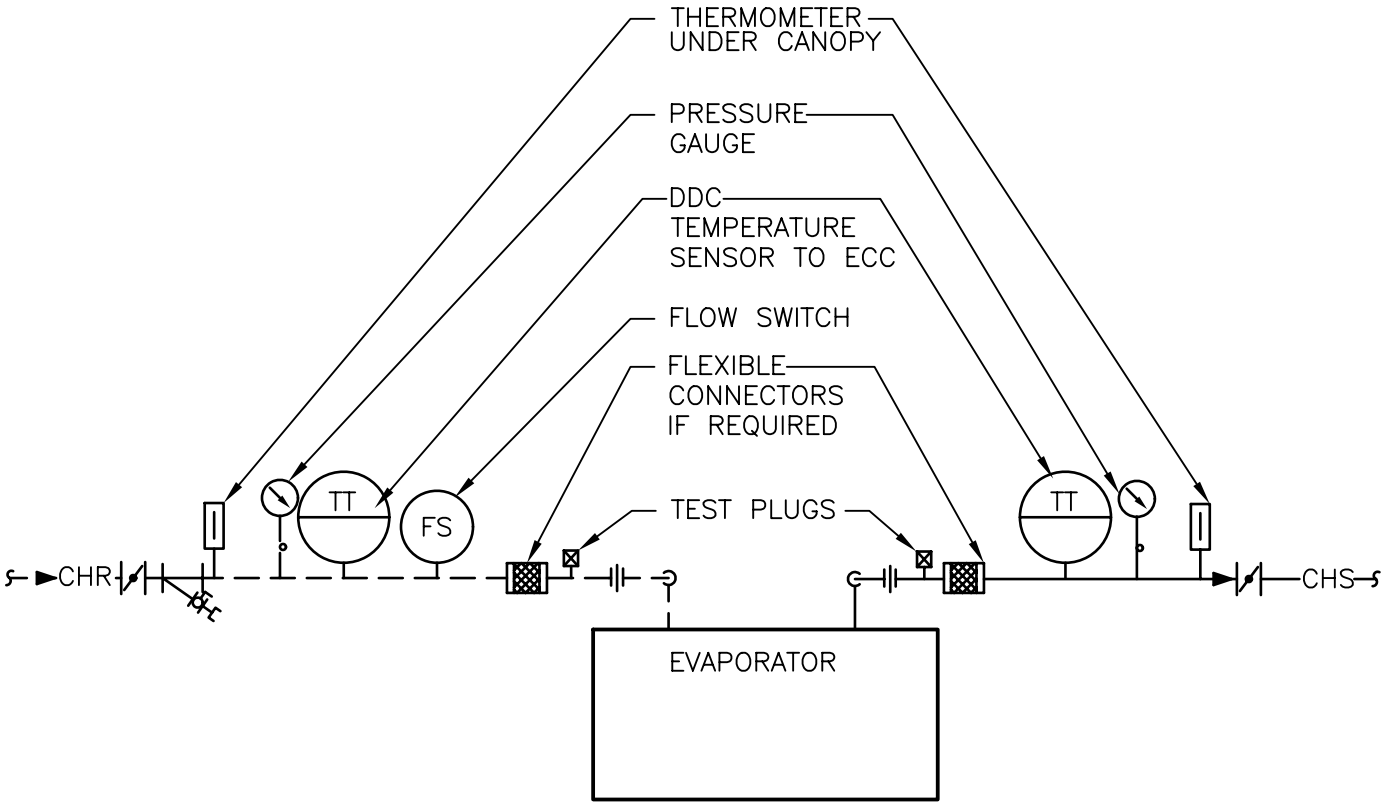

AIR COOLED CHILLER - PIPING CONNECTIONS

#

NTS

DESIGNER NOTE:

1. PROVIDE HEAT TRACING WHEN THE EXPOSED PIPING CARRYING CHILLED WATER IS NOT MIXED WITH PROPYLENE CLYCOL. ALL VALVES, STRAINER, FLOW SWITCH, FLEXIBLE CONNECTORS, ETC., SHALL BE WRAPPED WITH ELECTRIC HEAT TRACE CABLE UNDER INSULATION.

2. VERIFY NEED FOR FLEXIBLE CONNECTOR.

3. PROVIDE ALUMINUM JACKETING ON ALL EXPOSED, INSULATED PIPING.

Department of Veterans Affairs

DETAIL TITLE / AIR COOLED CHILLER - PIPING CONNECTIONS

SCALE :NONE

DATE ISSUED: DECEMBER 2008 CAD DETAIL NO.: SD236400-01.DWG

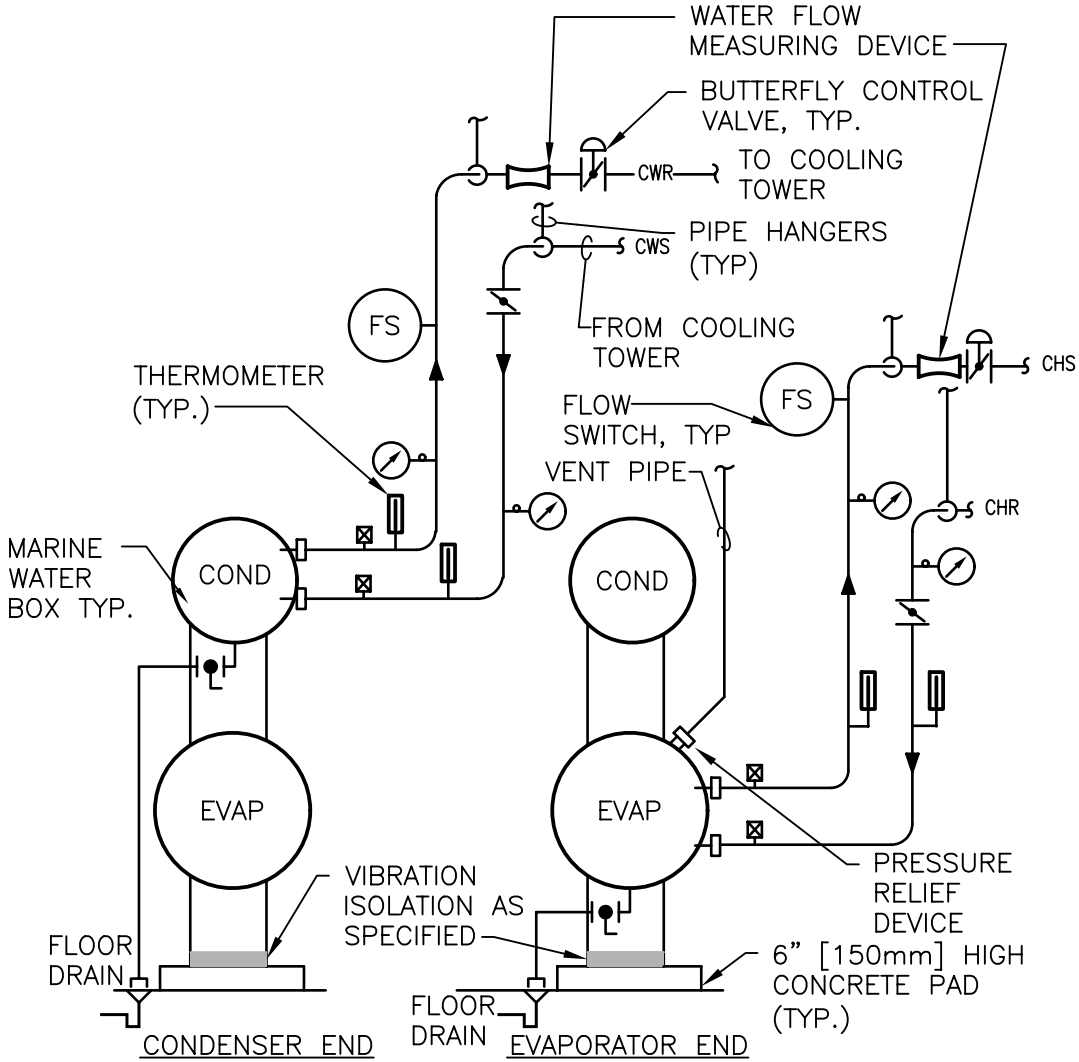

NOTE:

1. DRAIN ALL LOW POINTS OF SYSTEMS TO NEAREST FLOOR DRAIN.
2. PROVIDE MARINE WATER BOXES FOR BOTH CONDENSER AND EVAPORATOR.
3. COLLECT VENT PIPES FROM ALL REFRIGERANT PRESSURE RELIEF DEVICES AND EXTEND TO EXTERIOR OF BUILDING IN ACCORDANCE WITH ASHRAE STANDARD 15. HEADER SIZE TO EQUAL OR EXCEED TOTAL AREA OF DEVICES CONNECTED TO THE HEADER.
4. PROVIDE MODULATING BUTTERFLY VALVES ON BOTH CHWR & CWR. VALVES CONTROLLED BY ECC.
5. FOR PIPING 6" AND BELOW, MECHANICAL COUPLINGS ARE OPTIONAL. ABOVE 6", WELDED PIPE WITH FLANGES IS THE ONLY APPROVED JOINING METHOD.

WATER COOLED CHILLER - PIPING CONNECTIONS

#

NTS

Department of Veterans Affairs

DETAIL TITLE / WATER COOLED CHILLER - PIPING CONNECTIONS

SCALE :NONE

DATE ISSUED: DECEMBER 2008

CAD DETAIL NO.: SD236400-02.DWG

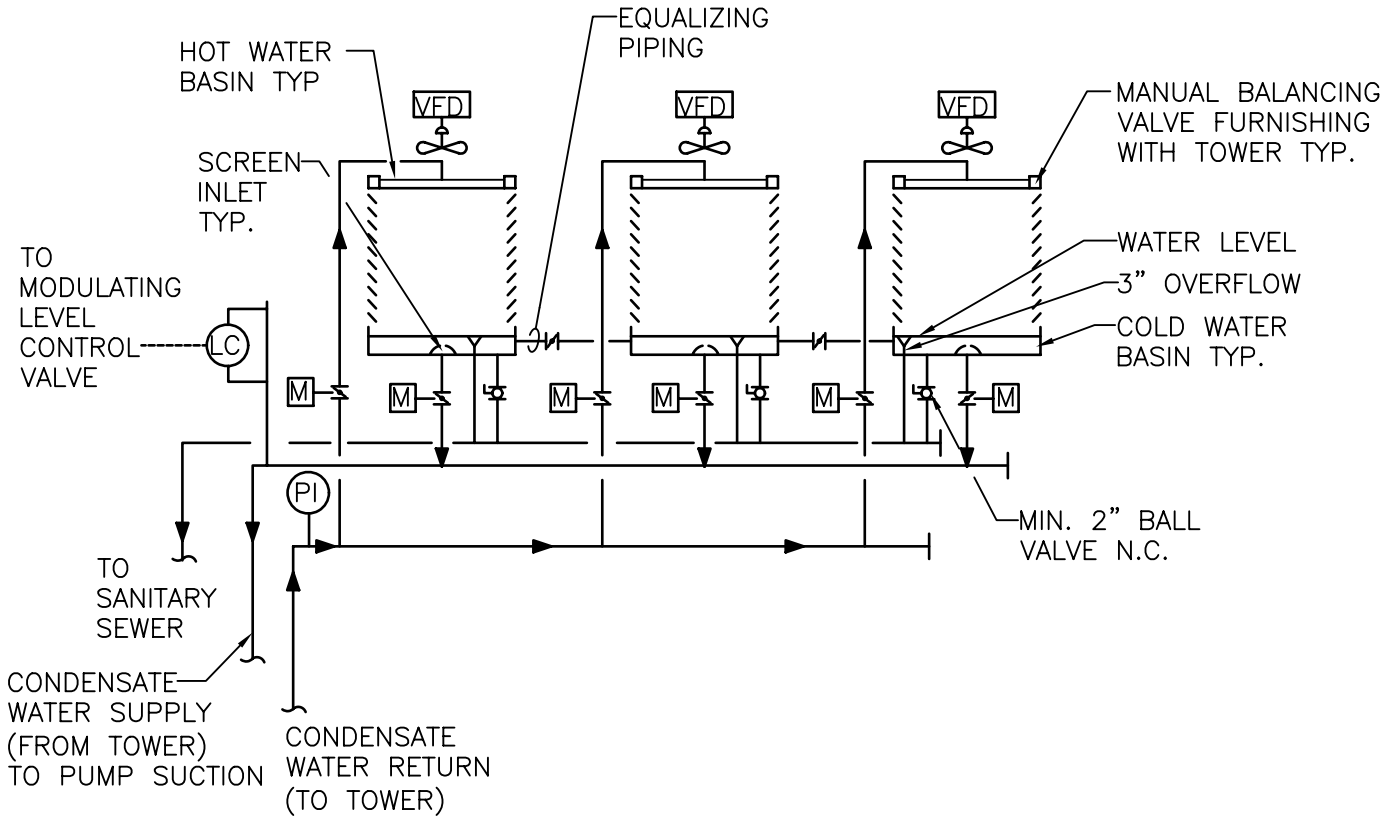

NOTE:

1. THE BASINS SHALL BE INTERCONNECTED BY FLUMES. EACH CELL SHALL BE PROVIDED WITH ITS OWN SUMP AND ANTI–CAVITATION PLATE.

MULTIPLE CELL COOLING TOWER - PIPING CONNECTIONS

#

NTS

DESIGNERS NOTES:

1. IF TOWER IS INSTALLED MORE THAN 5 FT [1500 MM] ABOVE THE ROOF OR GRADE PROVIDE A PLATFORM AROUND THE PERIMETER.
2. PROVIDE ACCESS FOR ALL ELEVATED VALVES AND CONTROL DEVICES AND TO EACH FAN MOTOR.
3. SEE HVAC DESIGN MANUAL.
4. COORDINATE WITH ELECTRICAL ON BASIN HEATER.

Department of Veterans Affairs

DETAIL TITLE / MULTIPLE CELL COOLING TOWER - PIPING CONNECTIONS

SCALE :NONE

DATE ISSUED: DECEMBER 2008

CAD DETAIL NO.: SD236500-01.DWG

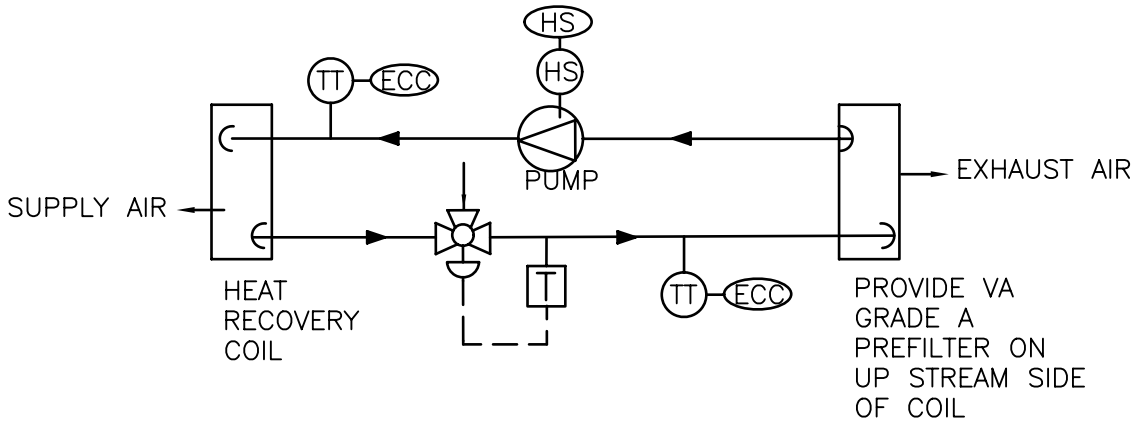

NOTES:

1. TO PREVENT ICING ON EXHAUST COIL MAINTAIN TEMPERATURE OF SOLUTION ENTERING EXHAUST AIR COIL $\geq$ 35° F BY MODULATING 3 WAY VALVE.

2. DISCONTINUE HEAT RECOVERY IF OUTSIDE AIR TEMPERATURE $\geq$ BETWEEN 60 TO 80° F (ADJUSTABLE)

3. FOR SYSTEMS WITH WINTER DESIGN CONDITIONS $\leq$ 32° F, PROVIDE APPROPRIATE PROPYLENE GLYCOL SOLUTION.

RUN AROUND HEAT RECOVERY COIL DETAIL

#

NTS

Department of Veterans Affairs

DETAIL TITLE / RUN AROUND ENERGY RECOVERY DETAIL

SCALE :NONE

DATE ISSUED: DECEMBER 2008 CAD DETAIL NO.: SD237200-01.DWG

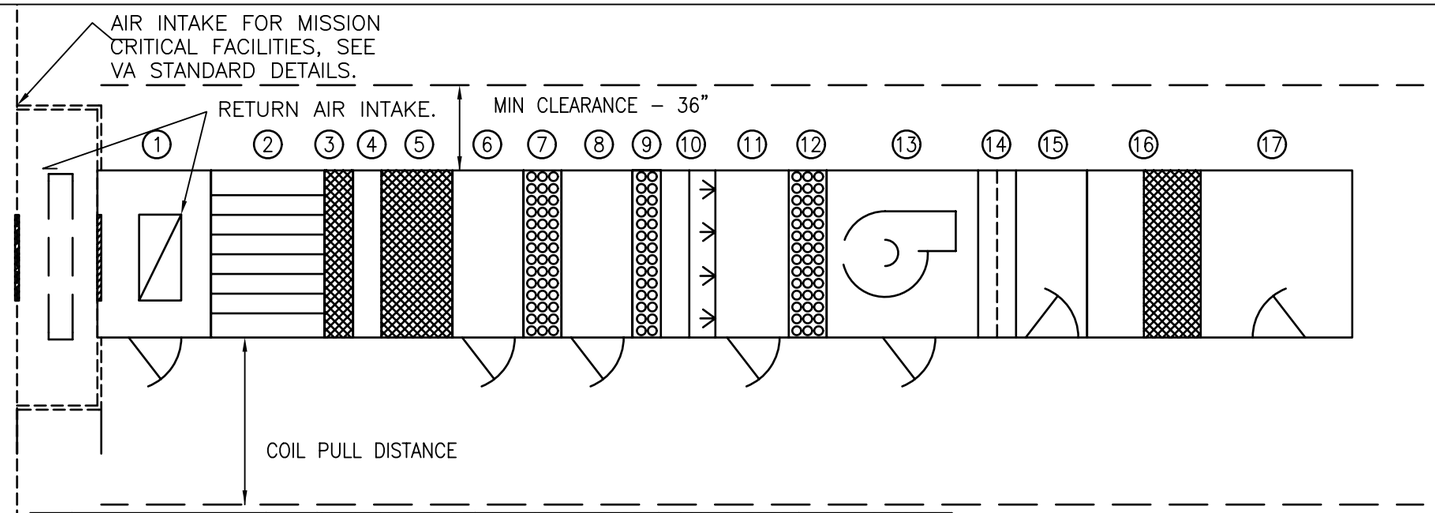

	AIR HANDLING UNIT	ITEM	MINIMUM OUTSIDE AIR TWO BEDS OF FILTERS VAV	MINIMUM OUTSIDE AIR THREE BEDS OF FILTERS CV	100% OUTSIDE AIR TWO BEDS OF FILTERS CV	100% OUTSIDE AIR THREE BEDS OF FILTERS CV
*	MIXING BOX	1	YES	YES	NO	NO
*	BLENDER SECTION	2	YES	YES	NO	NO
	PRE–FILTERS (SIDE ACCESS)	3	YES	YES	YES	YES
	INSPECTION SECTION, SMALL	4	YES	YES	YES	YES
	AFTER FILTER (SIDE ACCESS)	5	YES	YES	YES	YES
	ACCESS SECTION, MED–LARGE	6	YES	YES	YES	YES
*	HEAT RECOVERY COIL	7	NO	NO	YES	YES
*	ACCESS SECTION, MED–LARGE	8	NO	NO	YES	YES
*	PRE–HEAT COIL	9	YES	YES	YES	YES
*	INSPECTION SECTION,SMALL	10	YES	YES	YES	YES
	HUMIDIFIER	11	YES	YES	YES	YES
	COOLING COIL	12	YES	YES	YES	YES
	FAN	13	YES	YES	YES	YES
*	DIFFUSER PLATE	14	NO	NO	NO	YES
*	ACCESS SECTION,MED–LARGE	15	NO	NO	YES	YES
*	HEPA FILTER	16	NO	NO	NO	YES
*	DISCHARGE PLENUM (VERTICAL)	17	YES	YES	YES	YES
* AS REQUIRED						

NOTE:

1. ACCESS DOORS SHALL BE GASKETED AND HINGED TO OPEN AGAINST FAN OPERATING PRESSURE TO PREVENT AIR LEAKAGE.
2. MINIMUM ACCESS DOOR WIDTH SHALL BE 24" [600mm].
3. ACCESS DOOR HEIGHT SHALL BE DETERMINED BY UNIT CASING BUT NOT TO EXCEED 6'–0" [1800mm].
4. ACCESS DOORS ON FAN SUCTION SHALL OPEN OUTWARD.
5. ACCESS DOORS ON FAN DISCHARGE SIZE SHALL OPEN INWARD.

ACCESS DOOR SWING DETAIL FOR AIR HANDLING UNITS

NTS

DESIGNER'S NOTES:

1. ALL AHU SECTIONS SHOWN IN THIS DETAIL MAY NOT BE APPLICABLE TO EACH AIR HANDLING UNIT INCLUDED IN THE PROJECT.
2. SEE DETAIL FOR AIR INTAKE FOR MISSION CRITICAL FACILITIES.
3. USING THIS FORMAT, DESIGNER SHALL DEVELOP A SIMILAR VIEW OF EACH AHU INCLUDED IN THE PROJECT. SELECTION OF THE AHU SECTIONS SHALL BE APPLICATION SPECIFIC. EACH VIEW SHALL INCLUDE OVERALL DIMENSIONS AND AVAILABLE ACCESS SPACE FOR EACH AIR HANDLING UNIT. NOTE THAT THESE VIEWS DO NOT NEGATE THE NEED TO PROVIDE CROSS–SECTIONS/ELEVATIONS OF THE MECHANICAL ROOMS, SHOWING EQUIPMENT SECTIONS AND DETAILS OF EACH AHU.

DETAIL TITLE / ACCESS DOOR SWING DETAIL FOR AIR HANDLING UNITS

SCALE :NONE

DATE ISSUED: DECEMBER 2008

CAD DETAIL NO.: SD237300–01.DWG

Department of Veterans Affairs

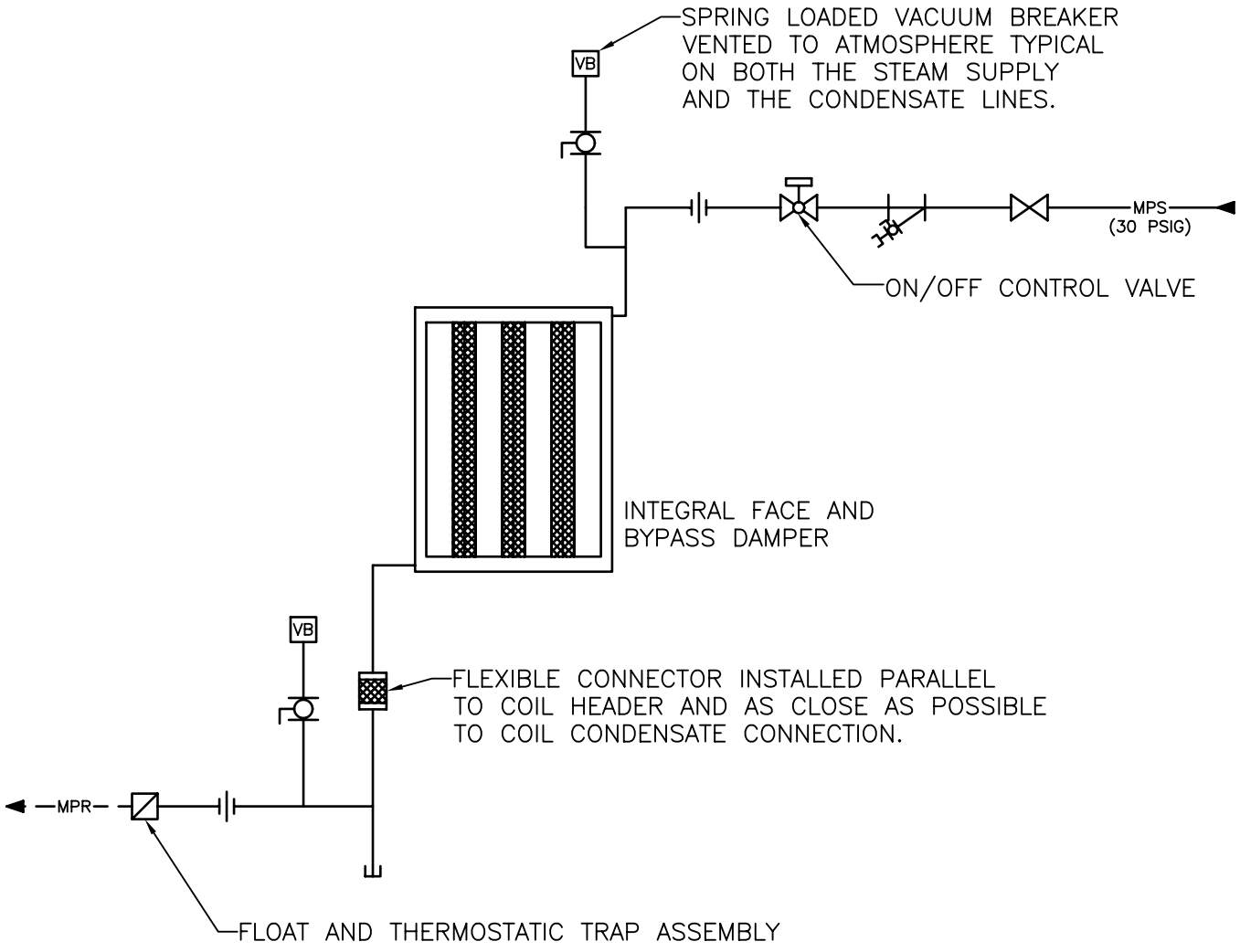

INTEGRAL FACE AND BYPASS STEAM COIL DETAIL

#

NTS

DESIGNER'S NOTE:

1. USE THIS DETAIL FOR UNIT MOUNTED PREHEAT COIL.

Department of Veterans Affairs

DETAIL TITLE / INTEGRAL FACE AND BYPASS STEAM COIL

SCALE :NONE

DATE ISSUED: DECEMBER 2008 CAD DETAIL NO.: SD237300-02.DWG

FAN COIL SEQUENCE OF OPERATION (COOLING ONLY)

1. FAN COIL UNIT SHALL OPERATE ON A SCHEDULE AS SET BY THE DCC.
2. MODULATE V-1 TO MAINTAIN SPACE SET POINT AND FAN SHALL CYCLE W/TEMPERATURE.
3. ALARM IF SPACE TEMPERATURE OUTSIDE OF RANGES.

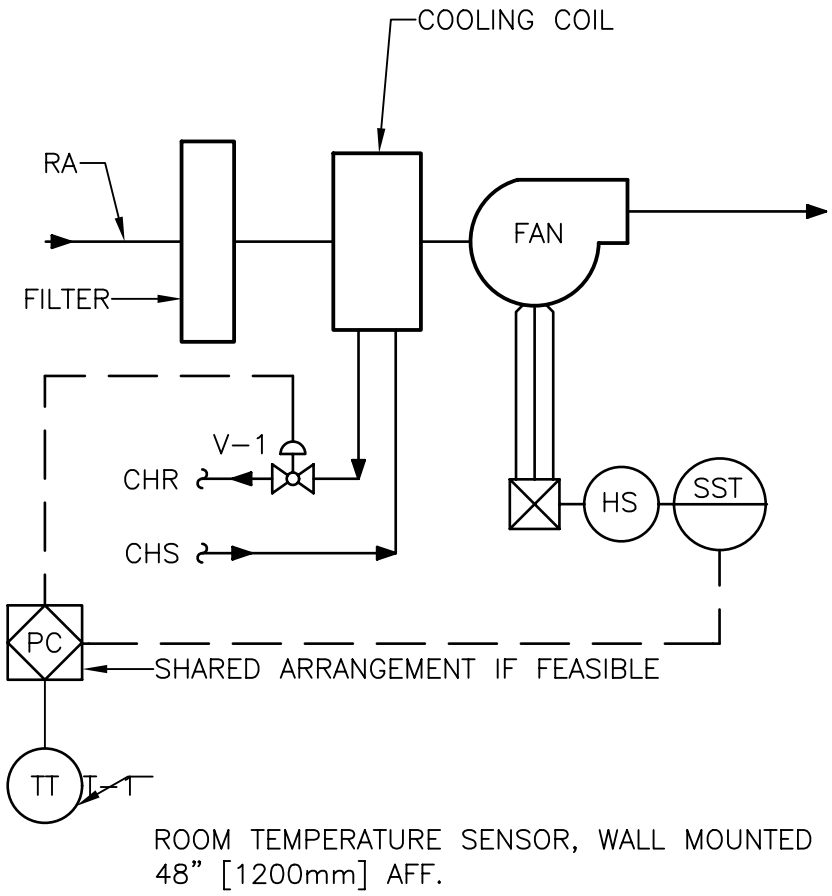

COOLING ONLY FAN COIL UNIT CONTROLS

#

NTS

DESIGNER'S NOTE

1. MODIFY THE DETAIL IF DCC IS NOT USED.

Department of Veterans Affairs

DETAIL TITLE / COOLING ONLY FAN COIL UNIT CONTROLS

SCALE :NONE

DATE ISSUED : DECEMBER 2008 CADD DETAIL NO. : SD238200-01.DWG

FAN COIL SEQUENCE OF OPERATION (HEATING ONLY)

1. FAN COIL UNIT SHALL OPERATE ON A SCHEDULE AS SET BY THE DCC.
2. MODULATE V-1 TO MAINTAIN SPACE SET POINT AND FAN SHALL CYCLE W/TEMPERATURE.
3. ALARM IF SPACE TEMPERATURE OUTSIDE OF RANGES.

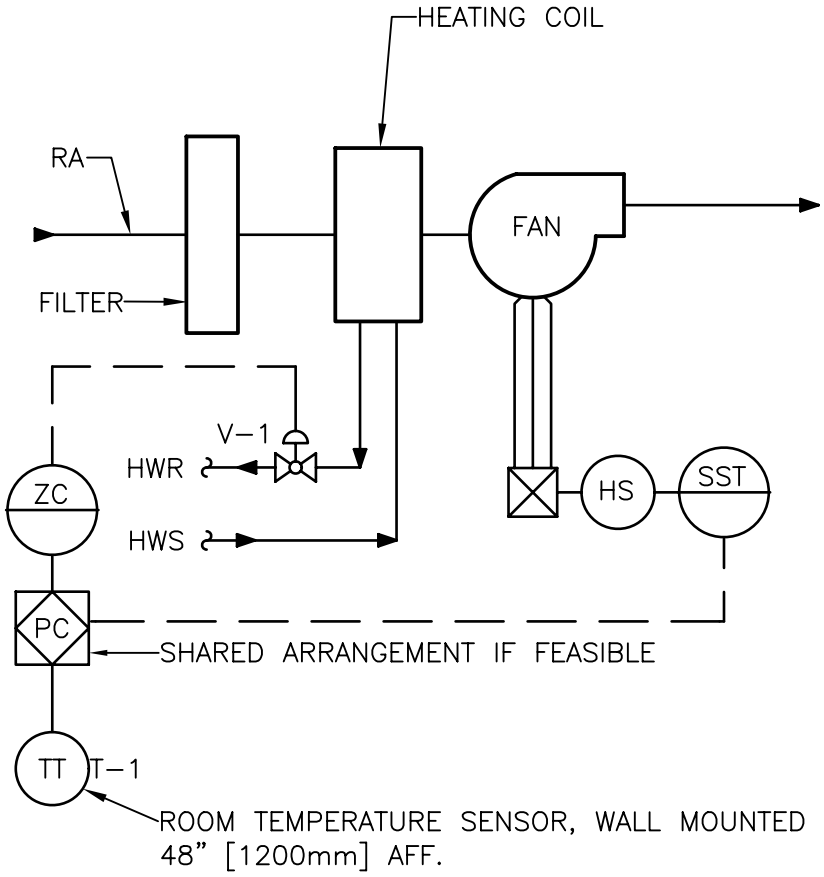

HEATING ONLY FAN COIL UNIT CONTROLS

#

NTS

DESIGNER'S NOTE
MODIFY DETAIL IF DCC IS NOT USED.

Department of Veterans Affairs

DETAIL TITLE / HEATING ONLY FAN COIL UNIT CONTROLS

SCALE :NONE

DATE ISSUED : DECEMBER 2008 CADD DETAIL NO. : SD238200-02.DWG

FAN COIL SEQUENCE OF OPERATION (PATIENT ROOMS)

FAN COIL UNIT SHALL OPERATE ON A SCHEDULE AS SET BY THE ECC. FAN SHALL RUN CONTINUOUSLY. FAN STATUS SHALL BE MONITORED AND AN ALARM MESSAGE SHALL BE GENERATED IN THE EVENT THE UNIT FAILS TO RUN. THE ADJUSTABLE ROOM TEMP SET POINT WILL BE 70°–75° WITH 0.5° HEATING/COOLING OFFSETS. VALVE V–1 & V–2 WILL NOT BE OPEN SIMULTANEOUSLY. ROOM OCCUPANT WILL HAVE ABILITY OF ADJUSTING ROOM TEMPERATURE BETWEEN 70°–75°.

FAN COIL SEQUENCE OF OPERATION (NONPATIENT ROOMS)

FAN COIL SHALL OPERATE ON A SCHEDULE AS SET BY ECC. FAN SHALL RUN CONTINUOUSLY IN OCCUPIED MODE. FAN STATUS SHALL BE MONITORED AND AN ALARM MESSAGE SHALL BE GENERATED IN THE EVENT THE UNIT FAILS TO RUN BETWEEN THE RANGE OF 70°–75° SPACE TEMPERATURE BOTH V–1 & V–2 SHALL BE CLOSED. UPON RISE IN TEMPERATURE ABOVE 75° V–2 SHALL MODULATE OPEN TO MAINTAIN 75° F. UPON FALL IN TEMPERATURE BELOW 70° F. HEATING VALVE V–1 SHALL MODULATE TO OPEN TO MAINTAIN 70° F.

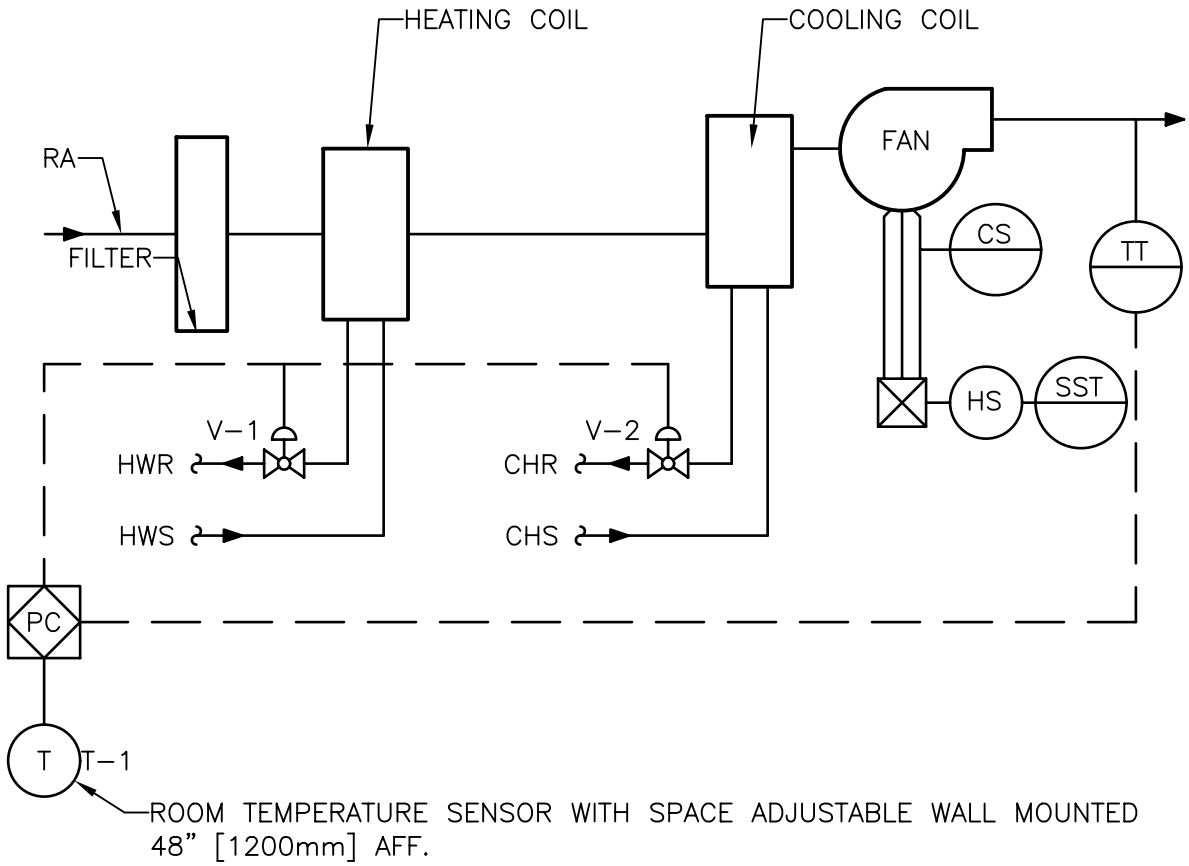

FOUR PIPE FAN COIL UNIT CONTROLS

#

NTS

Department of Veterans Affairs

DETAIL TITLE / FOUR PIPE FAN COIL UNIT CONTROLS

SCALE :NONE

DATE ISSUED : DECEMBER 2008 CADD DETAIL NO. : SD238200–03.DWG

HOT WATER CABINET UNIT HEATER SEQUENCE

1. CABINET HEATER SHALL OPERATE ON A SCHEDULE AS SET BY THE ECC. FAN STATUS SHALL BE MONITORED AND AN ALARM MESSAGE GENERATED IN THE EVENT THE UNIT FAILS TO RUN. THE ROOM TEMP SETPOINT WILL BE 74° (ADJ). THE HOT WATER VALVE WILL BE ENABLED AS REQUIRED TO MAINTAIN SPACE TEMP SETPOINT. HI/LO/OFF SWITCH WILL ALLOW LOCAL FAN SPEED ADJUSTMENT.

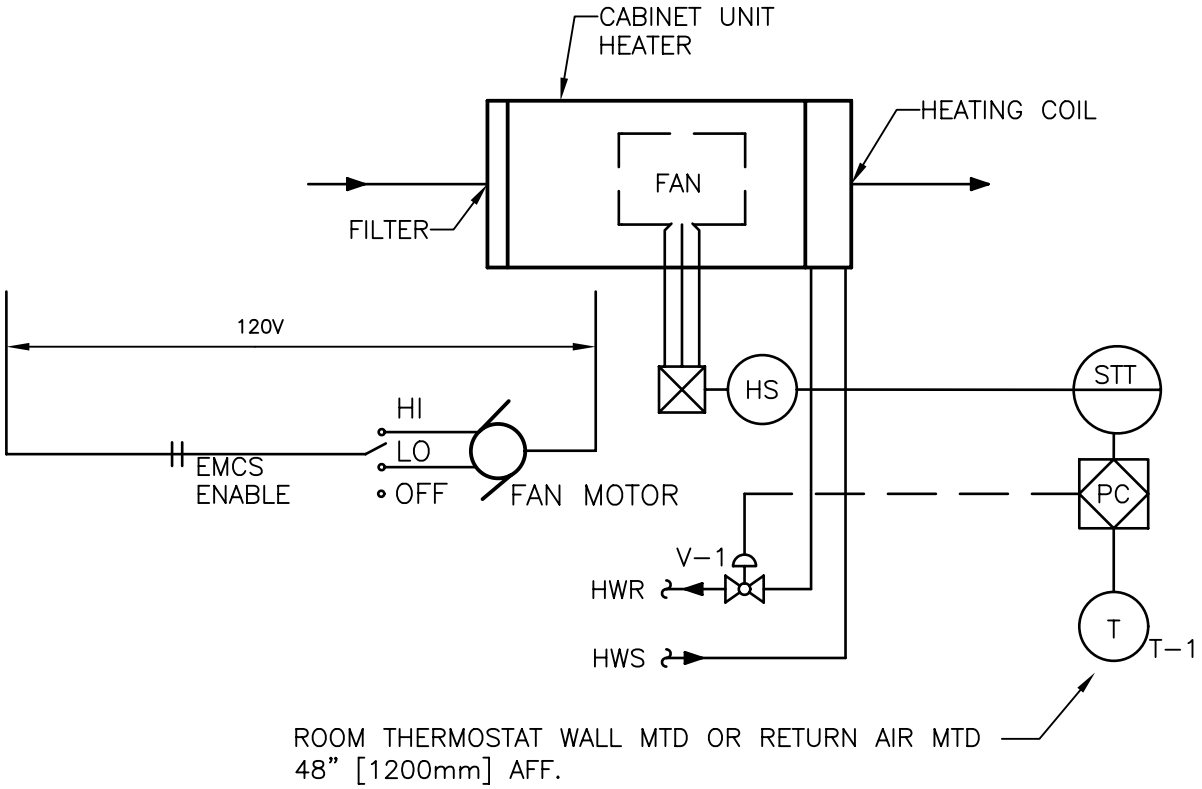

HOT WATER CABINET UNIT CONTROLS

#

NTS

DESIGNER'S NOTES:

1. CONNECT TO ECC NETWORK IS OPTIONAL.
2. PROVIDE NON-DDC CLOSED LOOP AUTOMATIC TEMPERATURE CONTROLS FOR THE HOT WATER CABINET UNIT HEATER. COORDINATE THE INTERFACE, IF ANY, WITH THE DDC SYSTEM FOR APPLICATIONS SUCH AS ALARM INDICATION WITH PROJECT SCOPE OF WORK.
3. PROVIDE A STEP CONTROL FOR NON-CRITICAL APPLICATIONS. WHEN TEMPERATURE FALLS BELOW SET POINT, THE CABINET UNIT HEATER SHALL BE ENERGIZED AND THE TWO-POSITION, TWO-WAY VALVE SHALL OPEN.

Department of Veterans Affairs

DETAIL TITLE / HOT WATER CABINET UNIT CONTROLS

SCALE :NONE

DATE ISSUED :DECEMBER 2008 CADD DETAIL NO. : SD238200-04.DWG

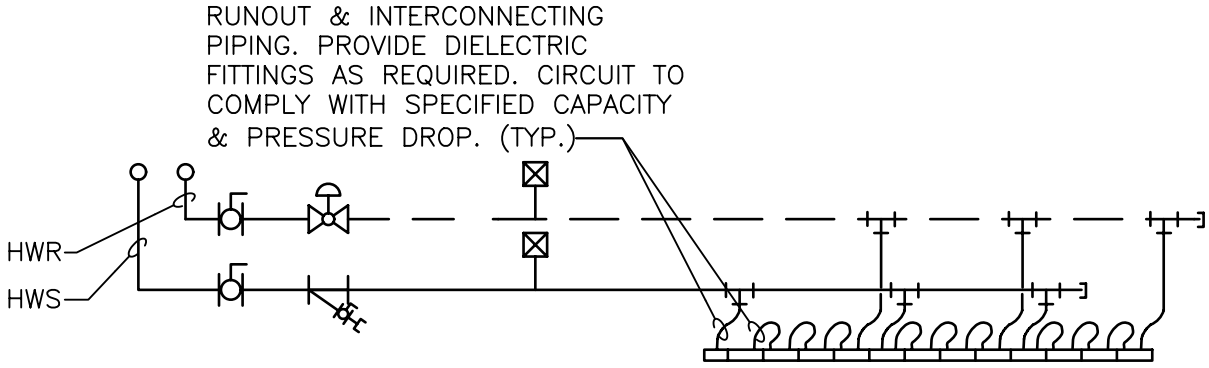

NOTE:

1. MINIMUM FLOW SHALL BE NO LESS THAN 0.5 GPM [1.9 LPM]

HYDRONIC RADIANT CEILING PANELS - PIPING CONNECTIONS

#

NTS

Department of Veterans Affairs

DETAIL TITLE / HYDRONIC RADIANT CEILING PANELS - PIPING CONNECTIONS

SCALE :NONE

DATE ISSUED: DECEMBER 2008 CAD DETAIL NO.: SD238200-05.DWG

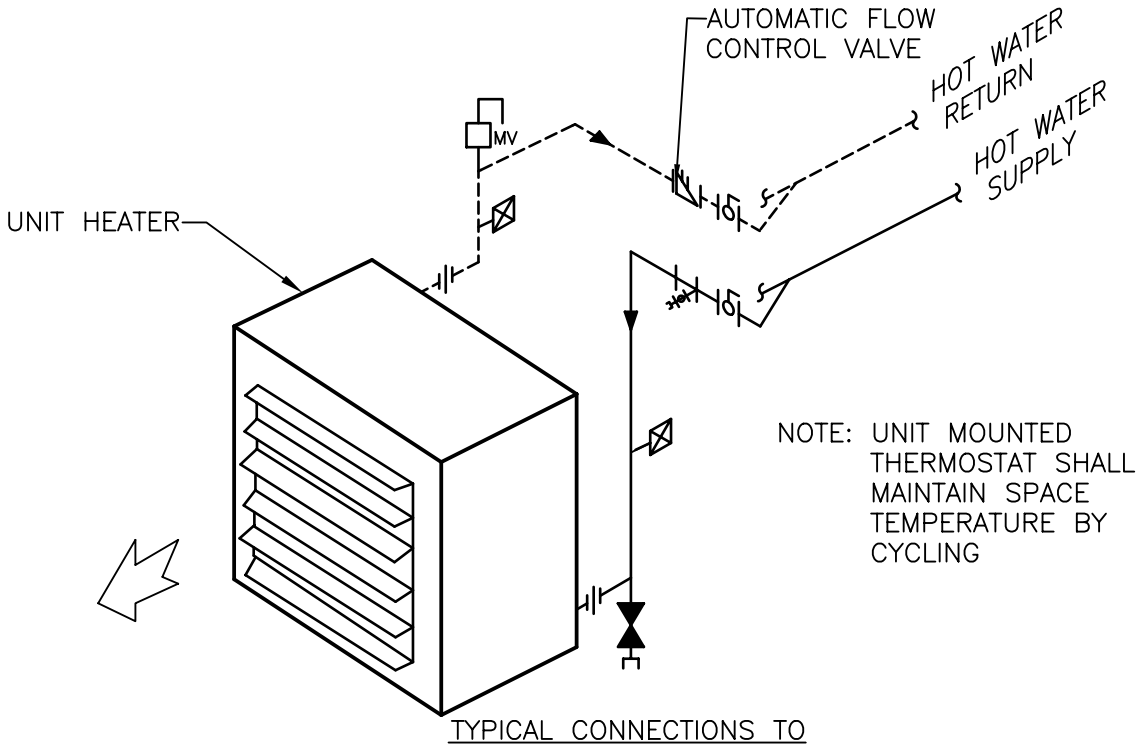

TYPICAL CONNECTIONS TO
HORIZONTAL HOT WATER UNIT HEATER

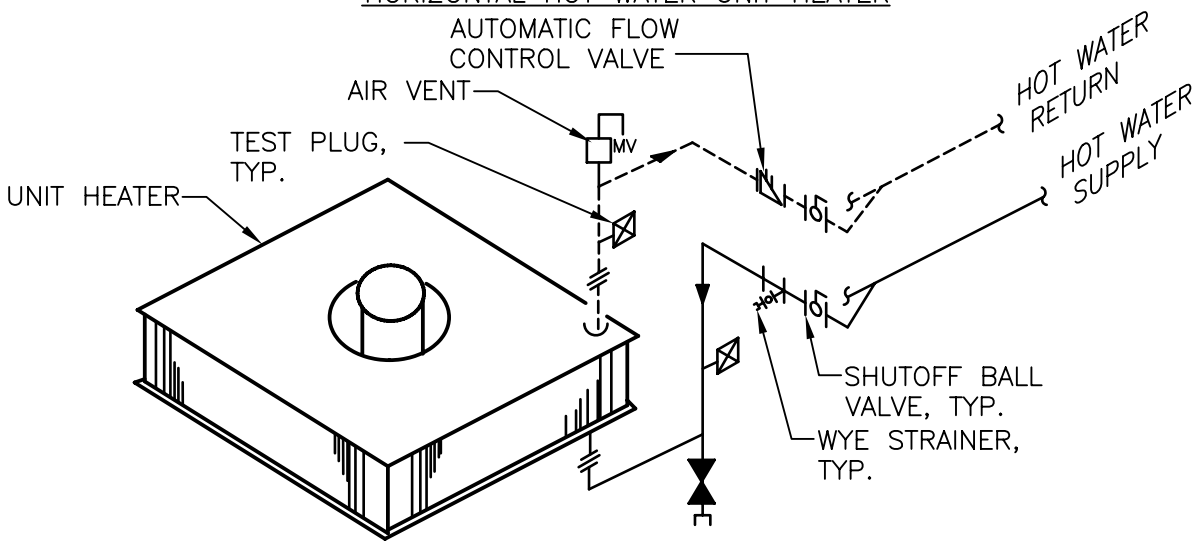

TYPICAL CONNECTIONS TO
VERTICAL HOT WATER UNIT HEATER

UNIT HEATERS (HOT WATER) - PIPING CONNECTIONS

#

NTS

Department of Veterans Affairs

DETAIL TITLE / UNIT HEATERS (HOT WATER) - PIPING CONNECTIONS

SCALE :NONE

DATE ISSUED: DECEMBER 2008 CAD DETAIL NO.: SD238200-06.DWG

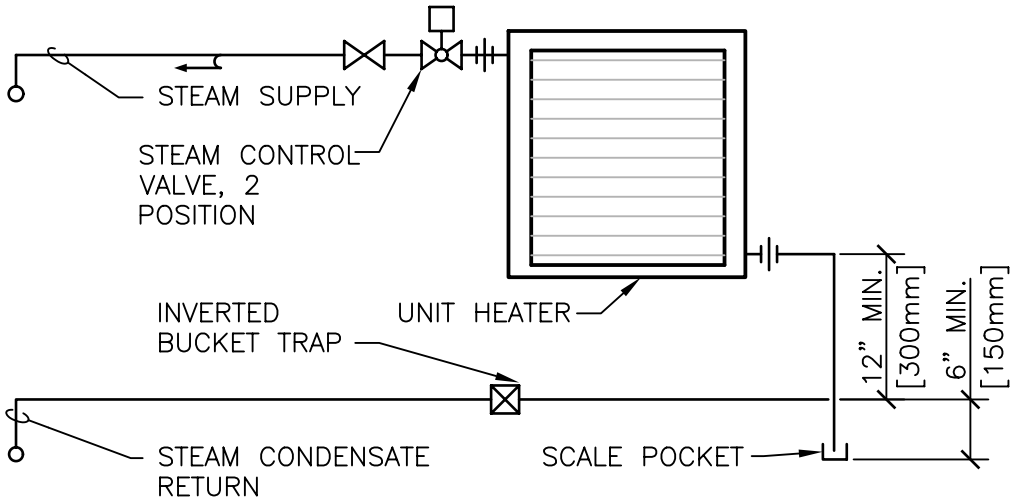

PIPING CONNECTIONS TO HORIZONTAL TYPE STEAM UNIT HEATER

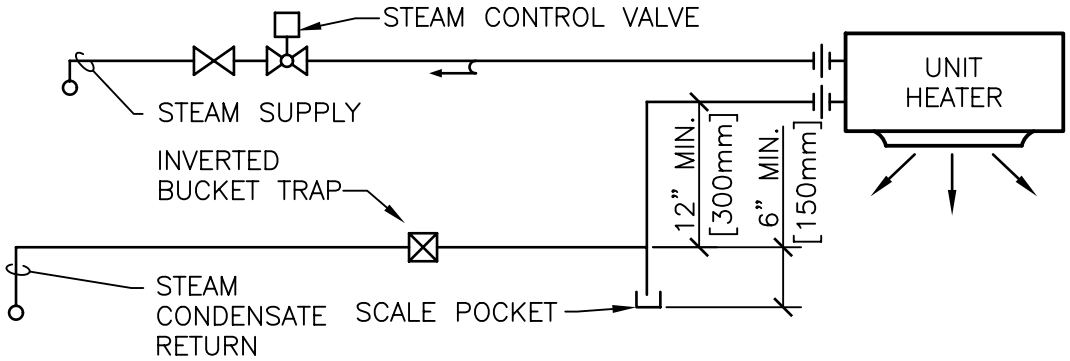

PIPING CONNECTIONS TO VERTICAL TYPE STEAM UNIT HEATER

NOTES:
1.UNIT MOUNTED THERMOSTAT SHALL MAINTAIN SPACE TEMPERATURE BY CYCLING THE FAN. THE CONTROL VALVE SHALL BE INTERLOCK WITH THE FAN.

UNIT HEATERS (STEAM) PIPING CONNECTIONS

#

NTS

Department of Veterans Affairs

DETAIL TITLE / UNIT HEATERS (STEAM) PIPING CONNECTIONS

SCALE :NONE

DATE ISSUED: DECEMBER 2008 CAD DETAIL NO.: SD238200-07.DWG

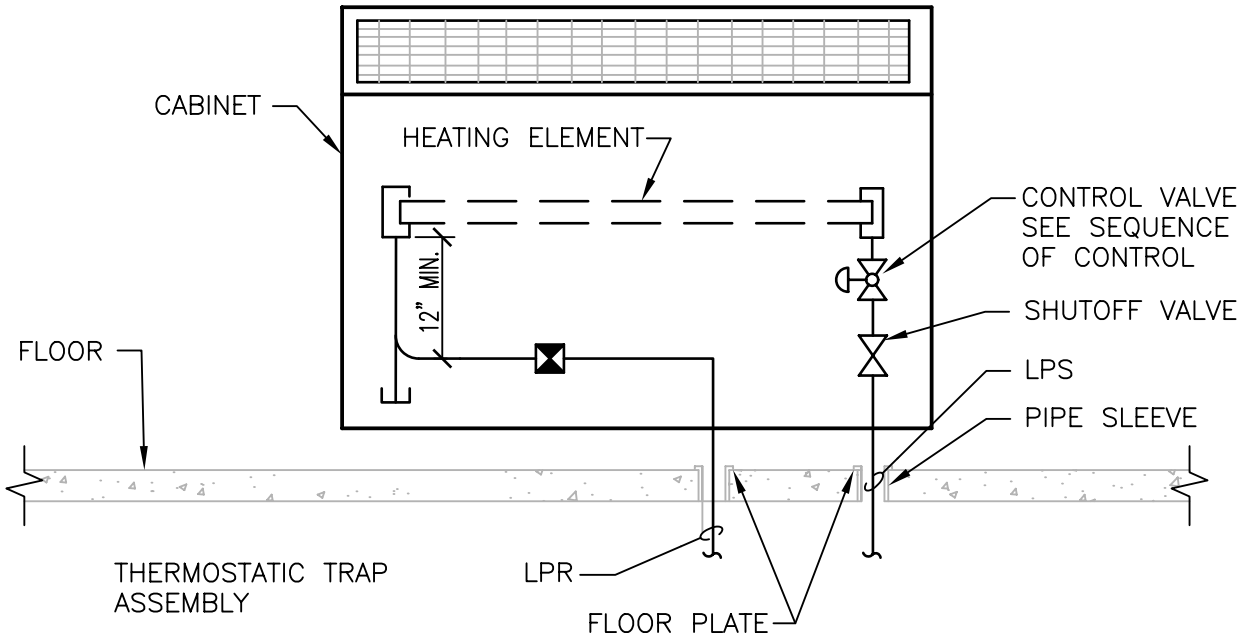

CONVECTOR-STEAM PIPING CONNECTION

#

NTS

DESIGNER'S NOTE:
USE THIS DETAIL WHEN THE CONVECTOR (OR STEAM RADIATOR) IS USED IN CONJUNCTION WITH AN AIR TERMINAL UNIT TO SERVE AN OCCUPY SPACE, REPLACE RADIATOR VALVE WITH A STEAM CONTROL VALVE AND CONTROL SPACE WITH COMMON THERMOSTAT.

Department of Veterans Affairs

DETAIL TITLE / CONVECTOR-STEAM PIPING CONNECTION

SCALE :NONE

DATE ISSUED: DECEMBER 2008 CAD DETAIL NO.: SD238200-08.DWG

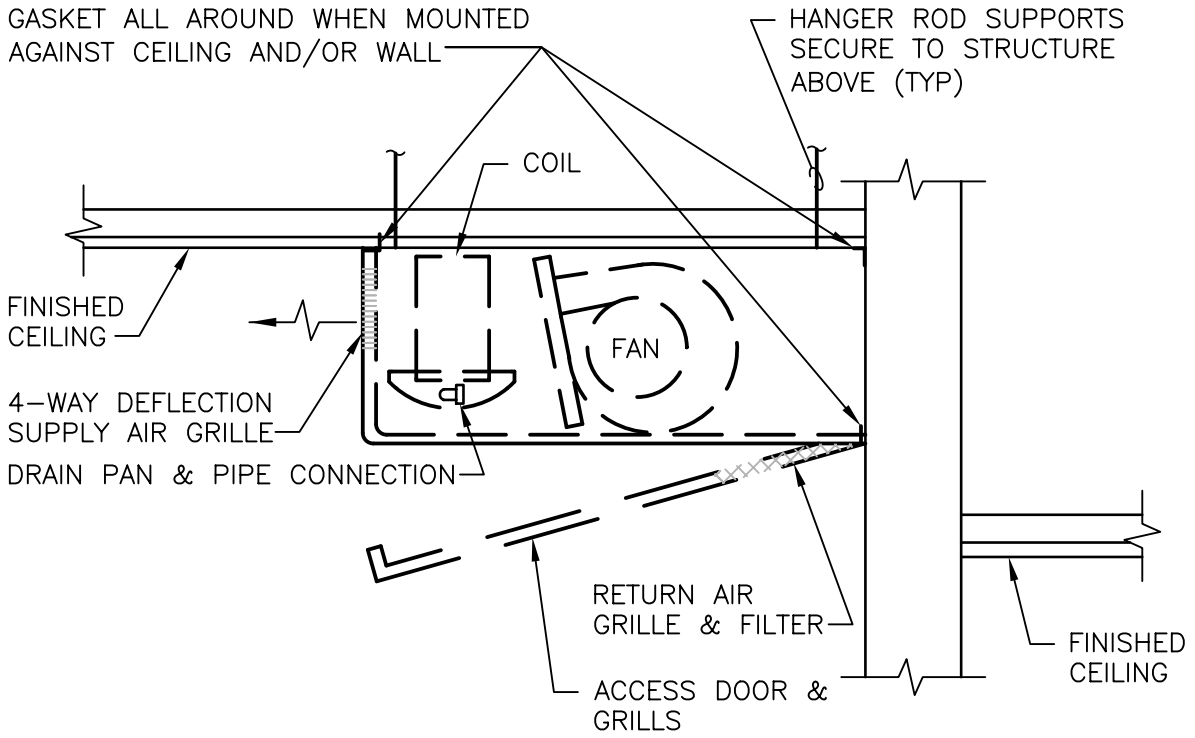

NOTE:
UNLESS OTHERWISE NOTED, ALL UNITS SHALL BE MOUNTED AGAINST FINISHED CEILING.

FAN COIL UNIT - HORIZONTAL EXPOSED

#

NTS

Department of Veterans Affairs

DETAIL TITLE / FAN COIL UNIT - HORIZONTAL EXPOSED

SCALE :NONE

DATE ISSUED: DECEMBER 2008 CAD DETAIL NO.: SD238200-09.DWG

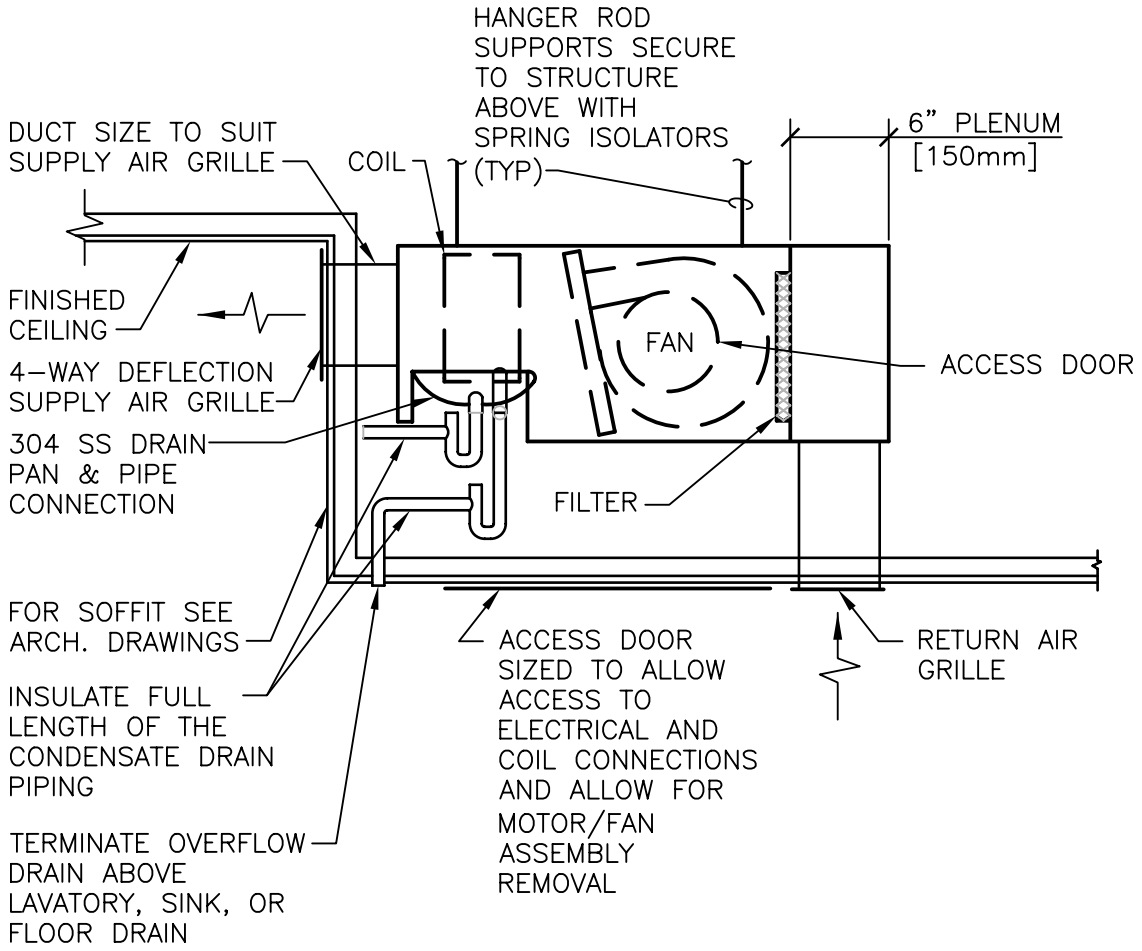

NOTES:

1. SIX INCH [150mm] PLENUM AS SHOWN SHALL BE SUPPLIED BY MANUFACTURER OF FAN COIL UNIT.
2. SEE DETAIL FOR SUPPLY & RETURN PIPING CONNECTIONS.

   PROVIDE ACCESS FOR FILTER REMOVAL.
3. SEE FAN COIL UNIT SCHEDULE FOR PIPE SIZES.
4. SUPPLY & RETURN GRILLES SHALL BE SIZED TO SUIT CONNECTIONS ON FAN COIL UNIT. DUCTWORK SHALL SUIT GRILLES AND FAN COIL UNIT FURNISHED.

FAN COIL UNIT - HORIZONTAL CONCEALED

#

NTS

Department of Veterans Affairs

DETAIL TITLE / FAN COIL UNIT - HORIZONTAL CONCEALED

SCALE :NONE

DATE ISSUED: DECEMBER 2008 CAD DETAIL NO.: SD238200-10.DWG

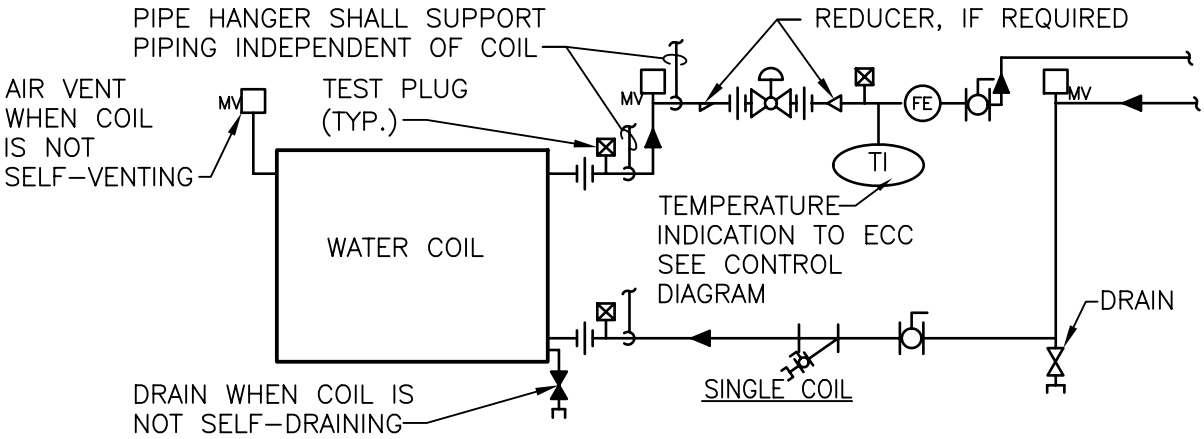

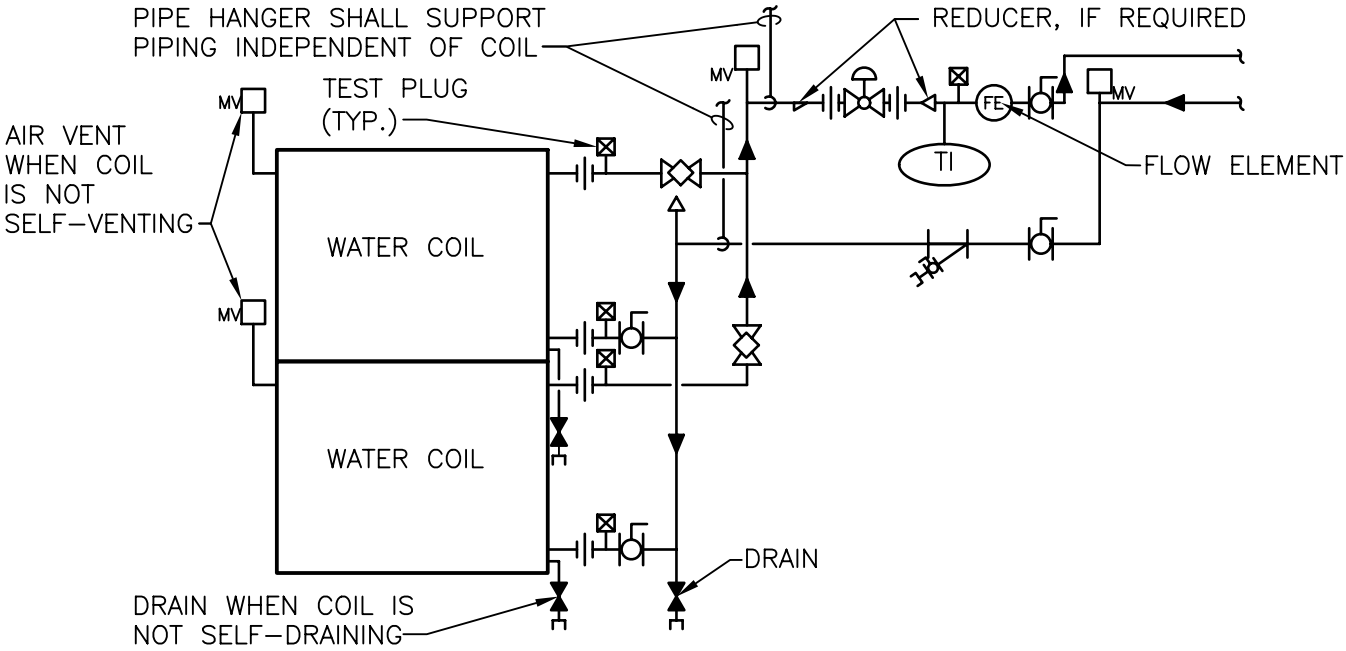

NOTE:

1. WHEN COIL IS INCLUDED IN CASING MOUNTED ON VIBRATION ISOLATORS THE FIRST 2 HANGERS FOR EACH PIPE SHALL BE SPRING & NEOPRENE TYPE. TYPE "H" FOR 4" [100mm]ø PIPE & SMALLER. TYPE "H-P" FOR 5" [125mm]ø PIPE & LARGER.

2. PIPING SHALL BE INSTALLED IN SUCH MANNER THAT IT WILL NOT BLOCK THE SWING OR USE OF ACCESS DOORS OR PANELS; NEITHER SHALL IT BLOCK THE SERVICING OF FILTERS, VALES, OR EQUIPMENT.

3. THE FLOW ELEMENT MAY BE INSTALLED IN THE SUPPLY PIPING IF THE REQUIRED MINIMUM UPSTREAM AND DOWNSTREAM DIMENSIONS CANNOT BE OBTAINED IN THE RETURN PIPING.

WATER COILS - PIPING CONNECTIONS

#

NTS

DESIGNER'S NOTE:
BALANCING VALUES MAY BE OMITTED IF REVERSE PIPING PROVIDED.

Department of Veterans Affairs

DETAIL TITLE / WATER COILS - PIPING CONNECTIONS

SCALE :NONE

DATE ISSUED: DECEMBER 2008 CAD DETAIL NO.: SD238216-01.DWG

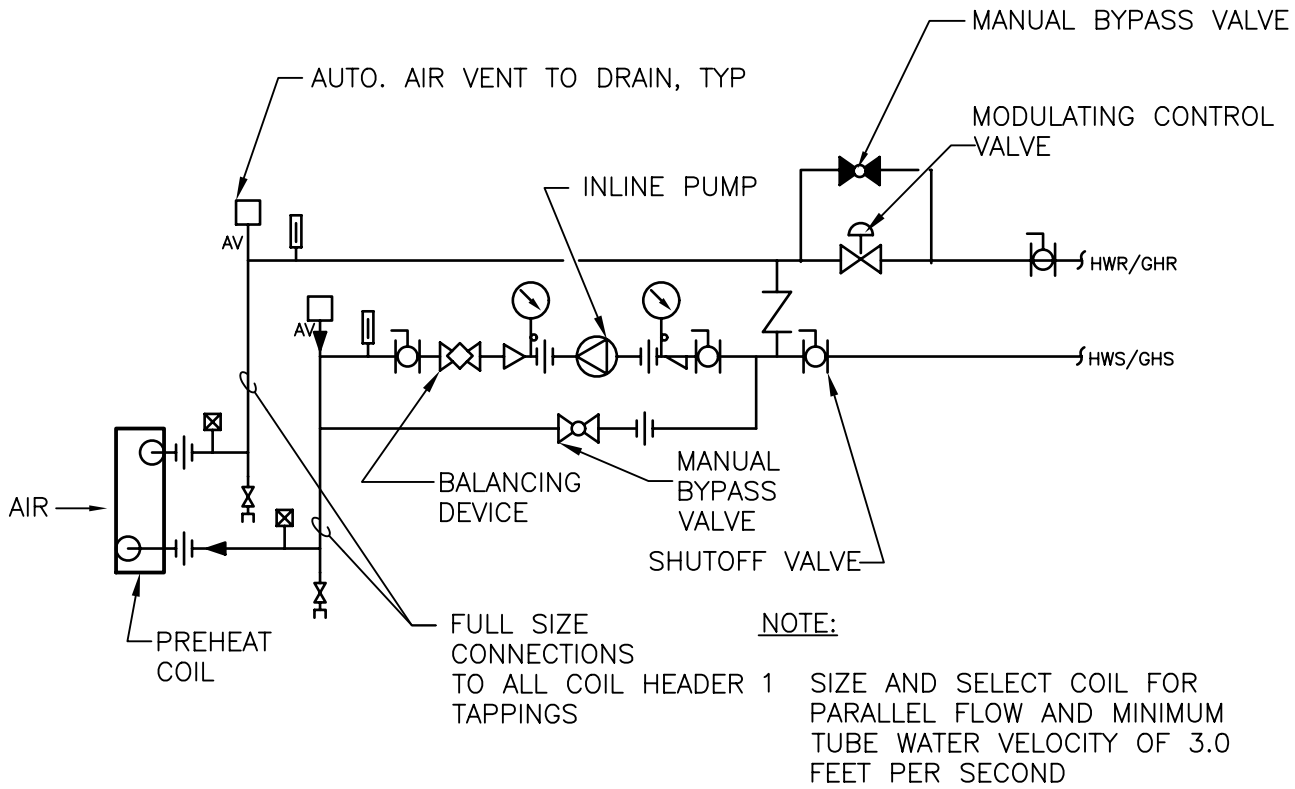

NOTE:

SIZE AND SELECT COIL FOR PARALLEL FLOW AND MINIMUM TUBE WATER VELOCITY OF 3.0 FEET PER SECOND

PREHEAT COIL (HOT WATER) - PIPING CONNECTIONS

#

NTS

DESIGNERS NOTE:

1.COORDINATE WITH HVAC DESIGN MANUAL.

Department of Veterans Affairs

DETAIL TITLE / PREHEAT COIL (HOT WATER) - PIPING CONNECTIONS

SCALE :NONE

DATE ISSUED: DECEMBER 2008

CAD DETAIL NO.: SD238216-02.DWG

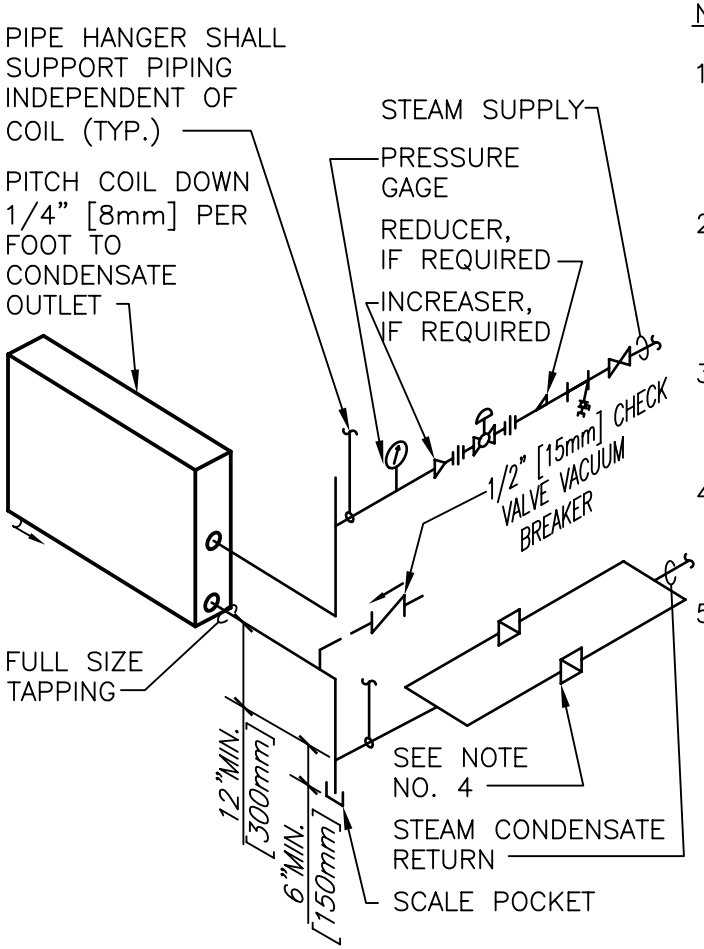

NOTE:

1. WHEN COIL IS INCLUDED IN CASING MOUNTED ON VIBRATION ISOLATOR UNITS, THE RUNOUT PIPING FOR CONNECTIONS TO COIL SHALL BE INSTALLED WITH SWING JOINTS TO ALLOW FOR THE VIBRATION.
2. PIPING SHALL BE INSTALLED IN SUCH MANNER THAT IT WILL NOT BLOCK THE SWING OR USE OF ACCESS DOORS OR PANELS; NEITHER SHALL IT BLOCK THE SERVICING OF FILTERS, VALVES, OR EQUIPMENT.
3. TRAP EACH COIL SEPARATELY WHEN INSTALLED IN A BANK OF TWO OR MORE HIGH. ALSO PROVIDE SEPARATE VACUUM BREAKER FOR EACH COIL.
4. TWO TRAP ASSEMBLIES IN PARALLEL ARE SHOWN. TWO TRAPS REQUIRED WHEN CONDENSATE LOAD IS 5,000 LBS/HR [2400 KG/HR] OR GREATER.
5. SUPPLY & RETURN PIPES ARE SHOWN FROM SAME END. REHEAT COIL MAY HAVE SUPPLY & RETURN PIPES FROM OPPOSITE ENDS.

STEAM COIL - PIPING CONNECTIONS

#

NTS

DESIGNER'S NOTE:
FOR VACUUM RETURN SYSTEMS CONNECT 1/2" [15mm] CHECK VALVE VACUUM BREAKER INTO DISCHARGE SIDE OF TRAP SET. CHANGE F & T TRAP SET TO SHOW PIPING LOCATION CONNECTION.

Department of Veterans Affairs

DETAIL TITLE / STEAM COIL - PIPING CONNECTIONS

SCALE :NONE

DATE ISSUED: DECEMBER 2008

CAD DETAIL NO.: SD238216-03.DWG