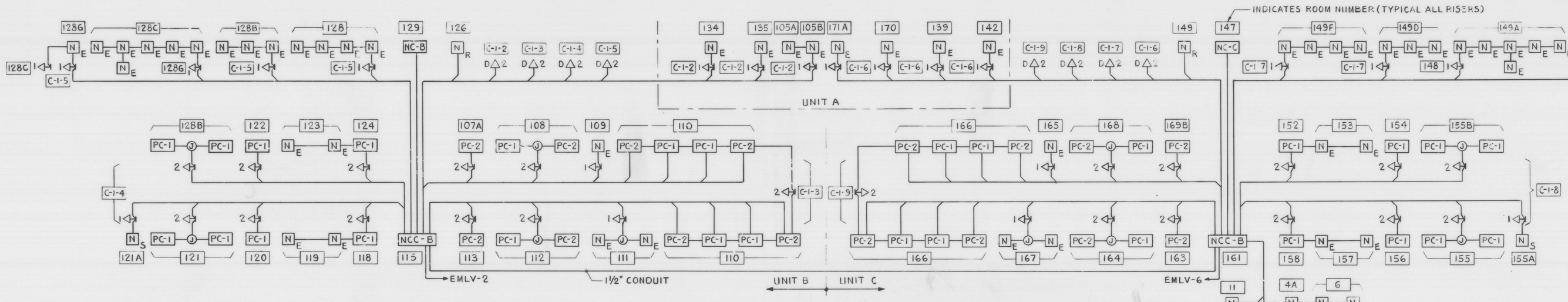

NURSE CALL SYSTEM RISER DIAGRAM

NOTE

1. FOR LEGEND AND NOTES SEE DRAWING 8-E-1.
2. FOR TELEPHONE SYSTEM RISER DIAGRAM, SEE DRAWING 8-E-20.

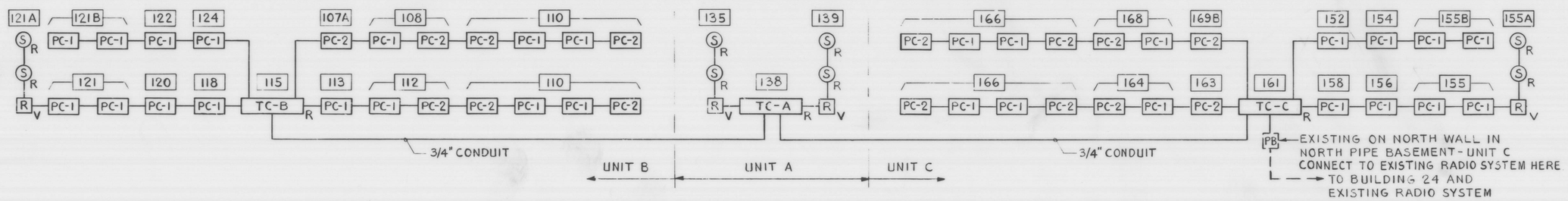

RADIO SYSTEM RISER DIAGRAM

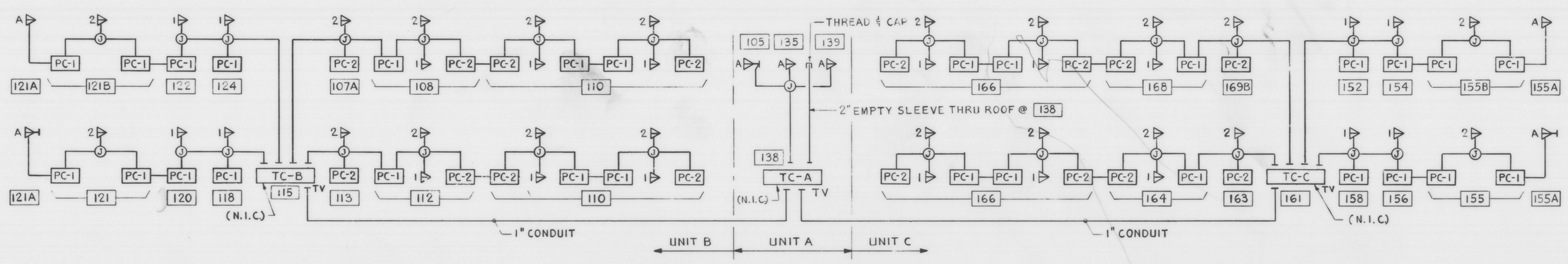

TV SYSTEM RISER DIAGRAM

WALL TYPE	DESK TYPE	HAND SET	HANDS FREE	STAFF	MASTER				
	✓	✓			✓	1	NURSE/CLERK STATION	ROOM 129	× × ×
✓				✓		2	PREP. AND TREATMENT	ROOM 128G	×
✓				✓		3	EXAM. AND TREATMENT	ROOM 134	×
	✓	✓			✓	4	CHIEF OF SERVICE *	ROOM 140	×
	✓	✓		✓		5	DOCTOR'S OFFICE	ROOM 143	× ×
	✓	✓			✓	6	SECRETARY	ROOM 139A	× × ×
✓			✓		✓	7	CATHETERI-ZATION	ROOM 170	× ×
✓			✓	✓		8	CYSTOSCOPY	ROOM 171	× × ×
✓			✓	✓		9	WORK ROOM	ROOM 171B	× × × ×
✓			✓	✓		10	DARK ROOM	ROOM 171C	× × × ×
✓			✓		✓	11	CONTROL	ROOM 171D	× ×
	✓	✓			✓	12	G.U. DOCTOR'S OFFICE	ROOM 172A	×
	✓	✓			✓	13	NURSE/CLERK STATION	ROOM 147	× ×
✓					✓	14	PREP AND TREATMENT	ROOM 148	× ×
✓					✓	15	G.U. TECH. OFFICE	ROOM 169	× ×
✓					✓	16	EXAM. AND TREATMENT	ROOM 142	×
✓				✓	✓	17	COVERED WALKWAY		

× – TWO WAY CONVERSATION
* – CHIEF OF SERVICE SHALL BE EQUIPPED WITH TRANSFER TO SECRETARY ARRANGEMENT.

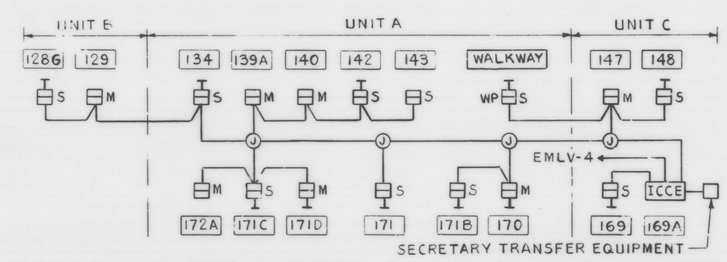

INTERCOM SYSTEM RISER DIAGRAM AND CHART

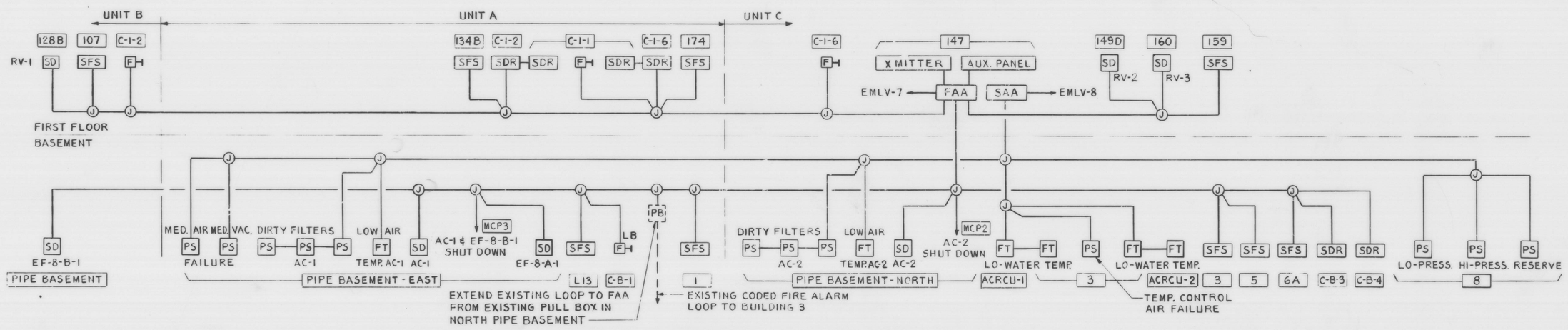

SIGNAL AND FIRE ALARM RISER DIAGRAM

AS-BUILT

2-5-1-0963

SYSTEMS RISER DIAGRAMS
BUILDING NUMBER 8
60-BED SPINAL CORD INJURY SERVICE
VETERANS ADMINISTRATION
VAH BROCKTON, MASS.

Drawn A.K. Proj. Mgr. R.J.B.
Checked R.W.P. Date MAY 8, 73

REVISIONS

ALONZO B. REED INC.
BOSTON, MASS.
ARCHITECTS-ENGINEERS

APPROVED: PROJECT DIRECTOR

DRAWING NUMBER 8 E-19

Sheet 19 of 20
Proj. No. 525-005

THREE INCHES EQUALS ONE FOOT | ONE AND ONE HALF INCHES EQUALS ONE FOOT | ONE INCH EQUALS ONE FOOT | THREE QUARTER INCH EQUALS ONE FOOT | ONE HALF INCH EQUALS ONE FOOT | THREE EIGHTH INCH EQUALS ONE FOOT | ONE QUARTER INCH EQUALS ONE FOOT | ONE EIGHTH INCH EQUALS ONE FOOT

RETURN TRACINGS TO PLAN FILE

FILE FOLDER NO. 2D

BLDG. #8

SYSTEMS RISER DIAGRAM

ELEC 525-005

DRAWING 8 E-19

MAY 1973 SHEET 19 of 20