THROUGH–PENETRATION FIRESTOP SYSTEMS
F RATINGS – 1, 2 ,3 AND 4 HR. (SEE ITEM 3)
T RATINGS – 3/4 AND 1 HR. (SEE ITEM 3)
L RATINGS AT AMBIENT– 4 OR 7 CFM (SEE ITEM 3)
L RATINGS AT 400F– 2 OR 3 CFM (SEE ITEM 3)

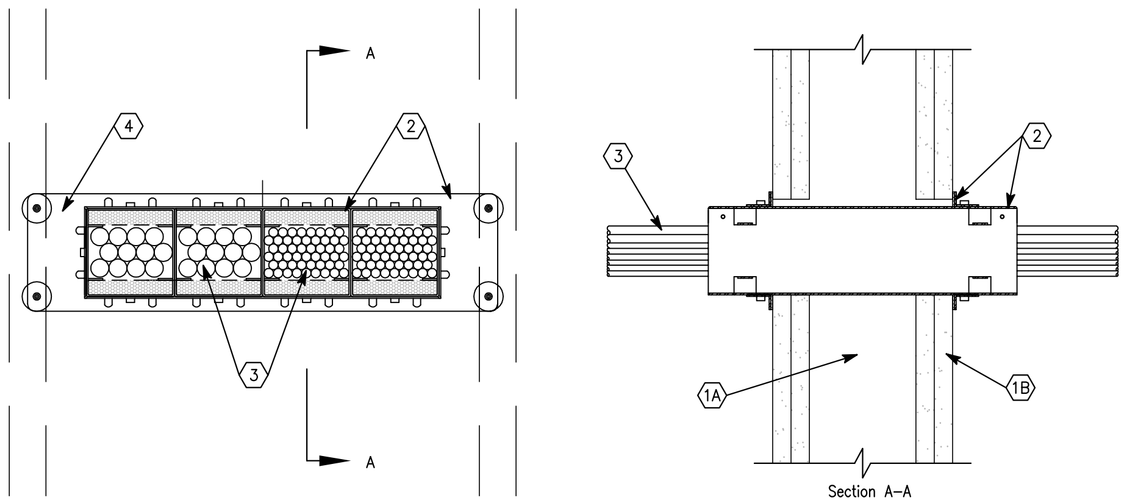

Section A–A

1. WALL ASSEMBLY – THE 1,2,3 OR 4 HR FIRE–RATED GYPSUM BOARD/STUD WALL ASSEMBLY SHALL BE CONSTRUCTED OF THE MATERIALS AND IN THE MANNER DESCRIBED WITHIN THE INDIVIDUAL U300 OR U400 SERIES WALL OR PARTITION DESIGNS IN THE UL FIRE RESISTANCE DIRECTORY AND SHALL INCORPORATE THE FOLLOWING CONSTRUCTION FEATURES:
   A. STUDS – WALL FRAMING SHALL CONSIST OF EITHER WOOD STUDS OR STEEL CHANNEL STUDS. WOOD STUDS TO CONSIST OF NOM 2 BY 4 IN. LUMBER SPACED MAX 16 IN. OC. STEEL STUDS TO BE MIN 3–1/2 IN. WIDE AND SPACED MAX 24 IN. OC.
   B. GYPSUM BOARD* – THICKNESS, TYPE, NUMBER OF LAYERS AND FASTENERS AS SPECIFIED IN THE INDIVIDUAL WALL AND PARTITION DESIGN. OPENING IN GYPSUM BOARD TO BE MAX 1/4 IN. LARGER THEN WIDTH AND HEIGHT DIMENSIONS OF FIRESTOP DEVICE(S).
   THE HOURLY F RATING OF THE FIRESTOP SYSTEM IS DEPENDENT UPON THE HOURLY RATING OF THE WALL IN WHICH IT IS INSTALLED.

2. FIRESTOP SYSTEM – ONE, TWO, THREE, FOUR OR SEVEN FIRESTOP DEVICE MODULES GANGED TOGETHER. EACH FIRESTOP DEVICE MODULE CONSISTS OF A 3 BY 3 BY 10–1/2 IN. LONG GALV STEEL TUBE WITH AN INTUMESCENT MATERIAL LINING. FIRESTOP DEVICE MODULES TO BE INSTALLED IN ACCORDANCE WITH THE ACCOMPANYING INSTALLATION INSTRUCTIONS. THE SPACE BETWEEN THE FIRESTOP DEVICE MODULE(S) AND THE PERIPHERY OF THE OPENING SHALL BE MIN 0 IN. TO MAX 1/8 IN. FIRESTOP DEVICE MODULE(S) SECURED IN PLACE BY MEANS OF STEEL WALL PLATES INSTALLED WITH GASKETING MATERIAL SUPPLIED WITH PRODUCT. STEEL WALL PLATES INSTALLED ON BOTH SIDES OF WALL AND SECURED TO EACH DEVICE BY MEANS OF STEEL SET SCREWS PROVIDED WITH DEVICE. EACH FOUR–AND SEVEN–GANG STEEL WALL PLATE SHALL BE FASTENED TO THE STUDS WITH STEEL SCREWS SIZED TO EXTEND THROUGH THE GYPSUM BOARD LAYERS AND PENETRATE 1/2 IN. INTO THE FRAMING MEMBER. EACH FIRESTOP DEVICE MODULE IS TO BE INSTALLED WITH ENDS PROJECTING AN EQUAL DISTANCE BEYOND EACH SURFACE OF THE WALL ASSEMBLY. AS AN ALTERNATE, THE FOUR–AND SEVEN GANG STEEL WALL PLATES MAY BE INSTALLED DIRECTLY AGAINST THE STUDS FOR WALLS HAVING 16 AND 24 IN. CENTER–TO–CENTER STUD SPACING, RESPECTIVELY, PRIOR TO INSTALLATION OF THE GYPSUM BOARD LAYERS. THE STEEL WALL PLATES SHALL BE SECURED TO THE STUD BY MEANS OF STEEL SCREWS. AFTER INSTALLATION OF THE STEEL WALL PLATES AND FIRESTOP DEVICE MODULES, THE GYPSUM BOARD SHALL BE INSTALLED AS SPECIFIED IN THE INDIVIDUAL U300 OR U400 DESIGN WITH A MAXIMUM 1/8 IN. GAP BETWEEN THE FIRESTOP DEVICE MODULE AND THE CUTOUT IN THE GYPSUM BOARD. GAP BETWEEN THE FIRESTOP DEVICE MODULE AND THE CUTOUT IN THE GYPSUM BOARD MAY BE FILLED WITH GYPSUM JOINT COMPOUND OR FILL MATERIAL (ITEM 4).

3. CABLES – WITHIN THE LOADING AREA FOR EACH FIRESTOP DEVICE MODULE, THE CABLES MAY REPRESENT A 0 TO 100 PERCENT VISUAL FILL. CABLE FILL TO BE DISTRIBUTED AT A UNIFORM HEIGHT ACROSS THE WIDTH OF THE FIRESTOP DEVICE MODULE. CABLES TO BE RIGIDLY SUPPORTED ON BOTH SIDES OF THE WALL ASSEMBLY. ANY COMBINATION OF THE FOLLOWING TYPES OF CABLES MAY BE USED:
   A. MAX 400 PAIR NO. 24 AWG (OR SMALLER) COPPER CONDUCTOR TELECOMMUNICATION CABLE WITH POLYVINYL CHLORIDE (PVC) JACKETING AND INSULATION.
   B. MAX FOUR PAIR NO. 22 AWG (OR SMALLER) COPPER CONDUCTOR DATA CABLE WITH PVC OR PLENUM RATED JACKETING AND INSULATION.
   C. MAX RG/U COAXIAL CABLE WITH FLUORINATED ETHYLENE INSULATION AND JACKETING.
   D. FIBER OPTIC CABLE WITH PVC OR POLYETHYLENE (PE) JACKET AND INSULATION HAVING A MAX DIAM OF 5/8 IN.
   E. OPTICAL FIBER RACEWAY+ – MAX 1–1/2 IN. DIAM (OR SMALLER) OPTICAL FIBER RACEWAY ("INNERDUCT") FORMED OF EITHER PVC OR POLYVINYLIDENE FLUORIDE (PVDF) WITH OPTICAL FIBER CABLE FILL. RACEWAYS INSTALLED IN ACCORDANCE WITH ARTICLE 770 OF THE NATIONAL ELECTRICAL CODE (NFPA 70)
   WHEN ITEM 3A IS USED, THE MAX SIZE OF CABLE IS 200 PAIR FOR THE 4 HR F RATING. OTHERWISE THE F RATING IS 2 HR. WHEN THE HOURLY RATING OF THE WALL ASSEMBLY IS 1 HR, THE T RATING IS 3/4 HR. WHEN THE HOURLY FIRE RATING OF THE WALL ASSEMBLY IS 2,3 OR 4 HR, THE T RATING IS 3/4 HR WHEN ITEM 3A IS USED. OTHERWISE THE T RATING IS 1 HR. WHEN ITEM 3A IS USED, THE L RATING FOR EACH FIRESTOP DEVICE MODULE WITH 100 PERCENT VISUAL FILL OF CABLE IS 7 CFM AT AMBIENT AND 2 CFM AT 400F. WHEN ITEM 3B, 3C OR 3D IS USED, THE L RATING FOR EACH FIRESTOP DEVICE MODULE WITH 100 PERCENT VISUAL FILL OF CABLE IS 7 CFM AT AMBIENT AND 2 CFM AT 400F.

4. FILL, VOID OR CAVITY MATERIAL* – SEALANT OR PUTTY – (NOT SHOWN) – AS AN ALTERNATE TO GYPSUM JOINT COMPOUND, THE GAP BETWEEN THE FIRESTOP DEVICE MODULE AND THE CUTOUT IN THE GYPSUM BOARD MAY BE SEALED WITH FILL MATERIAL ON EACH SIDE OF THE WALL ASSEMBLY WHEN FOUR–AND SEVEN–GANG STEEL WALL PLATES ARE INSTALLED DIRECTLY AGAINST THE WOOD OR STEEL STUDS.

*BEARING THE UL CLASSIFICATION MARK

1 CABLE PENETRATION MDF/IDF AND CABLE TRAY TRANSITIONS
NO SCALE

THROUGH–PENETRATION FIRESTOP SYSTEMS

SMOOTH PENETRATION – GYPSUM
SYSTEM NO. W–L–3137
F RATING – 1 AND 2 HR (SEE ITEM 1)
T RATING – 0 HR.

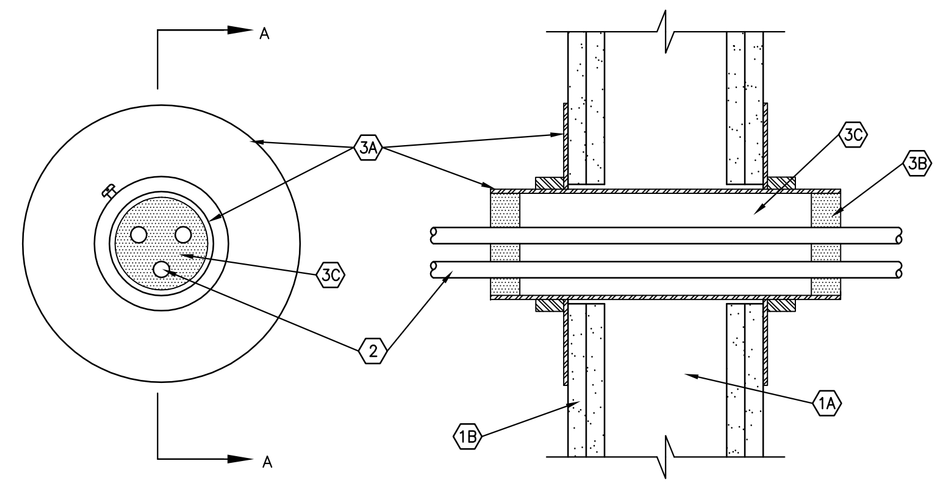

Section A–A

1. WALL ASSEMBLY – THE 1 OR 2 HR FIRE–RATED GYPSUM WALLBOARD/STUD WALL ASSEMBLY SHALL BE CONSTRUCTED OF THE MATERIALS AND IN THE MANNER DESCRIBED IN THE INDIVIDUAL U300 OR U400 SERIES WALL OR PARTITION DESIGNS IN THE UL FIRE RESISTANCE DIRECTORY AND SHALL INCLUDE THE FOLLOWING CONSTRUCTION FEATURES:
   A. STUDS – WALL FRAMING WALL CONSIST OF EITHER WOOD STUDS OR STEEL CHANNEL STUDS. WOOD STUDS TO CONSIST OF NOM 2 BY 4 IN. LUMBER SPACED 16 IN. O.C. STEEL STUDS TO BE MIN 3–5/8 IN. WIDE AND SPACED 24 IN. O.C.
   B. WALLBOARD, GYPSUM* –– 5/8 IN. THICK, 4 FT WIDE WITH SQUARE OR TAPERED EDGES. THE GYPSUM WALLBOARD TYPE, THICKNESS, NUMBER OF LAYERS, FASTENER TYPE AND SHEET ORIENTATION SHALL BE AS SPECIFIED IN THE INDIVIDUAL U300 OR U400 SERIES DESIGNS IN THE UL FIRE RESISTANCE DIRECTORY.
   THE HOURLY F RATING OF THE FIRESTOP SYSTEM IS EQUAL TO THE HOURLY FIRE RATING OF THE WALL ASSEMBLY IN WHICH IT IS INSTALLED.

2. CABLES –– AGGREGATE CROSS–SECTIONAL AREA OF CABLES IN SMOOTH SLEEVE TO BE MIN 8 PERCENT TO MAX 48 PERCENT OF THE AGGREGATE CROSS–SECTIONAL AREA OF THE SMOOTH SLEEVE. CABLES TO BE RIGIDLY SUPPORTED ON BOTH SIDES OF WALL ASSEMBLY. ANY COMBINATION OF THE FOLLOWING TYPES AND SIZES OF CABLES MAY BE USED:
   A. MAX 200 PAIR NO. 24 AWG (OR SMALLER) COPPER CONDUCTOR CABLE WITH POLYVINYL CHLORIDE (PVC) JACKETING AND INSULATION.
   B. MAX RG59/U (OR SMALLER) COAXIAL CABLE WITH FLOURINATED ETHYLENE INSULATION AND JACKETING.
   C. MAX 62.5/48 FIBER OPTIC CABLE WITH PVC INSULATION AND JACKETING.
   D. MAX 4 PAIR NO. 24 AWG (OR SMALLER) COPPER CONDUCTOR CATEGORY 5 WITH HYLAR INSULATION AND JACKET.

3. FIRESTOP SYSTEM –– THE FIRESTOP SYSTEM SHALL CONSIST OF THE FOLLOWING:
   A. FIRESTOP DEVICE * –– SMOOTH STEEL SLEEVE DEVICE INCORPORATING FLAT WASHERS SECURED BY SLIDING COMPRESSION COUPLERS. DEVICE SHALL BE INSTALLED IN ACCORDANCE WITH THE ACCOMPANYING INSTALLATION INSTRUCTIONS. DEVICE PROVIDED IN NOM 1, 2 AND 4 IN. SIZES. MAX DIAMETER OF OPENING IN WALL FOR 1, 2 AND 4" SIZE DEVICES ARE 1–1/4, 2–7/16 AND 4–1/2 IN. RESPECTIVELY.
   UNIQUE FIRE STOP PRODUCTS IN. –– SMOOTH PENETRATOR.
   B. FILL, VOID OR CAVITY MATERIAL* –– SEALANT –– MIN 1 IN. THICKNESS OF FILL MATERIAL APPLIED WITHIN THE SMOOTH SLEEVE, FLUSH WITH BOTH ENDS. SPECIFIED TECHNOLOGIES INC. – SPECSEAL SERIES 100 SEALANT OR SPECSEAL PUTTY.
   C. FILL VOID ON CAVITY MATERIAL –– MINERAL WOOL –– FILL VOID WITH FILL MATERIAL TO WITHIN 1 IN. OF SLEEVE ENDS.

2 CABLE PENETRATION OF FIREWALL
NO SCALE

THROUGH–PENETRATION FIRESTOP SYSTEMS
SMOOTH PENETRATION – BLOCK
SYSTEM NO. W–J–3048
F RATING – 2 HR.
T RATING – 0 HR.

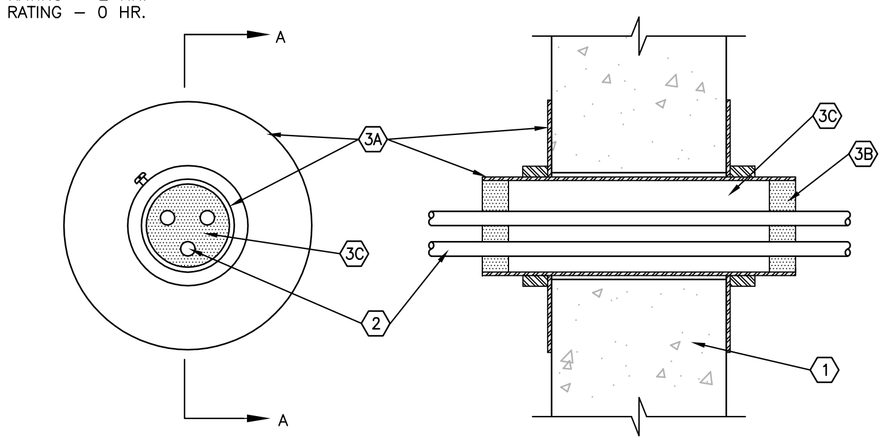

Section A–A

1. WALL ASSEMBLY –– MIN 6 IN. THICK REINFORCED LIGHTWEIGHT OR NORMAL WEIGHT (100–150 PCF) CONCRETE. WALL MAY ALSO BE CONSTRUCTED OF ANY UL CLASSIFIED CONCRETE BLOCKS*.
   SEE CONCRETE BLOCKS (CATZ) CATEGORY IN THE FIRE RESISTANCE DIRECTORY FOR NAMES OF MANUFACTURERS.

2. CABLES –– AGGREGATE CROSS–SECTIONAL AREA OF CABLES IN SMOOTH SLEEVE TO BE MIN 8 PERCENT TO MAX 48 PERCENT OF THE AGGREGATE CROSS–SECTIONAL AREA OF THE SMOOTH SLEEVE. CABLES TO BE RIGIDLY SUPPORTED ON BOTH SIDES OF WALL ASSEMBLY. ANY COMBINATION OF THE FOLLOWING TYPES AND SIZES OF CABLES MAY BE USED:
   A. MAX 200 PAIR NO. 24 AWG (OR SMALLER) COPPER CONDUCTOR CABLE WITH POLYVINYL CHLORIDE (PVC) JACKETING AND INSULATION.
   B. MAX RG59/U (OR SMALLER) COAXIAL CABLE WITH FLOURINATED ETHYLENE INSULATION AND JACKETING.
   C. MAX 62.5/125, 48 FIBER OPTIC CABLE WITH PVC INSULATION AND JACKETING.
   D. MAX 4 PAIR NO. 24 AWG (OR SMALLER) COPPER CONDUCTOR CATEGORY 5 WITH HYLAR INSULATION AND JACKET.

3. FIRESTOP SYSTEM –– THE FIRESTOP SYSTEM SHALL CONSIST OF THE FOLLOWING
   A. FIRESTOP DEVICE* –– SMOOTH STEEL SLEEVE DEVICE INCORPORATING FLAT WASHERS SECURED BY SLIDING COMPRESSION COUPLERS. DEVICE SHALL BE INSTALLED IN ACCORDANCE WITH THE ACCOMPANYING INSTALLATION INSTRUCTIONS. DEVICE PROVIDED IN NOM 1, 2, AND 4 IN. SIZES. MAX DIAMETER OF OPENING IN WALL FOR 1, 2 AND 4 IN. SIZE DEVICES ARE 1–1/4, 2–7/16 AND 4–1/2 IN. RESPECTIVELY.
   UNIQUE FIRE STOP PRODUCTS, –– SMOOTH PENETRATOR.
   B. FILL, VOID OR CAVITY MATERIAL* –– SEALANT –– MIN 1 IN. THICKNESS OF FILL MATERIAL APPLIED WITHIN THE SMOOTH SLEEVE, FLUSH WITH BOTH ENDS. SPECIFIED TECHNOLOGIES INC. –– SPECSEAL SERIES 100 SEALANT OR SPECSEAL PUTTY.
   C. FILL VOID ON CAVITY MATERIAL –– MINERAL WOOL –– FILL VOID WITH FILL MATERIAL TO WITHIN 1 IN. OF SLEEVE ENDS.

*BEARING THE UL CLASSIFICATION MARKING.

3 CABLE PENETRATION OF MASONRY FIREWALL
NO SCALE

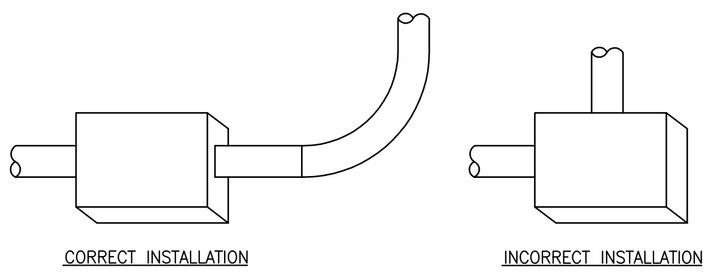

NOTE:

CONTRACTOR SHALL NOT INSTALL JUNCTION BOXES WITH CONDUCTS EXITING AT 90'. ALL CONDUCTS EXITING PULL BOXES WILL SWEEP OUT AT THE OPPOSITE END OF THE JUNCTION BOX.

4 DETAIL - INSTALLATION JUNCTION BOX
NO SCALE

FULLY SPRINKLERED

Revisions:	Date

CONSULTANTS:

ARCHITECT/ENGINEERS:

HDR Architecture, Inc
1101 King Street | Suite 400 | Alexandria, Virginia 22314-2944 | 703.518.8500
5426 Bay Center Drive | Suite 400 | Tampa, Florida 33609-3444 | 813.282.2493

Drawing Title: TELECOMUNICATIONS DETAILS SHEET 2
Approved: Project Director

Project Title: V.A. RICHMOND POLYTRAUMA TRANSITIONAL REHABILITATION CENTER
Location: HUNTER HOLMES McGUIRE
Date: 07/24/2008 | Checked | Drawn: GRB

Project Number: V101BP 0241 652-307
Building Number
Drawing Number: ES4-105
Dwg. of

Office of Facilities Management
Department of Veterans Affairs

VA FORM 08–6231, OCT 1978