115E~1.DWG – PLOTTED AT 7:30 AM ON 10-13-97 FROM STATION 19

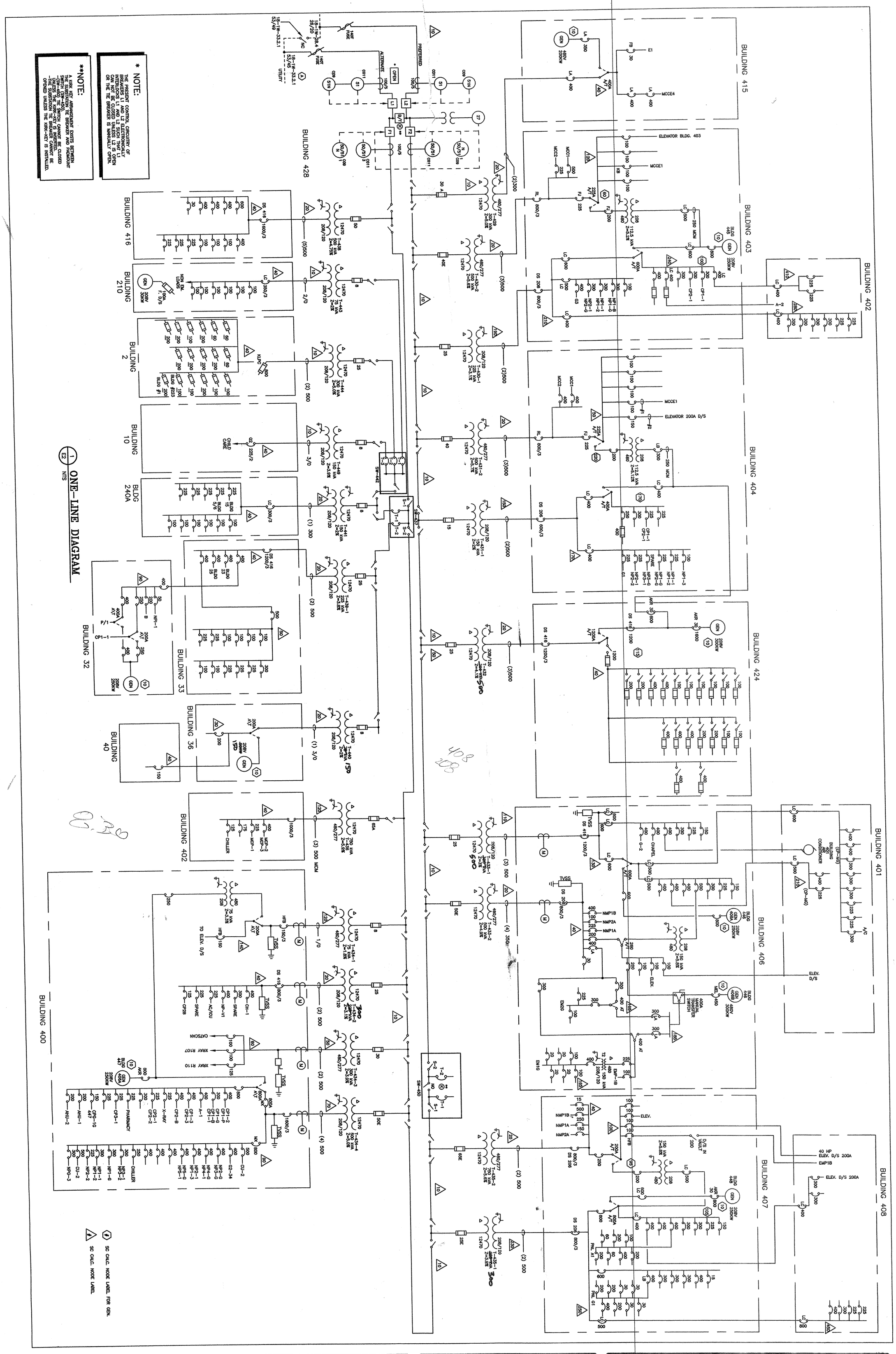

1 E2 ONE-LINE DIAGRAM
NTS

NOTE THAT THIS DRAWING IS A ONE LINE DIAGRAM OF THE DISTRIBUTION SYSTEM AFTER COMPLETION OF THE WORK ON THIS PROJECT.

E 1 1

DATE: 11-03-97	
SCALE: AS SHOWN	
PLAN FILE #: 96115	
DRAWN BY: DDH	
DESIGNED BY: LJS	
CHECKED BY: RJL	
REVISED:	

ONE-LINE DIAGRAM OF DISTRIBUTION SYSTEM AFTER COMPLETION OF THIS PROJECT.

CORRECT ELECTRICAL DEFICIENCIES
1997
V.A. MEDICAL CENTER TOMAH, WI.
PROJECT NO. 676-97-104

The United States
Department of Veterans Affairs
Medical Center
Tomah, Wisconsin

LANG Associates, Incorporated
Consulting Engineers
Electrical and Automation Specialists
903 S. 17th Ave.
Wausau, WI 54401
(715) 845-1333
444 S. Adams, Suite 6
Green Bay, WI 54301
(414) 435-2488

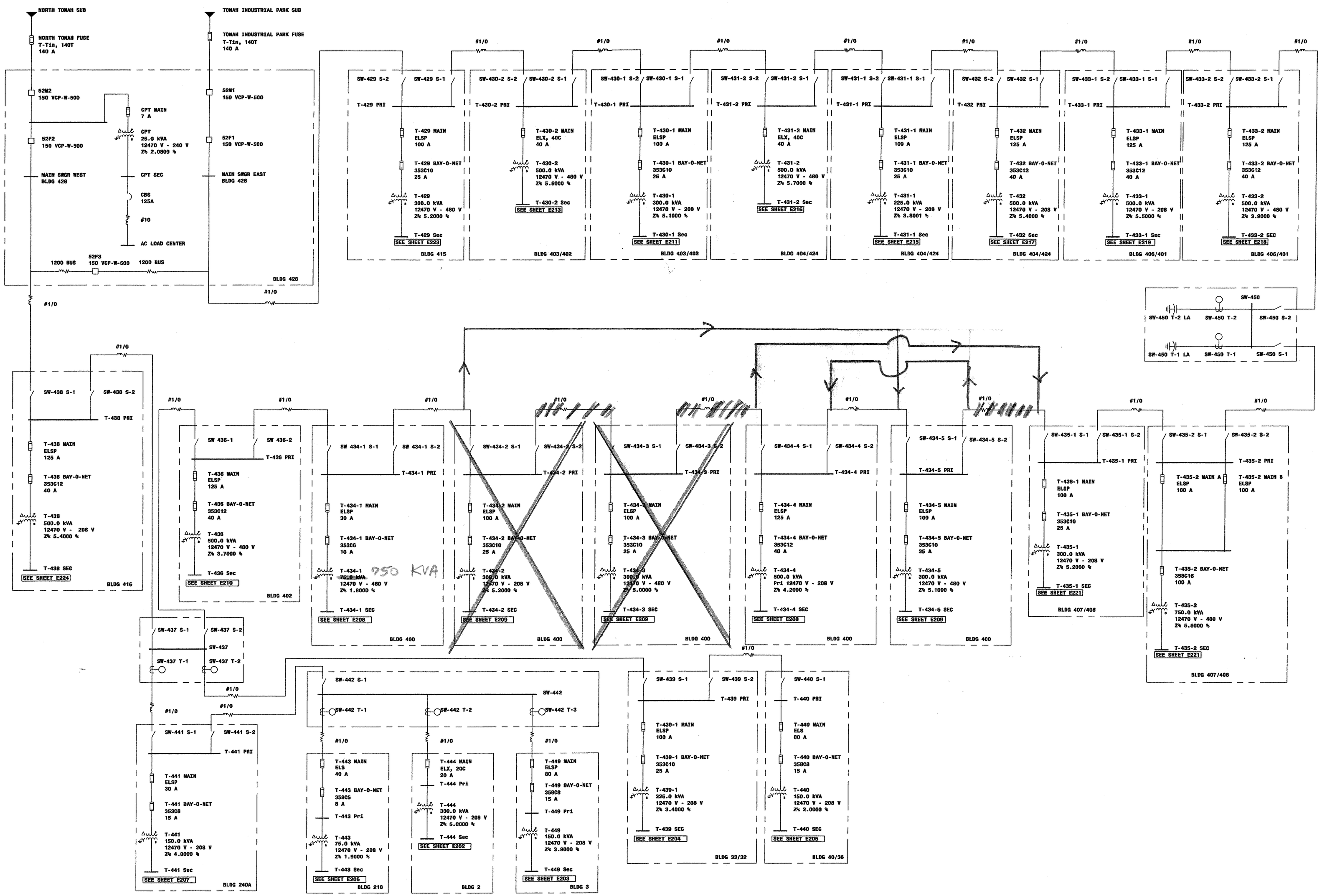

Department of Veteran Affairs

Office of Facilities

Date	12-22-2006
Project No.	V69DP-5745
DRAWING NO.	E201
Dwg. 2	Of 46
Project Title	ARC FLASH STUDY
Drawn	PCP
Checked	TGF
Building Number	
Location	TOMAH, WISCONSIN
Drawing Title	MEDIUM VOLTAGE ELECTRICAL ONE LINE DIAGRAM
Approved: Division Chief	
Approved: Service Director	

Revisions

Date

05022-00-BD-E201.dwg, "Layout1" PLOTTED AT 10:23:06 AM ON 03-13-2007 BY Bhamlin

SHEET INDEX

SHEET	CONTENTS
E001	COVER SHEET - MEDIUM VOLTAGE ELECTRICAL ONE-LINE SYMBOLS - AND INDEX
E201	MEDIUM VOLTAGE ELECTRICAL ONE-LINE DIAGRAM
E202	BUILDING 2 ELECTRICAL ONE-LINE DIAGRAM
E203	BUILDING 3 ELECTRICAL ONE-LINE DIAGRAM
E204	BUILDING 33/32 ELECTRICAL ONE-LINE DIAGRAM
E205	BUILDING 40/36 ELECTRICAL ONE-LINE DIAGRAM
E206	BUILDING 210 ELECTRICAL ONE-LINE DIAGRAM
E207	BUILDING 240A ELECTRICAL ONE-LINE DIAGRAM
E208	BUILDING 400 ELECTRICAL ONE-LINE DIAGRAM
E209	BUILDING 400 ELECTRICAL ONE-LINE DIAGRAM
E210	BUILDING 402 ELECTRICAL ONE-LINE DIAGRAM
E211	BUILDING 403/402 ELECTRICAL ONE-LINE DIAGRAM
E212	BUILDING 403/402 ELECTRICAL ONE-LINE DIAGRAM
E213	BUILDING 403/402 ELECTRICAL ONE-LINE DIAGRAM
E214	BUILDING 403/402 ELECTRICAL ONE-LINE DIAGRAM
E215	BUILDING 404/424 ELECTRICAL ONE-LINE DIAGRAM
E216	BUILDING 404/424 ELECTRICAL ONE-LINE DIAGRAM
E217	BUILDING 404/424 ELECTRICAL ONE-LINE DIAGRAM
E218	BUILDING 406/401 ELECTRICAL ONE-LINE DIAGRAM
E219	BUILDING 406/401 ELECTRICAL ONE-LINE DIAGRAM
E220	BUILDING 406/401 ELECTRICAL ONE-LINE DIAGRAM
E221	BUILDING 407/408 ELECTRICAL ONE-LINE DIAGRAM
E222	BUILDING 407/408 ELECTRICAL ONE-LINE DIAGRAM
E223	BUILDING 415 ELECTRICAL ONE-LINE DIAGRAM
E224	BUILDING 416 ELECTRICAL ONE-LINE DIAGRAM
E301	BUILDING 400 FIRST AND SECOND FLOOR PLAN - ELECTRICAL
E302	BUILDING 400 THIRD AND FOURTH FLOOR PLAN - ELECTRICAL
E303	BUILDING 401 FIRST AND SECOND FLOOR PLAN - ELECTRICAL
E304	BUILDING 401 THIRD FLOOR PLAN - ELECTRICAL
E305	BUILDING 402 FIRST AND SECOND FLOOR PLAN - ELECTRICAL
E306	BUILDING 402 THIRD FLOOR PLAN - ELECTRICAL
E307	BUILDING 403 FIRST AND SECOND FLOOR PLAN - ELECTRICAL
E308	BUILDING 403 THIRD FLOOR PLAN - ELECTRICAL
E309	BUILDING 404 FIRST AND SECOND FLOOR PLAN - ELECTRICAL
E310	BUILDING 404 THIRD FLOOR PLAN - ELECTRICAL
E311	BUILDING 406 FIRST AND SECOND FLOOR PLAN - ELECTRICAL
E312	BUILDING 406 THIRD FLOOR PLAN - ELECTRICAL
E313	BUILDING 407 FIRST AND SECOND FLOOR PLAN - ELECTRICAL
E314	BUILDING 407 THIRD FLOOR PLAN - ELECTRICAL
E315	BUILDING 408 FIRST AND SECOND FLOOR PLAN - ELECTRICAL
E316	BUILDING 408 THIRD FLOOR PLAN - ELECTRICAL
E317	BUILDINGS 2, 15, AND 25 FLOOR PLANS - ELECTRICAL
E318	BUILDING 23 FLOOR PLAN - ELECTRICAL
E319	BUILDINGS 32, 36, 40, 70, 295, 296, AND 390 FLOOR PLANS - ELECTRICAL
E320	BUILDINGS 424 AND 452 FLOOR PLANS - ELECTRICAL
E321	BUILDINGS 415, 416, 425, AND 450 FLOOR PLANS - ELECTRICAL

ONE LINE DIAGRAM

SYMBOL	DESCRIPTION	SYMBOL	DESCRIPTION	SYMBOL	DESCRIPTION
	2-WINDING TRANSFORMER		GENERATOR		RELAY
	3-WINDING TRANSFORMER		HIGH VOLTAGE BREAKER		RESISTOR
	AC BUS		HIGH PASS FILTER		SINGLE TUNED FILTER
E N	AUTO-TRANSFER SWITCH		INDUCTION MOTOR		SWITCH
	BATTERY		INVERTER		SYNCHRONOUS MOTOR
	CABLE		LOW VOLTAGE BREAKER/MCP		TRAIN
	CAPACITOR BANK		METER		TRANSMISSION LINE
	DC BUS		MOTOR OVERLOAD		TWO-NODE ANNOTATION
	DC CABLE		NON-MOTOR LOAD		UTILITY FUSE
	DC CAPACITOR		ONE-NODE ANNOTATION		
	DC-DC CONVERTER		PANEL SCHEDULE FUSE		
	DC GENERATOR		PI EQUIVALENT		
	DC MOTOR		REACTOR		
	DC NON-MOTOR LOAD		RECLOSER		
XXX A	FUSE		RECTIFIER		

Department of Veteran Affairs

Office of Facilities

Date 12-22-2006

Project No. V69DP-5745

DRAWING NO. E001

Dwg.1 Of 46

Project Title: ARC FLASH STUDY

Drawn: PCP

Checked: TGF

Building Number

Location: TOMAH, WISCONSIN

Drawing Title: COVER SHEET SYMBOLS LIST AND INDEX

Approved: Division Chief

Approved: Service Director

Revisions

Date

05022-00-SD-E001.dwg, "Layout1" PLOTTED AT 3:33:29 PM ON 02-21-2007 BY bhamlin