Exam, OB/GYN/Bariatric Floor Plan	EXRG8	1B4321
DRAWING TITLE	SPACE TYPE	ROOM NUMBER
AMBULATORY CARE - MED SURGICAL SPECIALTY CLINIC (262)	603-320	23NOV15
DEPARTMENT NAME	PROJECT NUMBER	DATE
		1/4" = 1'-0"
		SCALE

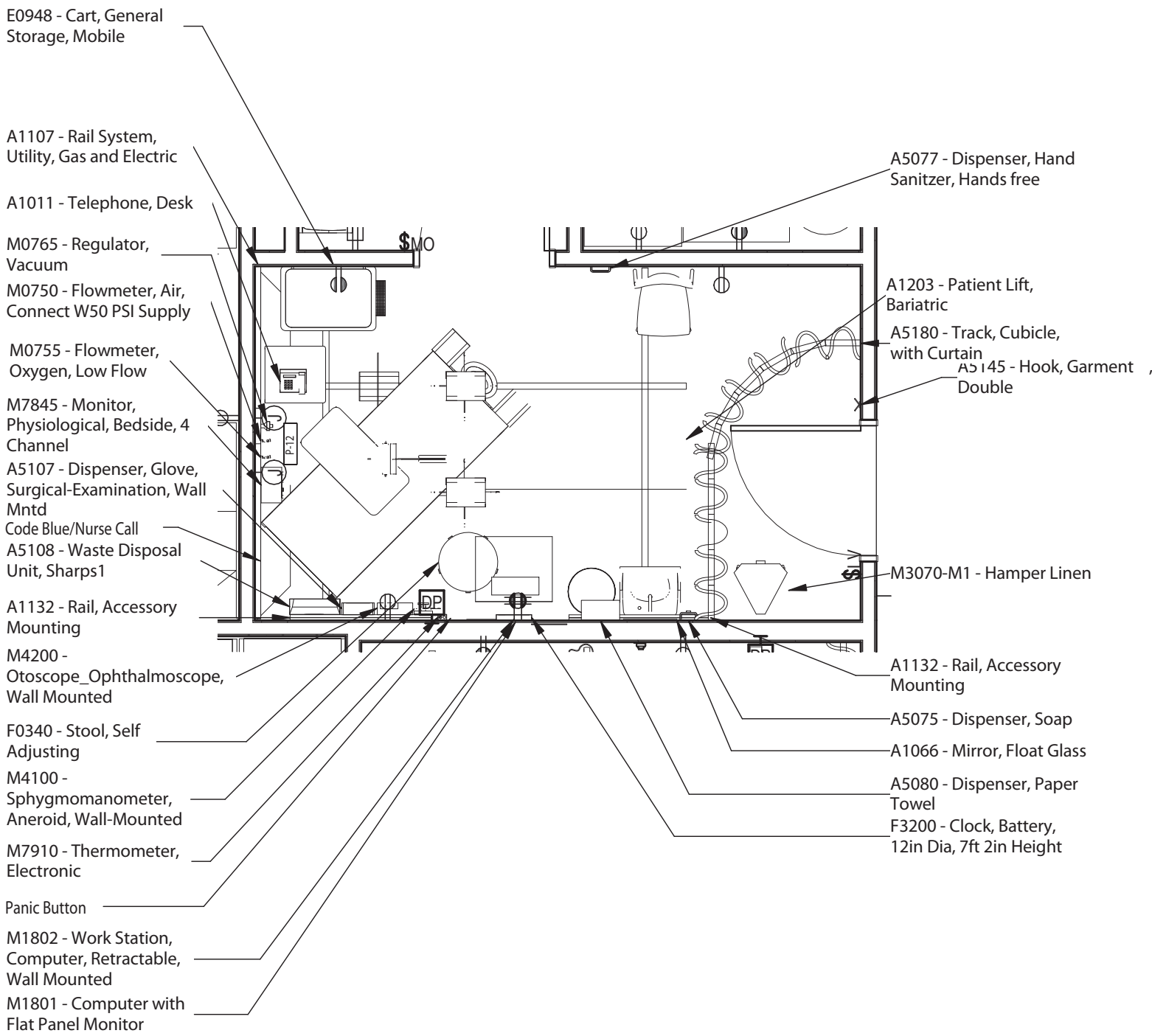

[** Note: This is an example of the Room Data Sheet submission.]

Exam, OB/GYN/Bariatric RCP	EXRG8	1B4321
DRAWING TITLE	SPACE TYPE	ROOM NUMBER
AMBULATORY CARE - MED SURGICAL SPECIALTY CLINIC (262)	603-320	23NOV15
DEPARTMENT NAME	PROJECT NUMBER	DATE
		1/4" = 1'-0"
		SCALE

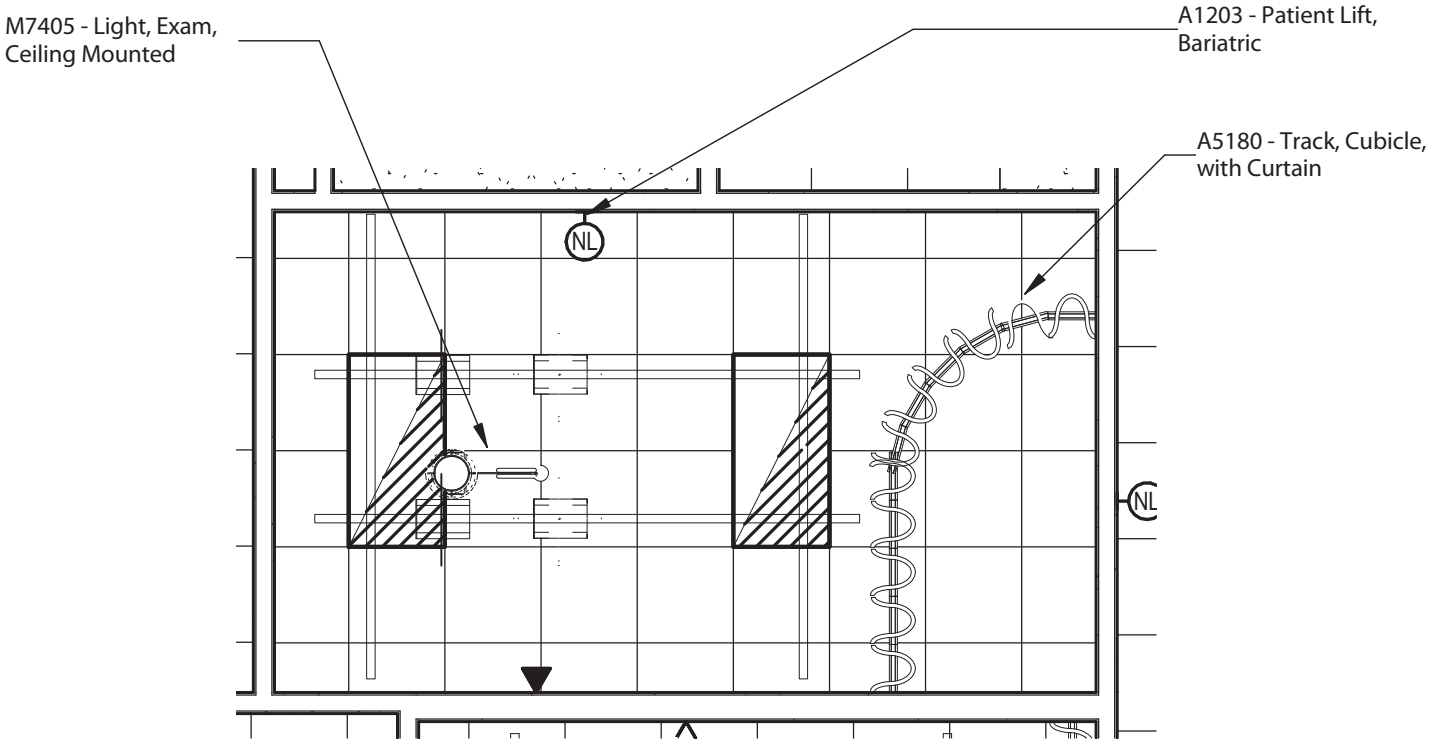

[** Note: This is an example of the Room Data Sheet submission.]

Exam, OB/GYN/Bariatric Elevations	EXRG8	1B4321
DRAWING TITLE	SPACE TYPE	ROOM NUMBER
AMBULATORY CARE - MED SURGICAL SPECIALTY CLINIC (262)	603-320	23NOV15
DEPARTMENT NAME	PROJECT NUMBER	DATE
		1/4" = 1'-0"
		SCALE

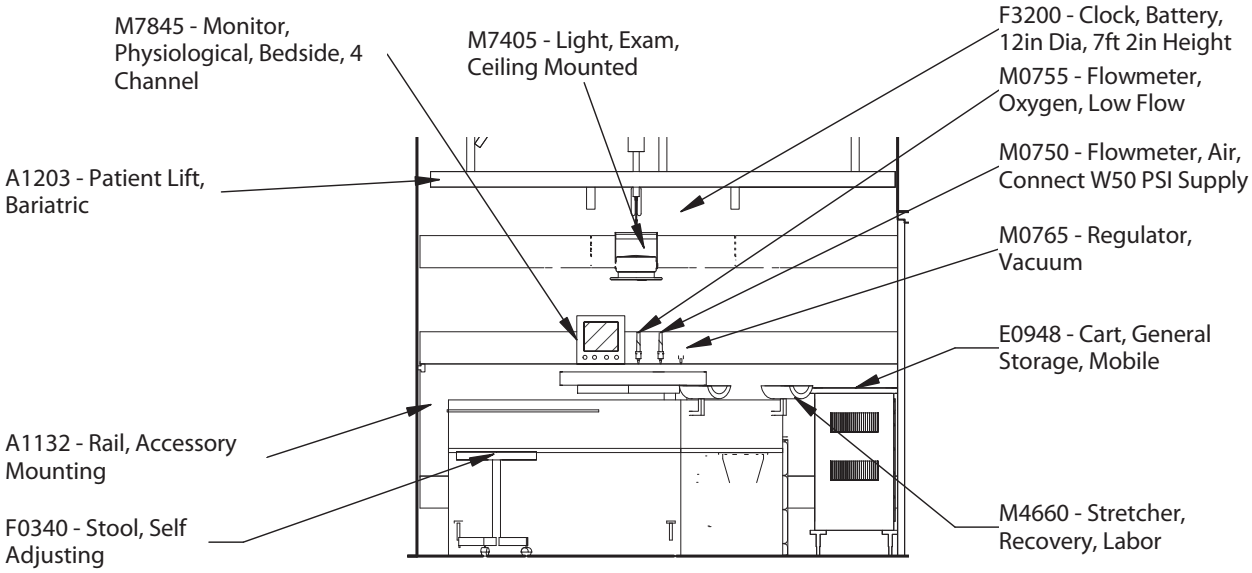

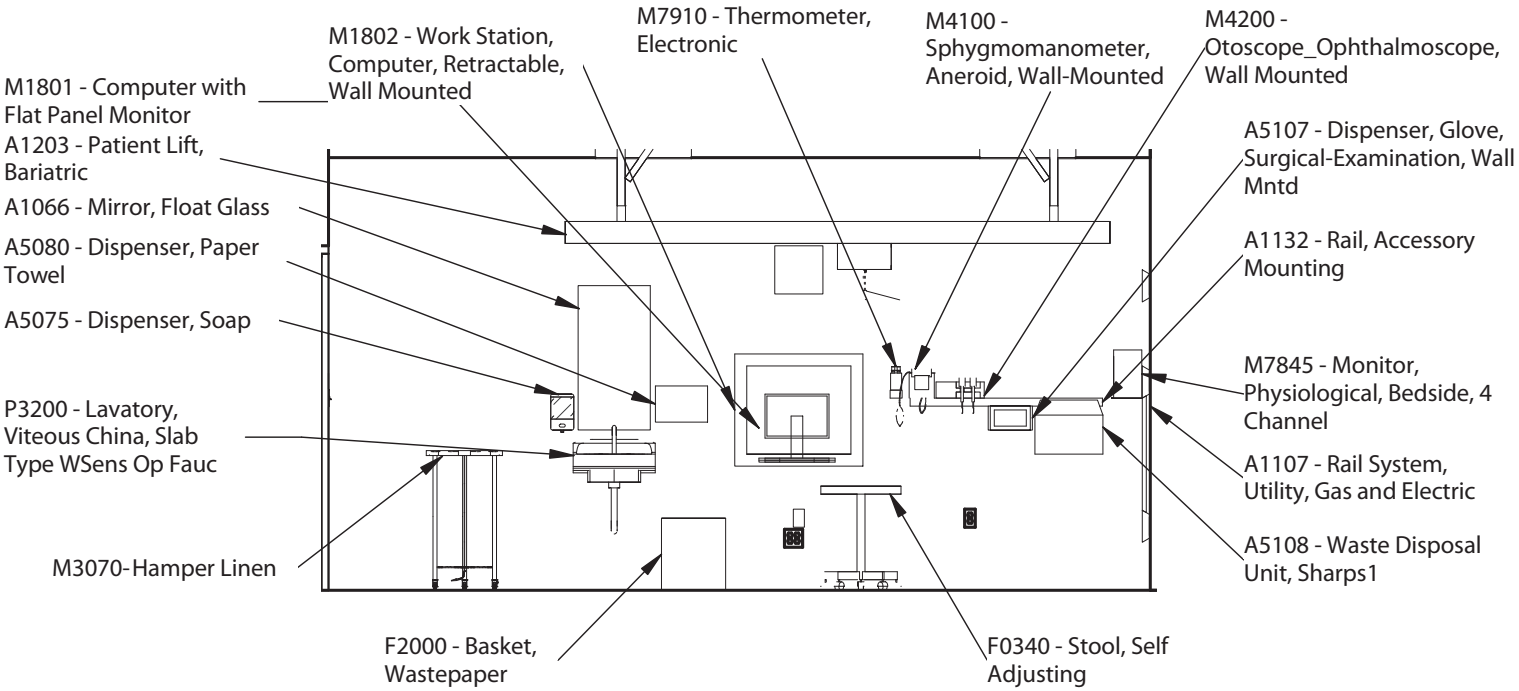

[** Note: This is an example of the Room Data Sheet submission.]

Planning Information

Program Space Name:	Exam Room, GYN	Program Space Type:	EXRG8
Department:	AMBULATORY CARE - HOSPITAL BASED (262)	Program Space Area (NSF):	140 SF
		Room Occupancy:	2, per HVAC loads

Architectural Requirements

Ceiling Material:	GWB Lay-in Panels
Ceiling Height:	9'-0"
Wall Finish:	
Wainscot:	48"; CT in Toilet Room
Base:	RB; CT in Toilet Room
Floor Finish:	LVT; CT in Toilet Room
Slab Depression:	--
Sound Protection:	STC 40
Minimum Door Size:	3'-6"
Minimum Door Height:	7'-0"
Hardware:	--
Door Notes:	--
Windows:	--
Notes:	--

Communication/Special Systems

Data:	Yes
Telephone:	Yes
ADP:	--
Intercom	--
Patient Monitor:	Yes
Nurse Call:	Yes
Panic Call:	--
Battery Operated Clock:	Yes
Public Address:	--
Radio/Entertainment:	--
MATV:	--
CCTV:	--
MID:	--
Security/Duress:	Yes
VTEL:	--
VA Satellite TV:	Yes
Notes:	Coordinate location and height of work station receptacles with modular furniture.

Special Equipment

Special Equipment:	--

Heating, Ventilating, and Air Conditioning

Inside Design Conditions:	Temperature: 70°F - 75°F Relative Humidity: 20% - 60%
Minimum Air Changes per Hour:	6 (Exam Room); 10 (Toilet Room)
100% Exhaust Air:	Yes (Toilet Only)
100% Outside Air:	No
Room Air Balance:	Neutral (Exam Room) ; Negative (Toilet Room)
Dedicated Exhaust System:	No
AC Load (Equipment):	As Required
AC Load (Light):	As Required
Occupancy:	2, per HVAC loads
Individual Temperature Control:	--
Room Pressure:	Neutral (Exam Room) ; Negative (Toilet Room)
Noise Criteria:	--
Notes:	

Lighting

General:	--
Special:	
Emergency Light:	As Shown
Night Lighting:	--
Lighting Level:	Per V.A. (Appendix A:) Illumination levels
Notes:	1. 2'x4' LED recessed fixtures. 2. Dimming capabilities standard for all fixtures

Plumbing and Medical Gases

Cold Water:	Yes
Hot Water:	Yes
Domestic Water (HWH):	--
Sanitary Drain:	Yes
Reagent Grade Water:	--
Medical Air:	#
Medical Vacuum:	#
Medical Oxygen:	#
Laboratory Air:	#
Laboratory Vacuum:	#
Laboratory Oxygen:	#
Laboratory CO2:	#
Misc. Gases:	#
Sprinkler:	--
Floor Drain:	--
Water Control:	--
Notes:	

Power

General:	As Shown
Special:	--
Emergency:	As Shown
Voltages:	--
Notes:	1. Junction box x-ray illuminator. Connect per equipment manufacture. 2. Recessed floor mounted junction box for exam and treatment table. 3. Portable exam light.

[** Note: This is an example of the Room Data Sheet submission.]

Exam, OB/GYN/Bariatric Equipment List

DRAWING TITLE

EXRG8

SPACE TYPE

1B4321

ROOM NUMBER

AMBULATORY CARE - MED SURGICAL SPECIALTY CLINIC (262)

DEPARTMENT NAME

603-320

PROJECT NUMBER

23NOV15

DATE

SCALE

JSN	NAME	QTY	ACQ/INS
A1011	A1011 - Telephone, Desk, 1 Line 12 x 12 12"x 12"	1	
A1107	A1107 - Rail System, Utility, Gas and Electric 120"x 2"	1	
A1132	A1132 - Rail, Accessory Mounting 48"x 2"	2	
A1203	A1203 - Patient Lift, Bariatric	1	
A5075	A5075 - Dispenser, Soap 6"x 3"	1	
A5077	A5077 - Dispenser, Hand Sanitzer, Hands free 7"x 3"	1	
A5080	A5080 - Dispenser, Paper Towel 13"x 7"	1	
A5107	A5107 - Dispenser, Glove, Surgical-Examination, Wall Mntd 10"x 4"	1	
A5108	A5108 - Waste Disposal Unit, Sharps 17"x 13"	1	VV
A5145	A5145 - Hook, Garment, Double 4"x 2"	1	CC
A5180	A5180 - Track, Cubicle, with Curtain 11"x 12"	11	VV
E0948	E0948 - Cart, General Storage, Mobile 42x32x22 35"x 22"	1	VV
F0340	F0340 - Stool, Self Adjusting 20"x 20"	1	VV
F2000	F2000 - Basket, Wastepaper 16"x 16"	1	VV
F3200	F3200 - Clock, Battery, 12in Dia 12"x 2", 7'-2" Height	2	
M0750	M0750 - Flowmeter, Air, Connect W50 PSI Supply 1"x 3"	1	
M0755	M0755 - Flowmeter, Oxygen, Low Flow 1"x 3"	1	
M0765	M0765 - Regulator, Vacuum 4"x 3"	1	
M1801	M1801 - Computer with Flat Panel Monitor	1	VV
M1802	M1802 - Work Station, Computer, Retractable, Wall Mounted 32"x 6"	1	
M3070	M3070-M1 - Hamper Linen	1	
M4100	M4100 - Sphygmomanometer, Aneroid, Wall-Mounted 10"x 4"	1	
M4200	M4200 - Otoscope_Ophthalmoscope, Wall Mounted 12"x 4"	1	
M4660	M4660 - Stretcher, Recovery, Labor 37"x 92"	1	VV
M7040	M7040 - Table, Overbed 18"x 36"	1	VV
M7405	M7405 - Light, Exam, Ceiling Mounted 13"x 31"	1	CC
M7845	M7845 - Monitor, Physiological, Bedside, 4 Channel 12"x 7"	1	VV
M7910	M7910 - Thermometer, Electronic 3"x 2"	1	VV

[** Note: This is an example of the Room Data Sheet submission.]

Exam, OB/GYN/Bariatric Axo	EXRG8	1B4321
DRAWING TITLE	SPACE TYPE	ROOM NUMBER
AMBULATORY CARE - MED SURGICAL SPECIALTY CLINIC (262)	603-320	23NOV15
DEPARTMENT NAME	PROJECT NUMBER	DATE
		SCALE

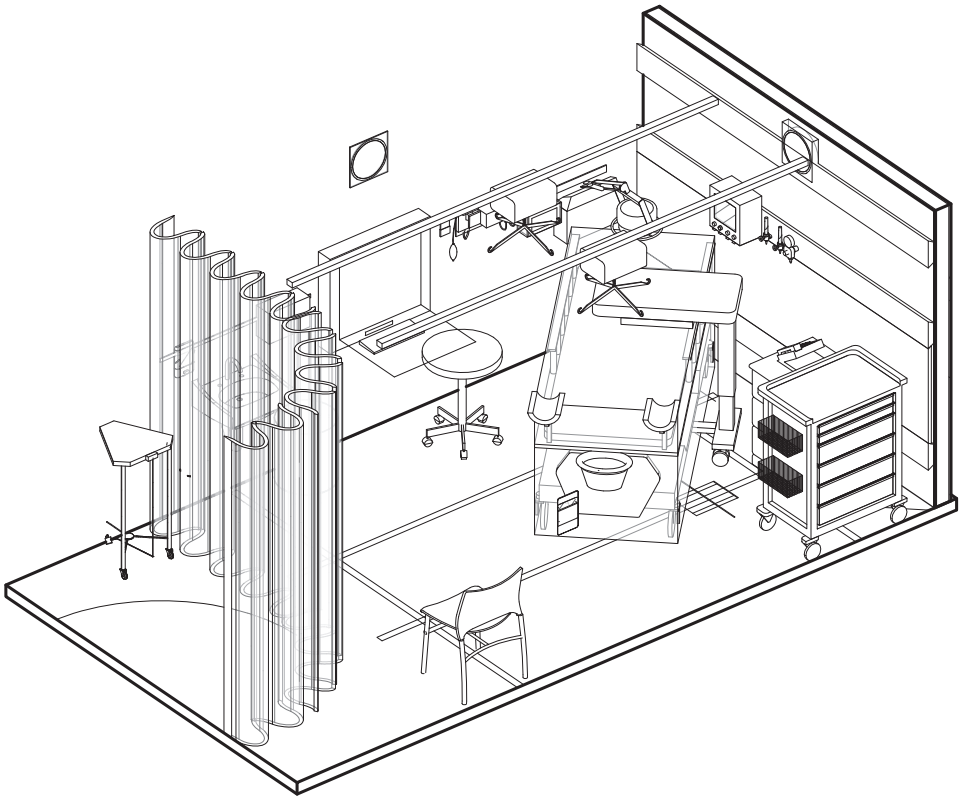

1 Team 4 - Exam Rm, OB/GYN/Bari

SCALE:

* Submit 3D pdf. model file instead of static axonometric drawing.

[** Note: This is an example of the Room Data Sheet submission.]