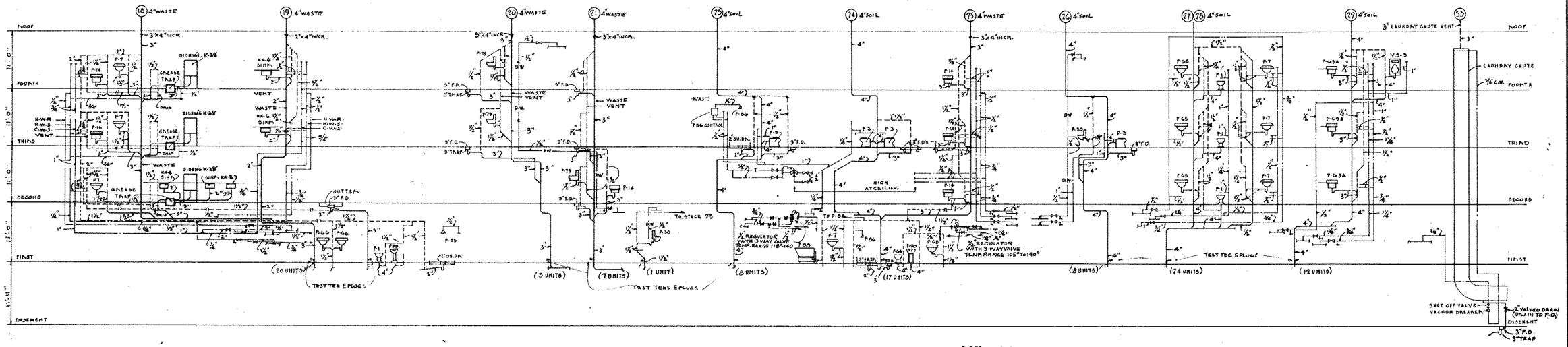

RISER DIAGRAM - SANITARY SYSTEM
NO SCALE

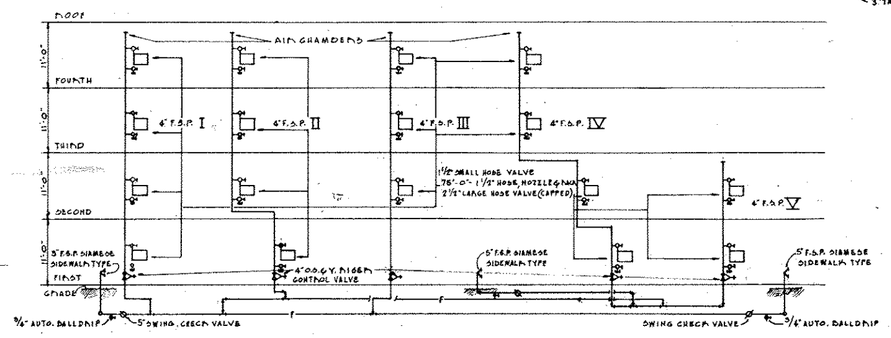

FIRE STANDPIPE - RISER DIAGRAM
NO SCALE

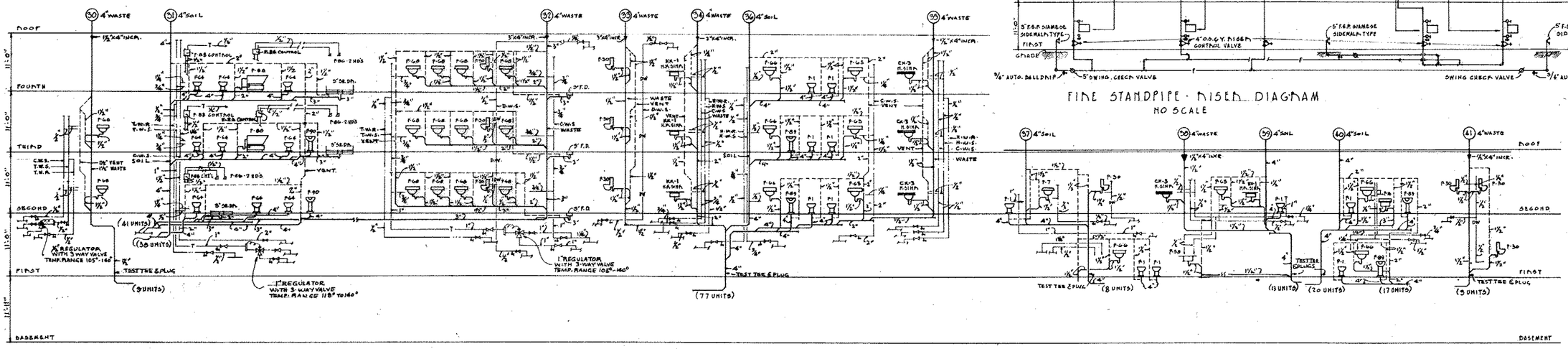

RISER DIAGRAM - SANITARY SYSTEM
NO SCALE

REVISION	DATE	DESCRIPTION	BY

PRACK & PRACK
ALFRED HOPKINS & ASSOCIATES
BOWERS & BARBALAT
ARCHITECTS - ENGINEERS

DEPARTMENT OF THE ARMY
CORPS OF ENGINEERS
PITTSBURGH DISTRICT
PITTSBURGH, PA.

DRAWN BY: W.C.K.
TRACED BY: W.C.K.
CHECKED BY:
SUBMITTED:
APPROVED: Signature
APPROVED: COL. C. E. DISTRICT ENGINEER
DATE:

VETERANS ADMINISTRATION HOSPITAL
PITTSBURGH, PA.
[redacted] BED N. P.
BUILDING 2 - ADMISSION & TREATMENT
RISER DIAGRAM

V.A. PROJECT NO. 2447

SCALE: AS NOTED
SPEC. NO.
DRAWING NUMBER
SHEET OF 32-14-P12