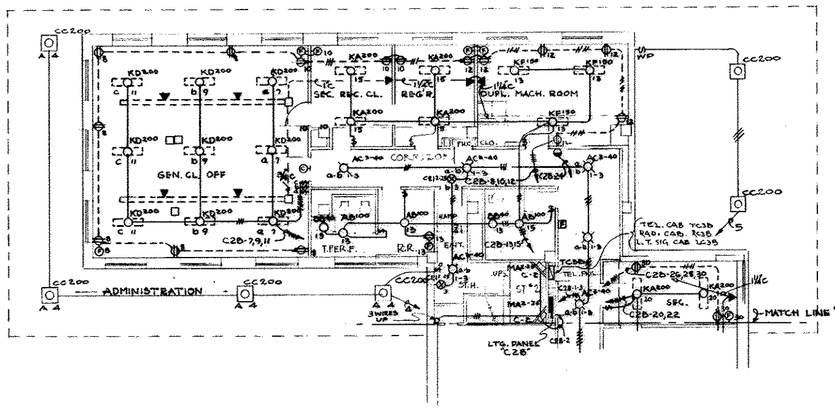

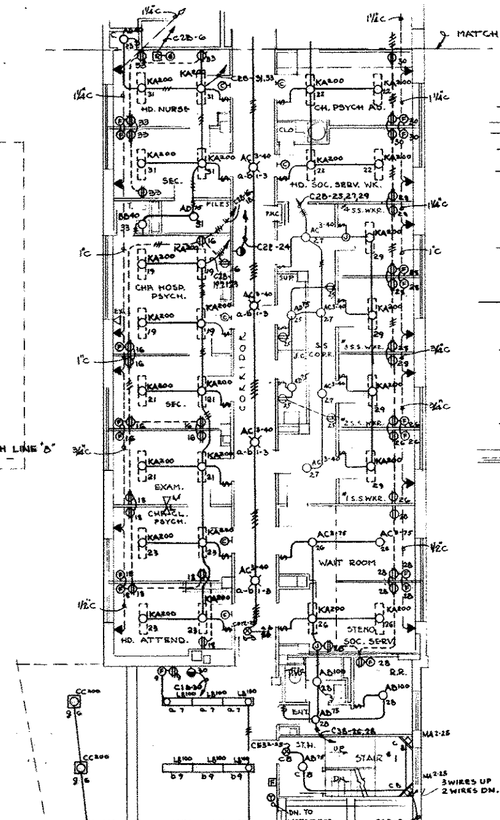

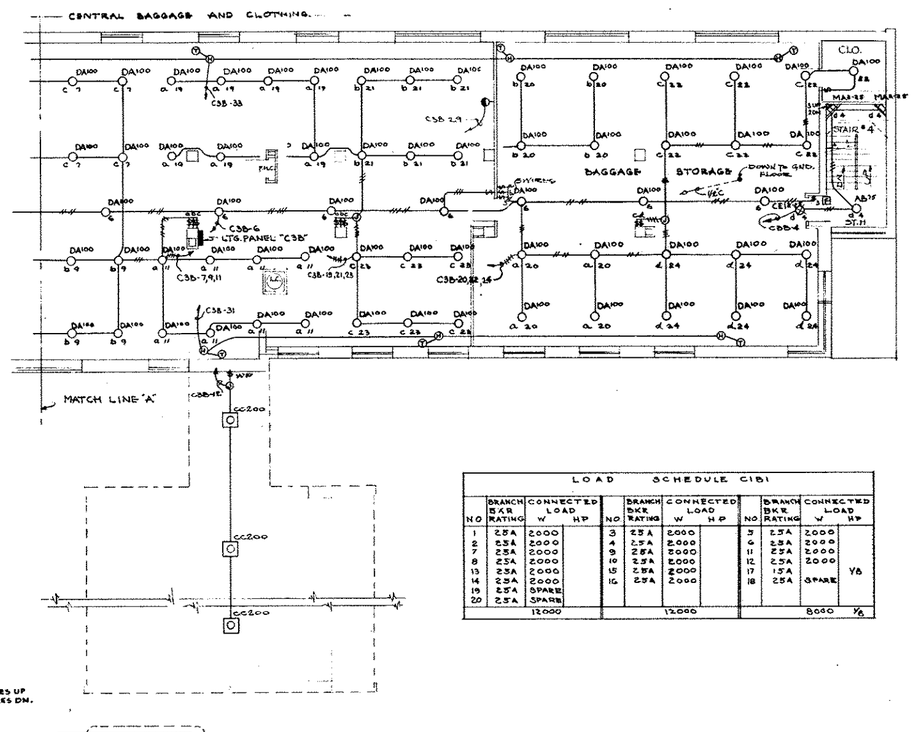

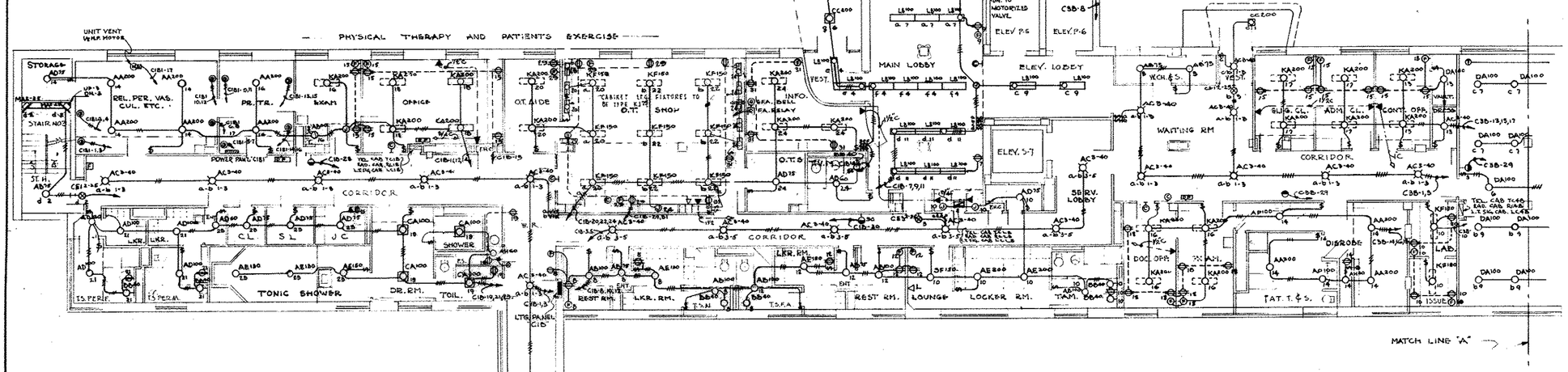

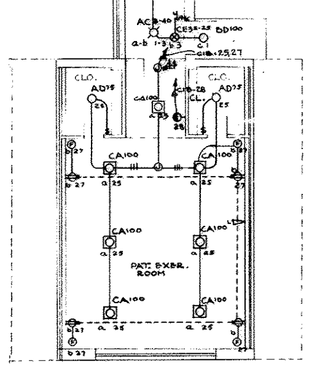

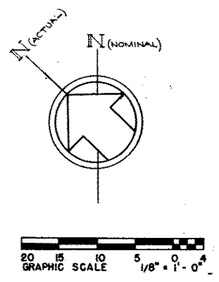

LOAD SCHEDULE C1B

A PHASE				B PHASE				C PHASE			
NO.	BRANCH BKR RATING	CONNECTED LOAD W	HP	NO.	BRANCH BKR RATING	CONNECTED LOAD W	HP	NO.	BRANCH BKR RATING	CONNECTED LOAD W	HP
1	15A	660		3	15A	620		5	15A	480	
2	15A	1125		4	15A	600		6	15A	600	
7	15A	700		9	15A	900		11	15A	600	
8	15A	100		10	15A	980		12	15A	925	
13	15A	130		15	15A	800		17	15A	SPARE	
14	15A	875		16	15A	740		18	15A	800	
19	15A	660		21	15A	700		23	15A	735	
20	15A	830		22	15A	900		24	15A	715	
25	15A	730		27	15A	800		29	15A	600	
26	15A	SPARE		28	25A	2000		30	25A	2000	
31	15A	1000		33	15A	SPARE		35	15A	SPARE	
32	15A	SPARE		34	25A	SPARE		36	15A	SPARE	
		6870				8940				7435	

LOAD SCHEDULE C2B

A PHASE				B PHASE				C PHASH			
NO	BRANCH BKR RATING	CONNECTED LOAD W	HP	NO	BRANCH BKR RATING	CONNECTED LOAD W	HP	NO	BRANCH BKR RATING	CONNECTED LOAD W	HP
1	15A	800		3	15A	530		5	15A	490	
2	15A	775		4	15A	800		6	15A	100	
7	15A	600		9	15A	600		11	15A	600	
8	15A	700		10	15A	530		12	15A	800	
13	15A	930		15	15A	900		17	15A	SPARE	
14	15A	SPARE		16	15A	1000		18	15A	800	
19	15A	800		21	15A	800		23	15A	800	
20	15A	400		22	15A	800		24	25A	2000	
25	15A	530		27	15A	480		29	15A	800	
26	15A	300		28	15A	800		30	15A	800	
31	15A	875		33	15A	800		35	15A	SPARE	
32	15A	SPARE		34	15A	SPARE		36	25A	SPARE	
		6930				8030				7100	

LOAD SCHEDULE C1B1

NO	BRANCH BKR RATING	CONNECTED LOAD W	HP	NO	BRANCH BKR RATING	CONNECTED LOAD W	HP	NO	BRANCH BKR RATING	CONNECTED LOAD W	HP
1	25A	2000		3	25A	2000		5	25A	2000	
2	25A	2000		4	25A	2000		6	25A	2000	
7	25A	2000		9	25A	2000		11	25A	2000	
8	25A	2000		10	25A	2000		12	25A	2000	Y6
13	25A	2000		15	25A	2000		17	15A		
14	25A	2000		16	25A	2000		18	25A	SPARE	
19	25A	SPARE									
20	25A	SPARE									
		12000				12000				8000	Y6

LOAD SCHEDULE C3B

NO	BRANCH BKR. RATING	CONNECTED LOAD W	HP	NO	BRANCH BKR. RATING	CONNECTED LOAD W	HP	NO	BRANCH BKR RATING	CONNECTED LOAD W	HP
1	15A	700		3	15A	480		5	15A	SPARE	
2	15A	SPARE		4	15A	1075		6	15A	SPARE	
7	15A	800		9	15A	800		11	15A	800	
8	15A	1025		10	15A	900		12	15A	400	
13	15A	920		15	15A	900		17	15A	330	
14	15A	940		16	15A	800		18	15A	800	
19	15A	800		21	15A	600		23	15A	600	
20	15A	600		22	15A	700		24	15A	600	
25	15A	SPARE		27	15A	SPARE		29	25A	2000	
26	15A	700		28	15A	875		30	15A	SPARE	
31	15A		1/10	33	15A		1/30				
32	15A	SPARE		34	25A	SPARE					
		6445	1/10			7130	1/30			6330	

REVISION	DATE	DESCRIPTION	BY

PRACK & PRACK
ALFRED HOPKINS & ASSOCIATES
BOWERS & BARBALAT
ARCHITECTS - ENGINEERS

DEPARTMENT OF THE ARMY
CORPS OF ENGINEERS
PITTSBURGH DISTRICT
PITTSBURGH, PA.

DRAWN BY: BP
TRACED BY: HSW
CHECKED BY: F.T.W.
SUBMITTED:
APPROVED: ENGINEER
APPROVED: COL. C. DISTRICT ENGINEER
DATE: 6-1-49

VETERANS ADMINISTRATION HOSPITAL
PITTSBURGH, PA.
1000 BED N. P.
BLD'G. 2-ADMISSION & TREATMENT
FIRST FLOOR PLAN

V.A. PROJECT NO. 2447

SCALE 1/4" = 1'-0"
SPEC. NO.
DRAWING NUMBER
SHEET OF 32-14-E2