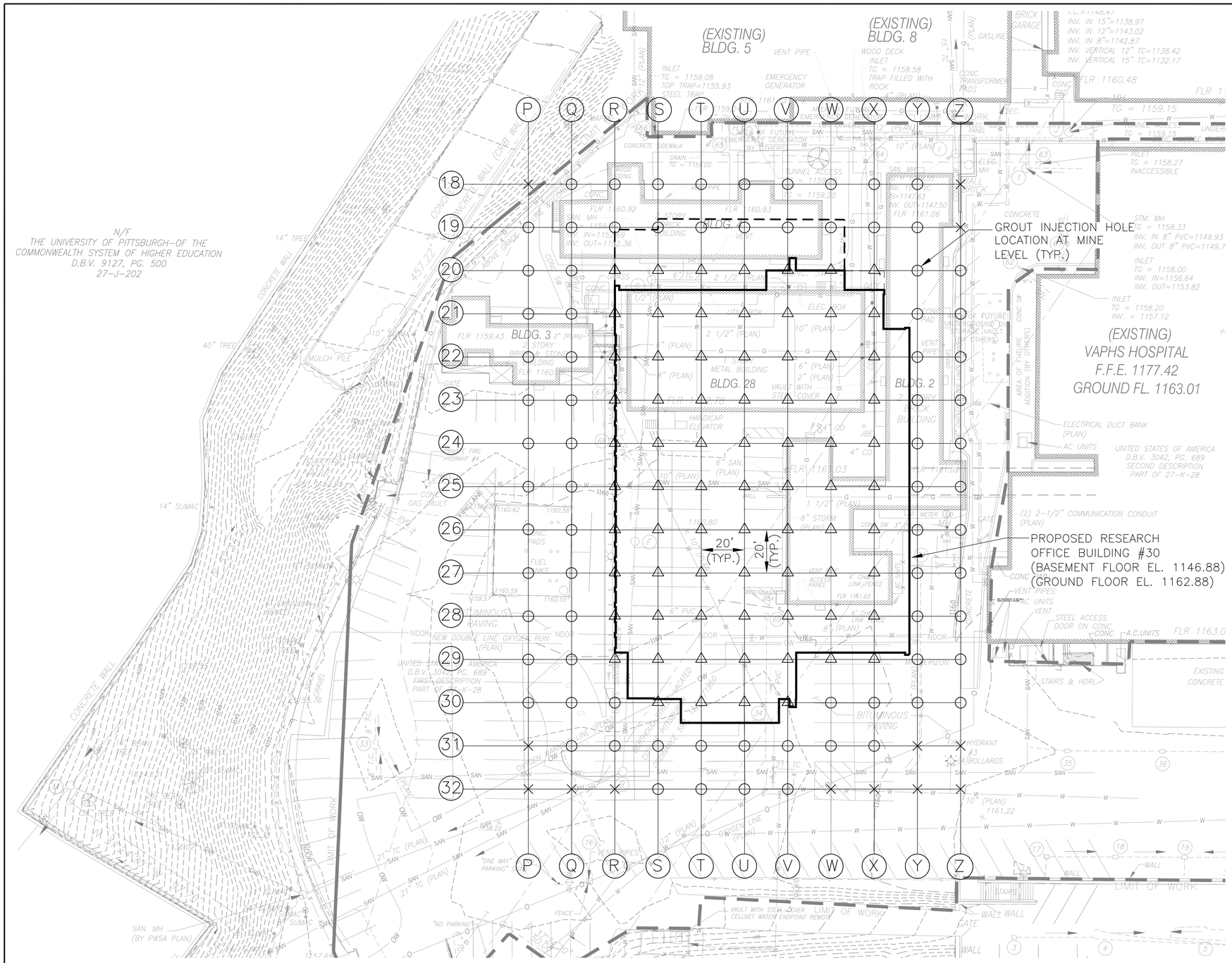

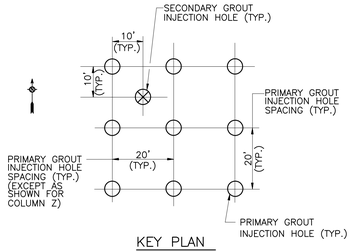

KEY PLAN
(TYPICAL GROUT INJECTION HOLE PATTERN)
N.T.S.

NOTES:

1. GROUT HOLE LOCATIONS ARE SHOWN WHERE THEY INTERCEPT THE BASE OF COAL AT APPROXIMATE ELEVATION 1060 FEET. THE GROUND SURFACE LOCATIONS OF GROUT HOLES MAY DIFFER FROM THE MINE LEVEL LOCATIONS WHERE INCLINED HOLES ARE REQUIRED TO AVOID OBSTRUCTIONS, FIRE LANES, OR SIMILAR. THE GROUND SURFACE LOCATIONS ARE TO BE FIELD DETERMINED.
2. SEE PROJECT GROUTING SPECIFICATIONS AND LEGEND FOR SEQUENCE OF DRILLING AND GROUTING.
3. USE THIS DRAWING ONLY FOR THE GROUTING PROGRAM. REFER TO OTHER DRAWINGS FOR OTHER DETAILS.
4. THE LOCATIONS OF ALL UTILITIES ARE APPROXIMATE AND MUST BE VERIFIED BEFORE EXCAVATING OR DRILLING.

LEGEND:

PRIMARY GROUT INJECTION HOLES:

- ○ — BARRIER HOLE
- △ — INTERIOR HOLE
- × — LOCATION NOT USED

SECONDARY GROUT INJECTION HOLES:

- ⊗ — LOCATIONS TO BE DETERMINED DURING PRIMARY GROUT INJECTION PROGRAM

THIS DRAWING WAS DEVELOPED FROM DRAWING b-CSI-000 RECEIVED FROM ASTORINO. INFORMATION PERTAINING TO MINE GROUTING WORK AT THE RESEARCH OFFICE BUILDING (ROB) WAS DEVELOPED BY GAI CONSULTANTS, INC.

NOTE: THE UTILITY LOCATIONS SHOWN ON THIS PLAN ARE APPROX. LOCATIONS ONLY AS PER UTILITY COMPANY INFORMATION AND INFORMATION SUPPLIED BY THE PA ONE CALL SYSTEM.

SERIAL #
Design:

*BEFORE YOU DIG ANYWHERE IN PENNSYLVANIA STOP! CALL PA. ONE-CALL AT 1-800-242-1776 TOLL FREE FOR ACTUAL FIELD UTILITY LOCATIONS.

PENNSYLVANIA ACT 38 (1991) REQUIRES NO LESS THAN 3 WORKING DAYS NOTICE NOR MORE THAN 10 WORKING DAYS NOTICE FROM EXCAVATORS WHO ARE ABOUT TO DIG, DRILL, BLAST, AUGER, BORE, GRADE, TRENCH, OR DEMOLISH WHEN IN THE CONSTRUCTION PHASE. A DESIGNER IS REQUIRED TO GIVE NO LESS THAN 10 WORKING DAYS NOR MORE THAN 90 WORKING DAYS NOTICE WHEN ENGAGED IN THE DESIGN PHASE. BOTH OF THESE CONDITIONS INVOLVE THE ENTIRE COMMONWEALTH.

BLDG NORTH

20 10 0 20 40
SCALE: 1" = 20'

Revisions:	Date

CONSULTANTS:

HDR Architecture, Inc.
1101 King Street | Suite 400 | Alexandria, Virginia 22314-2944 | 703.518.8500

gai consultants

ARCHITECT/ENGINEERS:

Drawing Title: **MINE GROUTING RESEARCH OFFICE BUILDING**

Approved: Project Director

Project Title: **VA CARES CONSOLIDATION VAMC, PITTSBURGH, PA RESEARCH OFFICE BLDG.**

Location: **VAPHS UNIVERSITY DRIVE**

Date	Checked	Drawn
08-18-10	RWB	BRB

Project Number: **646CA2500R**
Building Number: **30**
Drawing Number: **CM1-100**
Dwg. -- of --

Office of Facilities Management

Department of Veterans Affairs

VA FORM 08-6231, OCT 1978

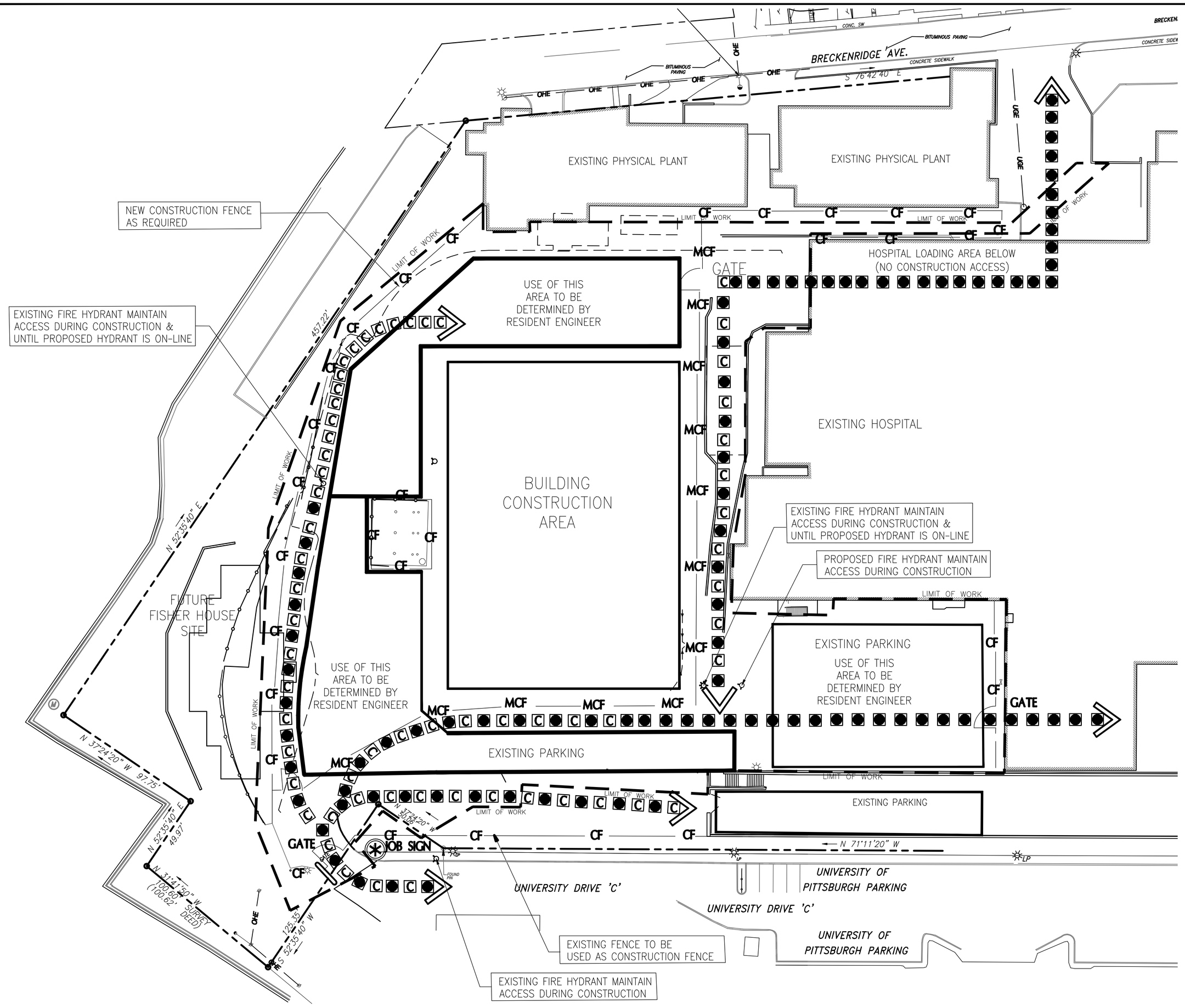

1 Site Sequential Phasing Plan

SCALE: 1" = 30'

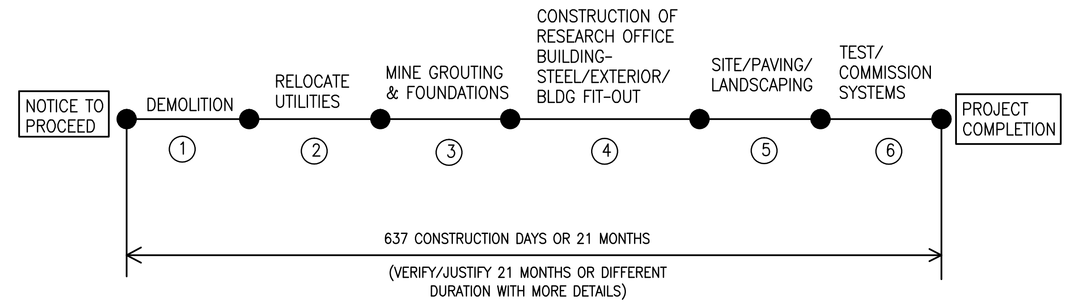

Sample CPM-1 Diagram

Site Sequential Phasing Notes

1. SEQUENCE 1 - INSTALL EROSION & SEDIMENTATION CONTROLS, INSTALL CONSTRUCTION FENCE. DEMOLISH EXISTING BUILDINGS. STAGE RE AND CONTRACTOR TRAILERS.
2. SEQUENCE 2 - RELOCATE UTILITIES.
3. SEQUENCE 3 - MINE GROUTING AND CONSTRUCTION OF BUILDING FOUNDATIONS.
4. SEQUENCE 4 - RESERCH OFFICE BUILDING CONSTRUCTION.
5. SEQUENCE 5 - SITE WORK, PAVING, AND LANDSCAPING.
6. SEQUENCE 6 - TEST/COMMISSION SYSTEMS
7. MAINTAIN FIRE APPARATUS ACCESS TO THE SITE AND TO EXISTING & PROPOSED FIRE HYDRANTS DURING CONSTRUCTION
8. CONTRACTOR TO COORDINATE WITH RESIDENT ENGINEER ON DEVELOPMENT OF A FINAL STAGING PLAN THAT IS WORKABLE FOR THE VAPHS AND THE CONTRACTOR, AND THAT ACCOMMODATES OTHER ONGOING CONSTRUCTION PROJECTS IN AND AROUND THE PROJECT SITE. CONTRCTOR SHALL SUBMIT DTAILED CPM SCHEDULE PER NAS SPECIFICATION FOR VA APPROVAL.

Site Sequential Phasing Plan Legend

- VA HOSPITAL TRAFFIC. MAINTAIN DAILY ACCESS. COORDINATE WITH VA
- CONSTRUCTION TRAFFIC
- SHARED CONSTRUCTION, FIRE TRUCK, & VA TRAFFIC
- CONSTRUCTION SIGN
- —CF— CF— CONSTRUCTION FENCE
- —MCF—MCF— MOVABLE CONSTRUCTION FENCE

BLDG NORTH

30 15 0 30 60
SCALE: 1" = 30'

FOR CONSTRUCTION
FULLY SPRINKLERED

Revisions:	Date

CONSULTANTS:

HDR

HDR Architect-eg, Inc.

1101 King Street | Suite 400 | Alexandria, Virginia 22314-2944 | 703.518.8600

ARCHITECT/ENGINEERS:

ARCHITECTURE ENGINEERING INTERIOR DESIGN DESIGN/BUILD

ASTORINO

227 Fort Pitt Boulevard Pittsburgh Pennsylvania 15222
TEL 412 765 1700 FAX 412 765 1711 www.astorino.com

Drawing Title: **Site Sequential Phasing Plan**

Approved: Project Director

Project Title: **VA GAERS CONSOLIDATION VAMC, PITTSBURGH, PA RESEARCH OFFICE BLDG.**

Location: **VAPHS UNIVERSITY DRIVE**

Project Number: **04664A6668**

Building Number: **00**

Drawing Number: **CS0-000** Dwg. – of –

Date	Checked	Drawn
08-18-2010	MED	MED

Office of Facilities Management

Department of Veterans Affairs

VA FORM 08-6231, OCT 1978

P:\Project\2005425.00\CAD\UNIVERSITY DRIVE\Research Office Building\Site\CS0-000.dwg MDAMICO 08/16/10 ; 10:07:38

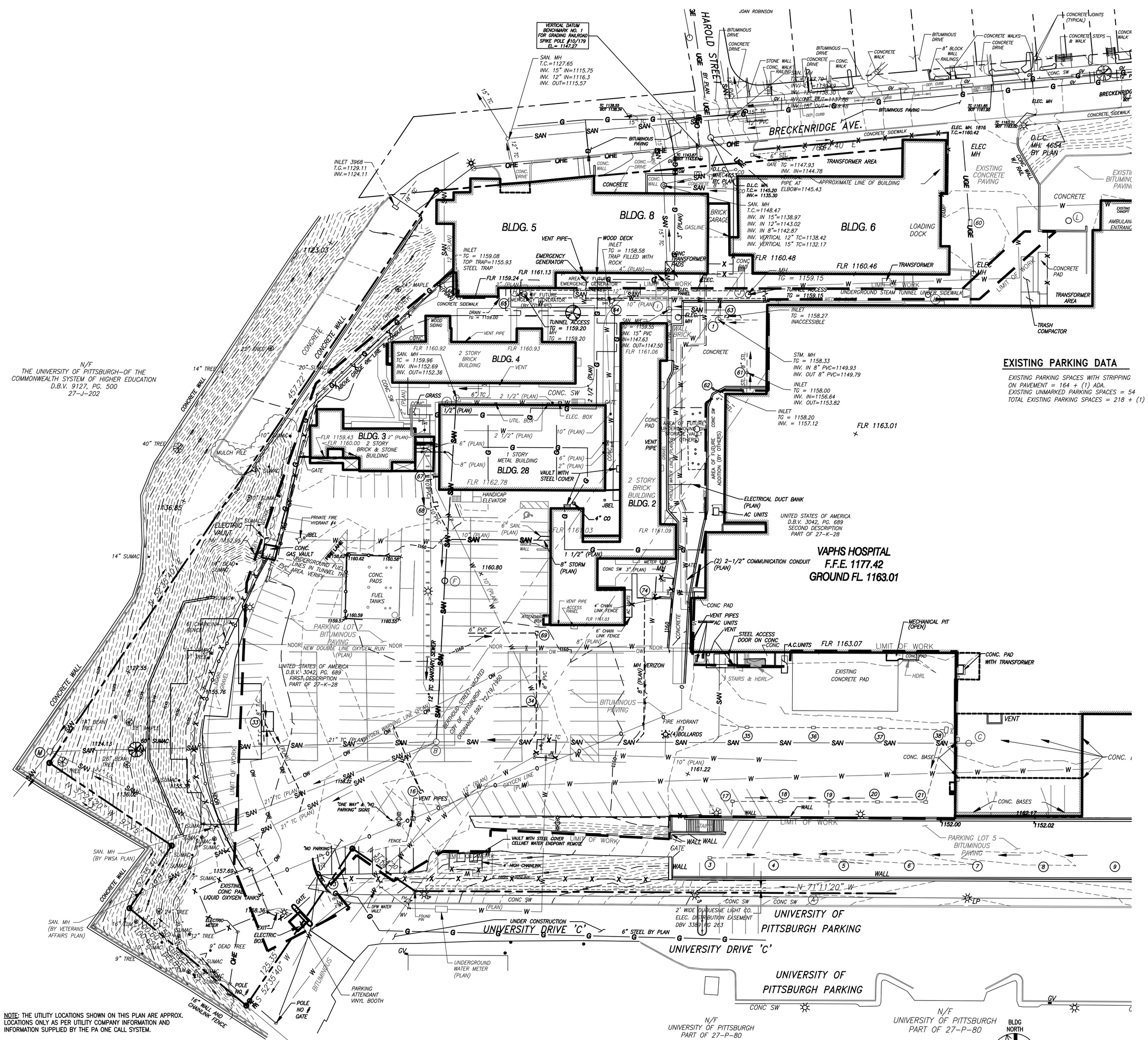

NOTE: THE UTILITY LOCATIONS SHOWN ON THIS PLAN ARE APPROX. LOCATIONS ONLY AS PER UTILITY COMPANY INFORMATION AND INFORMATION SUPPLIED BY THE PA ONE CALL SYSTEM.

SERIAL # 20102280550

Design:

*BEFORE YOU DIG ANYWHERE IN PENNSYLVANIA STOP! CALL PA. ONE-CALL AT 1-800-242-1776 TOLL FREE FOR ACTUAL FIELD UTILITY LOCATIONS.

PENNSYLVANIA ACT 38 (1991) REQUIRES NO LESS THAN 3 WORKING DAYS NOTICE NOR MORE THAN 10 WORKING DAYS NOTICE FROM EXCAVATORS WHO ARE ABOUT TO DIG, DRILL, BLAST, AUGER, BORE, GRADE, TRENCH, OR DEMOLISH WHEN IN THE CONSTRUCTION PHASE. A DESIGNER IS REQUIRED TO GIVE NO LESS THAN 10 WORKING DAYS NOR MORE THAN 90 WORKING DAYS NOTICE WHEN ENGAGED IN THE DESIGN PHASE. BOTH OF THESE CONDITIONS INVOLVE THE ENTIRE COMMONWEALTH.

1 Site Existing Conditions Plan

SCALE: 1" = 30'

Site Existing Conditions General Notes

1. THIS EXISTING CONDITIONS PLAN SHOWING ABOVE AND BELOW GROUND UTILITIES, AND THE BASE INFORMATION USED TO PREPARE THESE CONSTRUCTION DRAWINGS ARE BASED ON AN AS-BUILT TOPOGRAPHIC AND PROPERTY SURVEY PREPARED FOR THE VETERANS ADMINISTRATION PITTSBURGH HEALTHCARE SYSTEM BY GAI, CONSULTANTS (412-476-2000). PROJECT # 2006-465-00. UNDERGROUND FACILITIES, STRUCTURES & UTILITIES HAVE BEEN PLOTTED BY GAI, INC. FROM A COMBINATION OF FIELD SURVEY AND AVAILABLE AS-BUILT PLANS AND RECORDS. THEREFORE, THEIR LOCATION AND SIZE MUST BE CONSIDERED APPROXIMATE ONLY. THERE MAY BE OTHERS, THE EXTENT OF WHICH IS PRESENTLY UNKNOWN.
2. CONTRACTOR SHALL FIELD VERIFY EXISTING CONDITIONS AND VERIFY EXACT LOCATION AND DEPTH OF UNDERGROUND UTILITIES BEFORE ANY TYPE OF EXCAVATION BEGINS.
3. CONTRACTOR SHALL NOTIFY PA ONE CALL SYSTEM, INC. IN ACCORDANCE WITH PA ACT 38 FOR LOCATION AND MARKING OF UNDERGROUND UTILITIES.
4. CONTRACTOR SHALL BE RESPONSIBLE FOR SECURING AND UTILIZING AN UNDERGROUND UTILITY LOCATING SERVICE TO MARK ON THE GROUND SURFACE THE LOCATION OF UNDERGROUND UTILITIES ON SITE THAT ARE NOT COVERED IN THE PA ONE CALL NOTIFICATION.

Legend

TC	– TOP OF CURB
BC	– BOTTOM OF CURB
SS	– SANITARY/COMBINED SEWER
CS	– COMBINED SEWER MH
ST	– STORM
MH	– MANHOLE
TOP	– TOP OF CASTING
INV	– INVERT ELEVATION
WV	– WATER VALVE
GV	– GAS VALVE
FH	– FIRE HYDRANT
BM	– BENCH MARK
PM	– PARKING METER
MB	– MAILBOX
FP	– FLAG POLE
LP	– LIGHT POLE
DLC	– DUQUENSE LIGHT COMPANY
TS	– TRAFFIC SIGNAL
CNO	– COULD NOT OPEN
℞	– PROPERTY LINE
BT	– BELL TELEPHONE
PP	– POWER POLE
TW	– TOP OF WALL ❶ GRADE
BW	– BOTTOM OF WALL ❷ GRADE
TG	– TOP OF GRATE
TC	– TERRA COTTA PIPE (WHERE SHOWN NEXT TO SEWER LINE

EXISTING

EX. PROPERTY LINE
EX. RIGHT OF WAY LINE
EX. EASEMENT
900 EX. CONTOURS
EX. GAS LINE
UGE EX. UNDERGROUND ELECTRIC LINE
OHE EX. AERIAL ELECTRIC/ TELEPHONE/CABLE TV
SAN EX. SANITARY SEWER (BY PLAN)
SAN EX. SANITARY SEWER (FIELD)
EX. STORM SEWER
W EX. WATERLINE BY PLAN
EX. FIRE HYDRANT
X — X — X — X — EX. FENCE
B EX. BOLLARD/POST
EX. SIGN
EX. LIGHT POLE
EX. UTILITY POLE
EX. GUY ANCHOR/WIRE
EX. GAS VALVE
EX. TREES
EX. WATER VALVE
EX. GAS METER
908.8 EX. SPOT ELEVATION
EX. (TYPE W) INLET
EX. (TYPE M) INLET
EX. MANHOLE
EX. YARD DRAIN
FP EX. FLAG POLE
LIMIT OF WORK LINE
GUIDERAIL

EXISTING PARKING DATA

EXISTING PARKING SPACES WITH STRIPPING ON PAVEMENT = 164 + (1) ADA.
EXISTING UNMARKED PARKING SPACES = 54
TOTAL EXISTING PARKING SPACES = 218 + (1) ADA

EX. SANITARY MANHOLE DATA

A – MANHOLE
TG = 1135.83

B – MANHOLE
TG = 1158.47
IN=1149.87
IN=1137.17
IN=1137.17
OUT=1137.07

C – MANHOLE
TG = 1162.09
IN 12"=1155.39
IN 12"=1155.14
IN 8"=1150.79
IN 4"=1150.69
IN 24"=1145.79
OUT 24"=1140.69

D – MANHOLE
TG = 1162.48
IN=1149.58
OUT=1149.48

E – MANHOLE
TG = 1159.38
IN=1152.48
IN=1152.48
OUT=1152.38

F – MANHOLE
TG = 1160.67
IN 18"=1151.27
OUT 18"=1151.17

F – MANHOLE
TG = 1160.67
IN 18"=1151.27
OUT 18"=1151.17

G – MANHOLE
TG = 1159.96

H – MANHOLE
TG = 1159.20

I – MANHOLE
TG = 1159.55

J – MANHOLE
TG = 1159.15

K – MANHOLE
TG = 1159.81

L – MANHOLE
TG = 1175.73

EXISTING STORM CATCH BASIN, INLET, & MANHOLE DATA

1 – MANHOLE
TG = 1158.33

2 – INLET/MANHOLE
TG = 1173.12
IN= 1169.32
OUT=NOT VISIBLE

3 – INLET
TG = 1151.09
OUT=1146.89

4 – CATCH BASIN
TG = 1150.86
IN=1146.36

5 – CATCH BISIN
TG = 1150.82
IN=1145.42
OUT=

6 – INLET
TG = 1150.81
IN=1145.91
OUT=1145.86

7 – INLET
TG = 1150.84
IN=1146.44
OUT=1146.24

8 – INLET
TG = 1150.79
OUT=1146.79

9 – INLET
TG = 1150.69
IN=1144.59
OUT=1144.49

10 – INLET
TG = 1150.83
IN=1145.03
OUT=1145.03

11 – INLET
TG = 1150.88
IN=1145.28
OUT=1145.28

12 – INLET
TG = 1150.71
IN=1145.51
OUT=1145.51

13 – INLET
TG = 1150.94
IN=1146.14
OUT=1146.04

14 – INLET
TG = 1151.03
IN=1146.53
OUT=1146.53

15 – INLET
TG = 1151.03
OUT=1146.93

16 – CATCH BASIN
TG = 1157.76
IN 6"=1155.21
OUT=
INV.=1152.56

17 – INLET
TG = 1161.16
IN=1158.06
OUT=1156.56

18 – CATCH BASIN
TG = 1161.10
IN=1157.90
IN=1156.10
OUT=

19 – CATCH BASIN
TG = 1161.11
IN=1158.01
IN=1156.01
OUT=

20 – INLET
TG = 1161.18
IN=1156.38
OUT=1156.38

21 – INLET
TG = 1161.08
IN=1156.78
IN=1156.78

22 – INLET
TG = 1161.00
OUT=1156.20

23 – CATCH BASIN
TG = 1161.07
IN=1156.42
OUT=

24 – INLET
TG = 1161.02
IN=UNABLE TO LOCATE
OUT=1156.42

25 – INLET
TG = 1161.20
IN=1156.80
OUT=1156.70

26 – INLET
TG = 1161.23
OUT=1157.13

27 – INLET
TG = 1161.35
IN=COULD NOT LOCATE
OUT=COULD NOT LOCATE

28 – INLET
TG = 1161.20
UNABLE TO VERIFY

29 – CATCH BASIN
TG = 1161.39
IN=1156.09
OUT=

30 – CATCH BASIN
TG = 1161.10
IN=1156.30
OUT=

31 – INLET
TG = 1161.21
OUT=1156.76

33 – CATCH BASIN
TG = 1156.64
IN 8"=1154.84
IN 8"=1154.79
OUT=1152.49

34 – INLET
TG = 1158.54

35 – CATCH BASIN
TG = 1161.03
IN=1155.93
OUT=

36 – INLET
TG = 1161.21
PIPES/INVERT NOT VISIBLE
TOP OF DIRT=1157.51

37 – INLET
TG = 1161.48
IN=1156.88
OUT=1156.88

38 – INLET
TG = 1161.86
IN=1158.96
OUT=1157.26

39 – CATCH BASIN
TG = 1158.30
IN=1156.40
INV.=1154.30

40 – INLET
TG = 1146.89
IN=1143.19
OUT=1141.39

41 – INLET
TG = 1133.85

42 – INLET
TG = 1161.01

43 – INLET
TG = 1170.94

44 – INLET
TG = 1168.90
OUT = 1166.40

45 – INLET
TG = 1170.65
INV = 1167.53

46 – INLET
TG = 1171.92
OUT = 1167.77

47 – INLET
TG = 1173.68
OUT = 1169.48

48 – INLET
TG = 1172.98
INV = 1170.08

49 – INLET
TG = 1172.73
INV = 1170.23

50 – INLET
TG = 1172.05
INV = 1168.95

51 – DOUBLE INLET
TG = 1175.21

52 – INLET
TG = 1174.26
INV = 1172.51

53 – INLET
TG = 1174.42
INV = 1170.92

54 – INLET
TG = 1173.60
IN= 1170.35
OUT=1169.80

55 – INLET
TG = 1169.59

56 – INLET
TG = 1172.80

57 – INLET
TG = 1174.91
INV = 1171.69

58 – INLET
TG = 1175.08
INV = 1172.78

59 – INLET
TG = 1164.15

60 – INLET
TG = 1157.23

61 – INLET
TG = 1158.00

62 – INLET
TG = 1158.20

63 – INLET
TG = 1158.27

64 – INLET
TG = 1158.58

65 – DRAIN
TG = 1159.00

66 – INLET
TG = 1159.08

67 – INLET
TG = 1158.14
IN 6" PVC=1156.49
OUT 10" PVC=1154.49

68 – INLET
TG = 1158.17
IN = 1153.47
OUT = 1153.37

69 – INLET
TG = 1159.44
IN = 1157.14
OUT = 1155.84

70 – INLET
TG = 1173.74
INV = 1167.59

71 – MANHOLE
TG = 1171.30
IN(ALL)= 1166.60
OUT = 1166.00

72 – MANHOLE
TG = 1176.12

FOR CONSTRUCTION
FULLY SPRINKLERED

CONSULTANTS:

HDR Architecture, Inc.
1101 King Street | Suite 400 | Alexandria, Virginia 22314-2944 | 703.518.8500

Revisions: Date

ARCHITECT/ENGINEERS:

ARCHITECTURE ENGINEERING INTERIOR DESIGN DESIGN/BUILD
ASTORINO
227 Fort Pitt Boulevard Pittsburgh Pennsylvania 15222
TEL 412 765 1700 FAX 412 765 1711 www.astorino.com

Drawing Title: Site Exisitng Conditions Plan

Approved: Project Director

Project Title: VA GARES CONSOLIDATION VAMC, PITTSBURGH, PA RESEARCH OFFICE BLDG.

Location: VAPHS UNIVERSITY DRIVE

Date: 08-18-2010 | Checked: MED | Drawn: NAA

Project Number: [redacted]

Building Number: 39

Drawing Number: CS1-000 Dwg. – of –

Office of Facilities Management
Department of Veterans Affairs

VA FORM 08-6231, OCT 1978

P:\Project\2005425.00\CAD\UNIVERSITY DRIVE\Research Office Building\SHA\CS1-000.dwg MDAMICO 08/16/10 ; 10:09:33

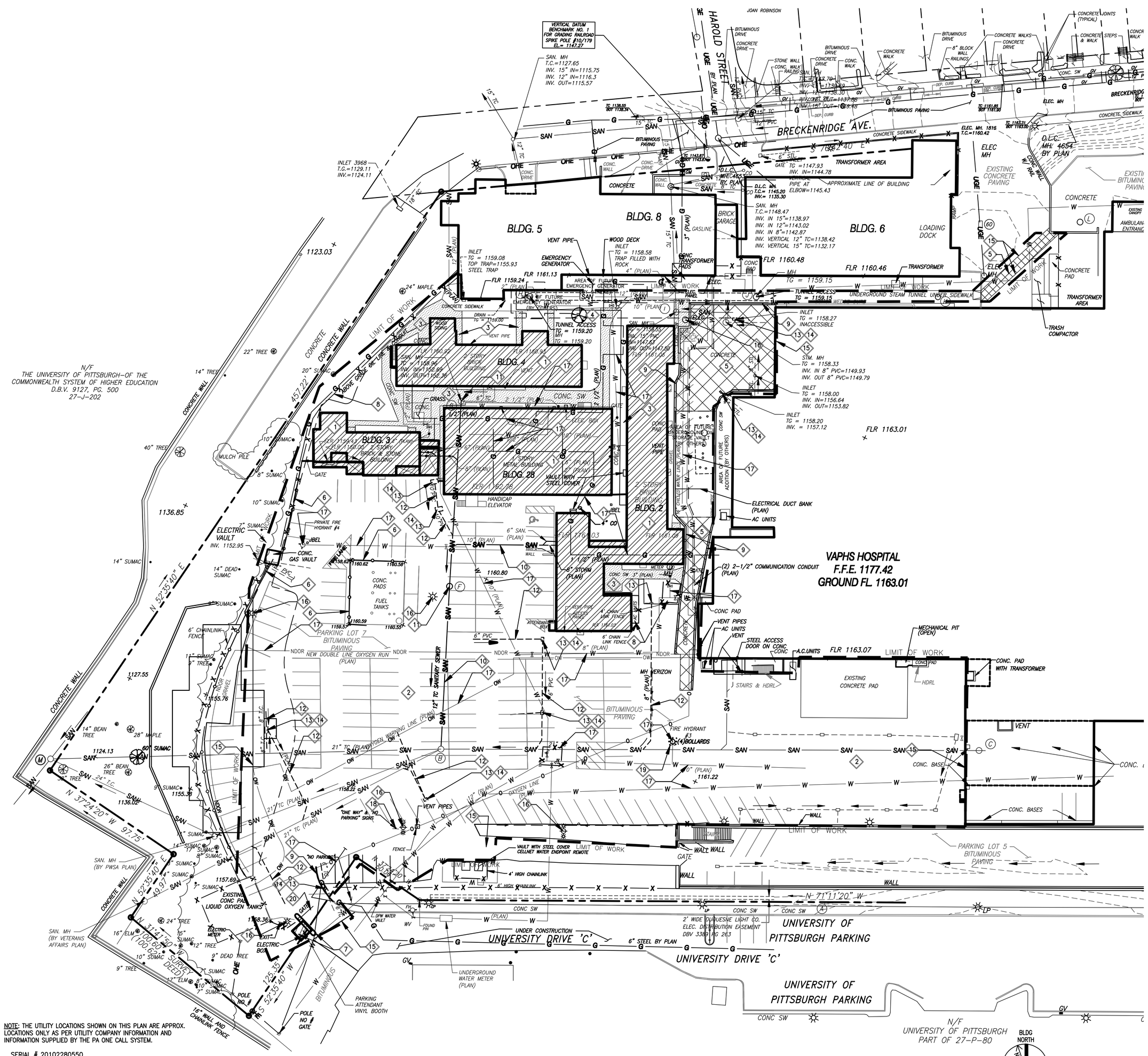

NOTE: THE UTILITY LOCATIONS SHOWN ON THIS PLAN ARE APPROX. LOCATIONS ONLY AS PER UTILITY COMPANY INFORMATION AND INFORMATION SUPPLIED BY THE PA ONE CALL SYSTEM.

SERIAL # 20102280550

Design:

*BEFORE YOU DIG ANYWHERE IN PENNSYLVANIA STOP! CALL PA. ONE-CALL AT 1-800-242-1776 TOLL FREE FOR ACTUAL FIELD UTILITY LOCATIONS.

PENNSYLVANIA ACT 38 (1991) REQUIRES NO LESS THAN 3 WORKING DAYS NOTICE NOR MORE THAN 10 WORKING DAYS NOTICE FROM EXCAVATORS WHO ARE ABOUT TO DIG, DRILL, BLAST, AUGER, BORE, GRADE, TRENCH, OR DEMOLISH WHEN IN THE CONSTRUCTION PHASE. A DESIGNER IS REQUIRED TO GIVE NO LESS THAN 10 WORKING DAYS NOR MORE THAN 90 WORKING DAYS NOTICE WHEN ENGAGED IN THE DESIGN PHASE. BOTH OF THESE CONDITIONS INVOLVE THE ENTIRE COMMONWEALTH.

1 Site Demolition Plan

SCALE: 1" = 30'

30 15 0 30 60

SCALE: 1" = 30'

Site Demolition General Notes

1. WITHIN THE LIMIT OF WORK, DEMOLISH AND REMOVE EVERYTHING NECESSARY TO FACILITATE CONSTRUCTION UNLESS OTHERWISE NOTED.
2. SEE ENGINEERING DRAWINGS FOR DISPOSITION OF UTILITY DEMOLITION/RELOCATION: PS5-000, MUS-101, ED0-201, ES0-201, TD0-201, TS0-201.
3. CONTRACTOR TO VERIFY LOCATION AND INVERT ELEVATIONS OF ALL UTILITIES INCLUDING STORM, SANITARY, AND COMBINED SEWERS PRIOR TO ANY CONSTRUCTION AND/OR DEMOLITION WORK, TO VERIFY PROPOSED SEWER DESIGN.
4. THE CONTRACTOR IS REQUIRED TO SAW CUT ALL JOINTS AT THE LIMIT OF WORK IN THE AREA OF NEW CONSTRUCTION.

Site Demolition Key Notes

1. DEMOLISH EXISTING BUILDINGS, SEE DEMOLITION SPECIFICATION SECTION 024100.
2. REMOVE All EXISTING ASPHALT PAVEMENT & AGGREGATE BASE WITHIN THE PROJECT AREA.
3. REMOVE EXISITING CONCRETE SIDEWALKS & SLABS
4. REMOVE EXISTING TREE
5. REMOVE EXISTING VEHICULAR CONCRETE PAVEMENT
6. REMOVE GUIDERAIL INCLUDING ALL POSTS & FOOTINGS WITHIN THE LIMIT OF WORK.
7. REMOVE GUARD BOOTH, CONCRETE ISLAND AND ELECTRONIC ARM GATE
8. REMOVE CHAIN LINK FENCE AND/OR SWING GATES INCLUDING ALL POSTS & FOOTINGS
9. REMOVE CONCRETE CURB.
10. —SAN— REMOVE EXISTING SANITARY SEWER LINE IN ITS ENTIRETY. FILL CAVITY AND COMPACT IN ACCORDANCE WITH SPECIFICATIONS. CAP ABANDONED SEWER LINE AT ACTIVE SEWER LINE AND/OR MANHOLE. ALSO SEE CIVIL DRAWINGS CS7-000 & CS7-900.
11. MH REMOVE EXISTING SANITARY SEWER MANHOLE IN ITS ENTIREY. FILL CAVITY AND COMPACT IN ACCORDANCE WITH SPECIFICATIONS. CAP ABANDONED SEWER LINE AT ACTIVE SEWER LINE AND/OR MANHOLE. ALSO SEE CIVIL DRAWINGS CS7-000 & CS7-900.
12. —STORM— REMOVE EXISTING STORM SEWER LINE IN ITS ENTIREY. FILL CAVITY AND COMPACT IN ACCORDANCE WITH SPECIFICATIONS. CAP ABANDONED SEWER LINE AT ACTIVE SEWER LINE AND/OR MANHOLE. ALSO SEE CIVIL DRAWINGS CS7-000 & CS7-900.
13. REMOVE EXISTING DRAIN INLET IN ITS ETIRETY. FILL CAVITY AND COMPACT IN ACCORDANCE WITH SPECIFICATIONS. CAP ABANDONED SEWER LINE AT ACTIVE SEWER LINE AND/OR MANHOLE. ALSO SEE CIVIL DRAWINGS.
14. E & S CONTROL MEASURES TO REMAIN IN PLACE AT EXISTING INLETS UNTIL DEMOLITION/REMOVAL.
15. SAWCUT EXISTING PAVEMENT AT DEMARCATION OF PAVEMENT TO BE REMOVED
16. SEE ELECTRICAL TELECOMUNICATON DRAWINGS FOR DEMOLITION/DISPOSITON OF LIGHT POLES & UNDERGROUND ELECTRICAL LINES & ELECTRICAL MANHOLES.
17. SEE PLUMBING & HVAC DRAWINGS FOR DEMOLITON/DISPOSITION OF EXISTING WATER LINES, HYDRANTS, GAS LINE, VALVES, OXYGEN LINES, STEAM AND CHILLED WATER LINES, ETC.
18. REMOVE SIGNAGE
19. REMOVE BOLLARDS
20. REMOVE ELECTRICALLY OPERATED GATES & CARD READERS. SEE ELECTRICAL & TELECOMMUNICATIONS DRAWINGS FOR DISPOSITION OF EXISTING ELECTRICAL AND TELECOMMUNICATIONS CONDUITS.
21. CONTRACTOR IS RESPONSIBLE FOR REPAIRING ANY DAMAGE TO ASPHALT PAVEMENT/AGGREGATE BASE WITHING PARKING AREAS @ (UNIVERSITY OF PITTSBURGH PROPERTY) AND CARTWAY KNOWN AS UNIVERSITY DRIVE 'C' (UNIVERSITY DRIVE 'C' IS VA EASEMENT THROUGHT PITT PROPERTY). CONTRACTOR TO RESTORE ANY DAMAGED PAVEMENT TO MATCH EXISTING ASPHALT PAVEMENT BINDER/WEARING COURSE DEPTH AND AGGREGATE BASE DEPTH.

Legend

TC - TOP OF CURB
BC - BOTTOM OF CURB
SS - SANITARY/COMBINED SEWER
CS - COMBINED SEWER MH
ST - STORM
MH - MANHOLE
TOP - TOP OF CASTING
INV - INVERT ELEVATION
WV - WATER VALVE
GV - GAS VALVE
FH - FIRE HYDRANT
BM - BENCH MARK
PM - PARKING METER
MB - MAILBOX
FP - FLAG POLE
LP - LIGHT POLE
DLC - DUQUENSE LIGHT COMPANY
TS - TRAFFIC SIGNAL
CNO - COULD NOT OPEN
PL - PROPERTY LINE
BT - BELL TELEPHONE
PP - POWER POLE
TW - TOP OF WALL @ GRADE
BW - BOTTOM OF WALL @ GRADE
TG - TOP OF GRATE
TC - TERRA COTTA PIPE (WHERE SHOWN NEXT TO SEWER LINE

EXISTING

EX. PROPERTY LINE
EX. RIGHT OF WAY LINE
EX. EASEMENT
900 EX. CONTOURS
EX. GAS LINE
UGE EX. UNDERGROUND ELECTRIC LINE
OHE EX. AERIAL ELECTRIC/ TELEPHONE/CABLE TV
SAN EX. SANITARY SEWER (BY PLAN)
SAN EX. SANITARY SEWER (FIELD)
EX. STORM SEWER
W EX. WATERLINE BY PLAN
EX. FIRE HYDRANT
EX. FENCE
+B EX. BOLLARD/POST
EX. SIGN
EX. LIGHT POLE
EX. UTILITY POLE
EX. GUY ANCHOR/WIRE
EX. GAS VALVE
EX. TREES
EX. WATER VALVE
EX. GAS METER
908.8 EX. SPOT ELEVATION
EX. (TYPE W) INLET
EX. (TYPE M) INLET
EX. MANHOLE
EX. YARD DRAIN
FP EX. FLAG POLE
LIMIT OF WORK LINE
GUIDERAIL

PROPOSED

- PROPOSED FENCE
+ 908.8 - PROPOSED SPOT ELEVATION
908 - PROPOSED CONTOURS
- PROPOSED INLET
- PROPOSED MANHOLE
N 1000.00 E 1000.00 - PROPOSED COORDINATE POINT
- PROPOSED UTILITY POLE
- PROPOSED SIGN
- PROPOSED LIGHT POLE
- PROPOSED STORM SEWER
- SIDEWALK CONTROL JOINT
- SIDEWALK EXPANSION JOINT
- BITUMINOUS PAVEMENT
- HEAVY DUTY VEHICULAR CONCRETE PAVEMENT
- CONCRETE CURB & GUTTER
- CONCRETE CURB
- CHAIN LINK FENCE
- PAVEMENT SUBDRAIN
- GUIDERAIL

FOR CONSTRUCTION
FULLY SPRINKLERED

Revisions:	Date

CONSULTANTS:

HDR

HDR Architecture, Inc.

1101 King Street | Suite 400 | Alexandria, Virginia 22314-2944 | 703.518.8500

ARCHITECT/ENGINEERS:

ARCHITECTURE ENGINEERING INTERIOR DESIGN DESIGN/BUILD

ASTORINO

227 Fort Pitt Boulevard Pittsburgh Pennsylvania 15222
TEL 412 765 1700 FAX 412 765 1711 www.astorino.com

Drawing Title: Site Demolition Plan	Project Title: VA CARES CONSOLIDATION VAMC, PITTSBURGH, PA RESEARCH OFFICE BLDG.	Project Number: 0450A3S08	Office of Facilities Management
Approved: Project Director	Location: VAPHS UNIVERSITY DRIVE	Building Number: 89	
	Date: 08-18-2010 / Checked: MED / Drawn: MED	Drawing Number: CS2-000 Dwg. – of –	Department of Veterans Affairs

VA FORM 08-6231, OCT 1978

P:\Project\2005425.00\CAD\UNIVERSITY DRIVE\Research Office Building\Site\CS2-000.dwg MDAMICO 08/16/10 ; 10:11:13

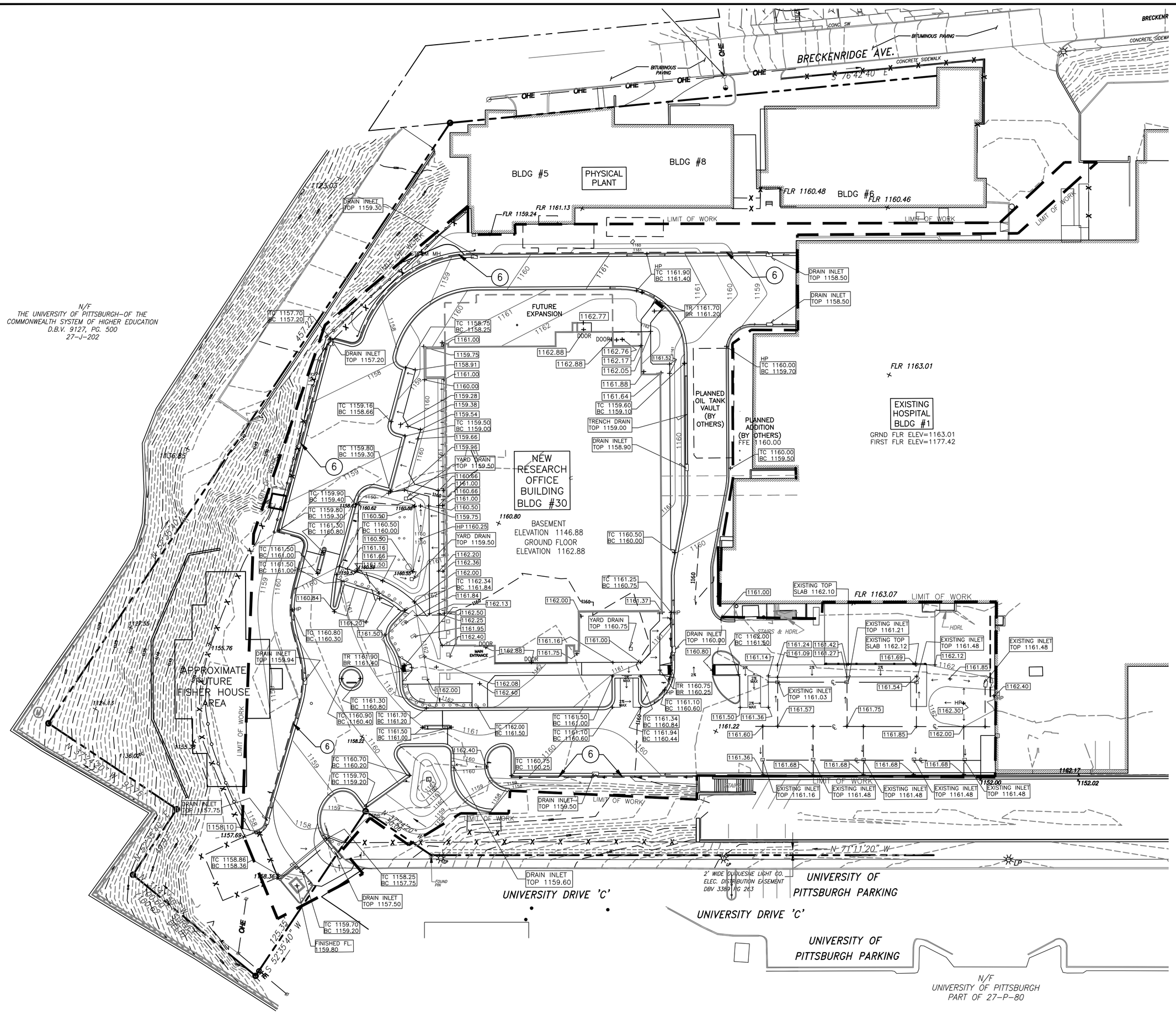

Site Grading Plan Notes

1. CONTRACTOR SHALL FIELD VERIFY EXISTING CONDITIONS AND VERIFY EXACT LOCATION AND DEPTH OF UNDERGROUND UTILITIES BEFORE ANY TYPE OF EXCAVATION BEGINS.
2. CONTRACTOR SHALL NOTIFY PA ONE CALL SYSTEM, INC. IN ACCORDANCE WITH PA ACT 38 FOR LOCATION AND MARKING OF UNDERGROUND UTILITIES.
3. CONTRACTOR SHALL BE RESPONSIBLE FOR SECURING AND UTILIZING AN UNDERGROUND UTILITY LOCATING SERVICE TO MARK ON THE GROUND SURFACE THE LOCATION OF UNDERGROUND UTILITIES ON SITE THAT ARE NOT COVERED IN THE PA ONE CALL NOTIFICATION.
4. RAISE AND/OR LOWER EXISTING MANHOLE/DRAIN INLET AS REQUIRED TO MEET PROPOSED ELEVATIONS.
5. CROSS PITCH SIDEWALKS 2% AWAY FROM BUILDINGS AND/OR TOWARD CURB LINES/PARKING AREAS.
6. TYPICAL - SUBDRAIN AT CURB AND GUTTER. SEE DETAIL 7-CS5-900. RUN AT MINIMUM 1% SLOPE TO DRAIN INLET.

Legend

TC - TOP OF CURB
BC - BOTTOM OF CURB
SS - SANITARY/COMBINED SEWER
CS - COMBINED SEWER MH
ST - STORM
MH - MANHOLE
TOP - TOP OF CASTING
INV - INVERT ELEVATION
WV - WATER VALVE
GV - GAS VALVE
FH - FIRE HYDRANT
BM - BENCH MARK
PM - PARKING METER
MB - MAILBOX
FP - FLAG POLE
LP - LIGHT POLE
DLC - DUQUENSE LIGHT COMPANY
TS - TRAFFIC SIGNAL
CNO - COULD NOT OPEN
PL - PROPERTY LINE
BT - BELL TELEPHONE
PP - POWER POLE
TW - TOP OF WALL @ GRADE
BW - BOTTOM OF WALL @ GRADE
TG - TOP OF GRATE
TC - TERRA COTTA PIPE (WHERE SHOWN NEXT TO SEWER LINE

EXISTING

- EX PROPERTY LINE
- EX. RIGHT OF WAY LINE
- EX. EASEMENT
- EX. CONTOURS
- EX. GAS LINE
- EX. UNDERGROUND ELECTRIC LINE
- EX. AERIAL ELECTRIC/ TELEPHONE/CABLE TV
- EX. SANITARY SEWER (BY PLAN)
- EX. SANITARY SEWER (FIELD)
- EX. STORM SEWER
- EX. WATERLINE BY PLAN
- EX. FIRE HYDRANT
- EX. FENCE
- EX. BOLLARD/POST
- EX. SIGN
- EX. LIGHT POLE
- EX. UTILITY POLE
- EX. GUY ANCHOR/WIRE
- EX. GAS SVALVE
- EX. TREES
- EX. WATER VALVE
- EX. GAS METER
- EX. SPOT ELEVATION
- EX. (TYPE W) INLET
- EX. (TYPE M) INLET
- EX. MANHOLE
- EX. YARD DRAIN
- EX. FLAG POLE
- LIMIT OF WORK LINE
- GUIDERAIL

PROPOSED

- PROPOSED FENCE
- PROPOSED SPOT ELEVATION
- PROPOSED CONTOURS
- PROPOSED INLET
- PROPOSED MANHOLE
- PROPOSED COORDINATE POINT
- PROPOSED UTILITY POLE
- PROPOSED SIGN
- PROPOSED LIGHT POLE
- PROPOSED STORM SEWER
- SIDEWALK CONTROL JOINT
- SIDEWALK EXPANSION JOINT
- BITUMINOUS PAVEMENT
- HEAVY DUTY VEHICULAR CONCRETE PAVEMENT
- CONCRETE CURB & GUTTER
- CONCRETE CURB
- CHAIN LINK FENCE
- PAVEMENT SUBDRAIN
- GUIDERAIL

NOTE: THE UTILITY LOCATIONS SHOWN ON THIS PLAN ARE APPROX. LOCATIONS ONLY AS PER UTILITY COMPANY INFORMATION AND INFORMATION SUPPLIED BY THE PA ONE CALL SYSTEM.

SERIAL # 20102280550
Design:

*BEFORE YOU DIG ANYWHERE IN PENNSYLVANIA STOP! CALL PA. ONE-CALL AT 1-800-242-1776 TOLL FREE FOR ACTUAL FIELD UTILITY LOCATIONS.

PENNSYLVANIA ACT 38 (1991) REQUIRES NO LESS THAN 3 WORKING DAYS NOTICE NOR MORE THAN 10 WORKING DAYS NOTICE FROM EXCAVATORS WHO ARE ABOUT TO DIG, DRILL, BLAST, AUGER, BORE, GRADE, TRENCH, OR DEMOLISH WHEN IN THE CONSTRUCTION PHASE. A DESIGNER IS REQUIRED TO GIVE NO LESS THAN 10 WORKING DAYS NOR MORE THAN 90 WORKING DAYS NOTICE WHEN ENGAGED IN THE DESIGN PHASE. BOTH OF THESE CONDITIONS INVOLVE THE ENTIRE COMMONWEALTH.

1 Site Grading Plan

SCALE: 1" = 30'

BLDG NORTH

30 15 0 30 60
SCALE: 1" = 30'

FOR CONSTRUCTION
FULLY SPRINKLERED

Revisions:	Date

CONSULTANTS:

HDR

HDR Architect-co, Inc.
1101 King Street | Suite 400 | Alexandria, Virginia 22314-2944 | 703.518.8500

ARCHITECT/ENGINEERS:

ARCHITECTURE ENGINEERING INTERIOR DESIGN DESIGN/BUILD
ASTORINO
227 Fort Pitt Boulevard Pittsburgh Pennsylvania 15222
TEL 412 765 1700 FAX 412 765 1711 www.astorino.com

Drawing Title	Site Grading Plan
Approved: Project Director	
Project Title	VA CARES CONSOLIDATION VAMC, PITTSBURGH, PA RESEARCH OFFICE BLDG.
Location	VAPHS UNIVERSITY DRIVE
Date	08-18-2010
Checked	MED
Drawn	MED
Project Number	04GC4A55GR
Building Number	30
Drawing Number	CS4-000
Dwg. – of –	

Office of Facilities Management
Department of Veterans Affairs

VA FORM 08-6231, OCT 1978

P:\Project\2005425.00\CAD\UNIVERSITY DRIVE\Research Office Building\Site\CS4-000.dwg MDAMICO 08/16/10 ; 10:12:17

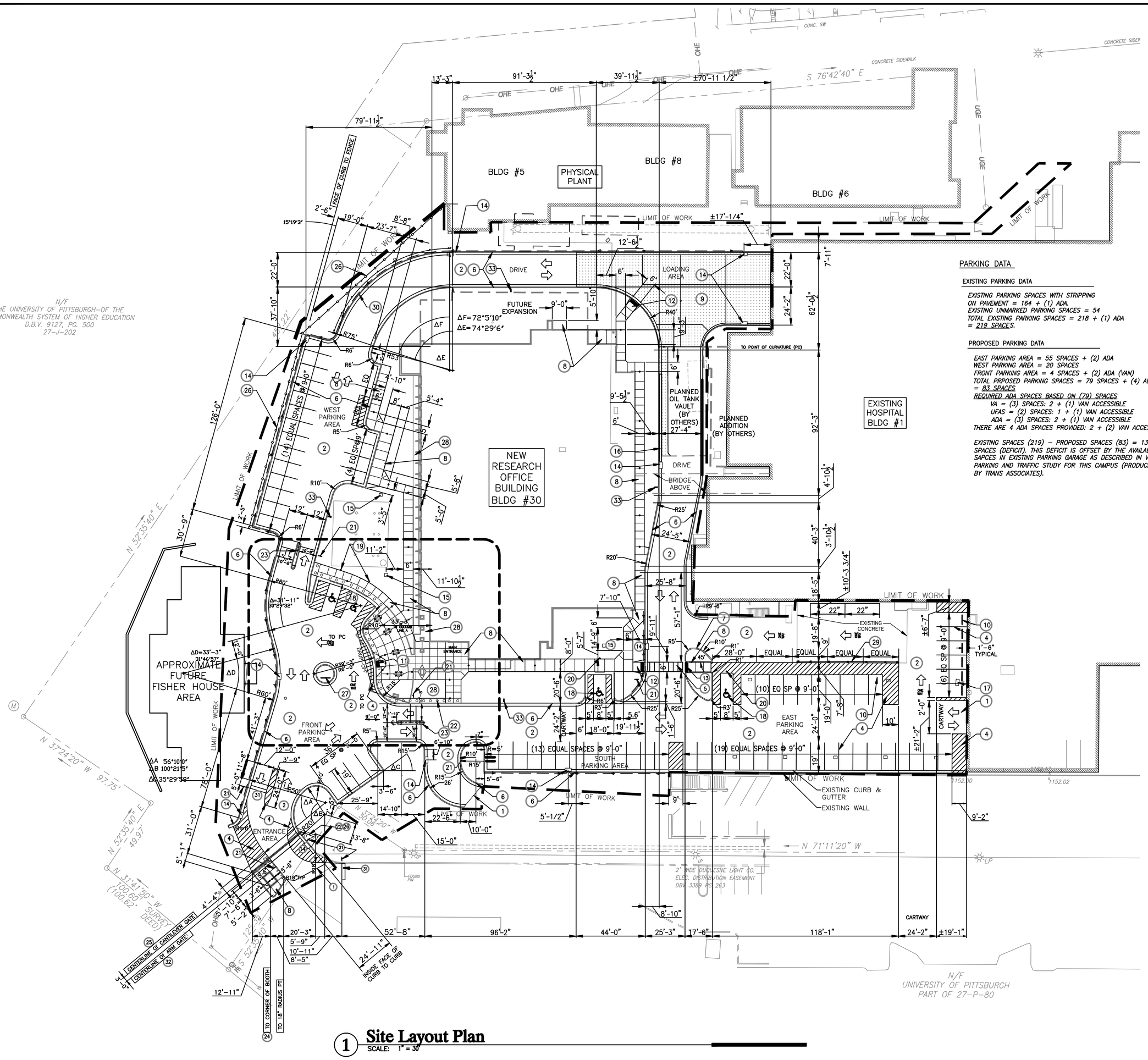

1 Site Layout Plan
SCALE: 1" = 30'

PARKING DATA

EXISTING PARKING DATA

EXISTING PARKING SPACES WITH STRIPPING ON PAVEMENT = 164 + (1) ADA.
EXISTING UNMARKED PARKING SPACES = 54
TOTAL EXISTING PARKING SPACES = 218 + (1) ADA = 219 SPACES.

PROPOSED PARKING DATA

EAST PARKING AREA = 55 SPACES + (2) ADA
WEST PARKING AREA = 20 SPACES
FRONT PARKING AREA = 4 SPACES + (2) ADA (VAN)
TOTAL PRPOSED PARKING SPACES = 79 SPACES + (4) ADA = 83 SPACES
REQUIRED ADA SPACES BASED ON (79) SPACES
VA = (3) SPACES: 2 + (1) VAN ACCESSIBLE
UFAS = (2) SPACES: 1 + (1) VAN ACCESSIBLE
ADA = (3) SPACES: 2 + (1) VAN ACCESSIBLE
THERE ARE 4 ADA SPACES PROVIDED: 2 + (2) VAN ACCESS

EXISTING SPACES (219) – PROPOSED SPACES (83) = 136 SPACES (DEFICIT). THIS DEFICIT IS OFFSET BY THE AVAILABLE SAPCES IN EXISTING PARKING GARAGE AS DESCRIBED IN VA PARKING AND TRAFFIC STUDY FOR THIS CAMPUS (PRODUCED BY TRANS ASSOCIATES).

Site Layout Key Notes

1. SAWCUT, KEY & SEAL ASPHALT PAVEMENT BETWEEN NEW & EXISTING ASPHALT SURFACES
2. ASPHALT PAVEMENT & STONE BASE, SEE DETAIL 4/CS5-900
3. TYPICAL - PAINTED ARROW PAVEMENT MARKING, SEE DETAIL 2/CS5-000
4. TYPICAL - PARKING SPACE STRIPPING 4" WIDE WHITE PAINTED LINES, TYPICAL - HATCHING 4" WIDE 45° DIAGONAL, WHITE PAINTED LINES, 30" ON CENTER
5. CROSSWALK PAVEMENT MARKING - SOLID WIDE RECTANGLES 3'-0" WIDE x6'-0" LENGTH EQUALLY SPACED, 3'-0" APART
6. CONCRETE CURB & GUTTER, SEE DETAIL 7/CS5-900
7. CONCRETE FULL-DEPTH CURB, SEE DETAIL 13/CS5-900
8. TYPICAL - CONCRETE SIDEWALK/PAVEMENT, CONTROL & EXPANSION JOINTS, SEE DETAIL 8/CS5-900
9. HEAVY-DUTY VEHICULAR CONCRETE PAVEMENT, SEE DETAIL 9/CS5-900
10. PRECAST CONCRETE WHEEL STOP, 8" WIDE x 6" HIGH x 6'-0" LENGTH, ANCHOR IN PAVEMENT WITH (2) #4 - 24" GALVANIZED STEEL REBAR
11. FLARED CONCRETE CURB RAMP, SEE DETAIL 6/CS5-900
12. CONCRETE CURB RAMP, SEE DETAIL 6/CS5-900
13. DETECTABLE WARNING PANEL, MATCH SAME ON CURB RAMPS
14. DRAIN INLET, 2'-0"x4'-0", SEE DRAWING CS7-000
15. YARD DRAIN, 2'-0"x2'-0", SEE DRAWING CS7-000
16. ACO POLYMER PRODUCTS, INC. (OR EQUAL MANUFACUTURER) S300 POWER DRAIN PRECAST CONCRETE TRENCH DRAIN SYSTEM WITH (16) PRE-SLOPED 1 METER SECTIONS SK3-1 - SK3-16, WITH HEAVY-DUTY SLOTTED DUCTILE IRON GRATE PROVIDE BOITOM VERTICAL DROP OUTLET. CONNECT TO STORM SYSTEM. SEE CS7-000.
17. EXISITING DRAIN INLETS (9) IN EAST PARKING AREA TO REMAIN
18. TYPICAL-ADA PARKING STALL LAYOUT & COMBINATION CURB WHEEL STOP, SEE DETAIL 10/CS5-900. MINIMUM AISLE WIDTH = 5'-0".
19. ADA 'VAN ACCESSIBLE' PARKING SIGN, SEE DETAIL 3/CS5-900
20. ADA PARKING SIGN, SEE DETAIL 3/CS5-900
21. STOP SIGN, SEE DETAIL 2/CS5-900
22. PRECAST CONCRETE K-4 RATED BOLLARD SYSTEM, SEE DETAIL 5/CS5-900
23. CONCRETE CURBED ISLAND WITH ELECTRIC OPERATED ARM GATES & CARD READERS, SEE DETAIL 12/CS5-900
24. PRE-FABRICATED GUARD BOOTH, SEE SPECIFICATIONS AND ARCHITECTURAL DRAWING AS2-102.
25. CRASH BEAM CANTILEVERED ELECTRICALLY OPERATED SLIDE GATE, SEE DETAIL 1/CS5-900
26. CHAIN LINK FENCE, 8' HEIGHT, VERIFY LENGTH, SEE SPECIFICATIONS
27. POST & PANEL IDENTIFICATION SIGN, SEE SPECIFICATIONS
28. OVERSIZE (4"x8") ORNAMENTAL RIVER STONE OVER NON-WOVEN HEAVY-DUTY WEED BARRIER GEOTEXTILE
29. 60 LF OF PENNDOT GALVANIZED STEEL WEAK POST GUIDERAIL SYSTEM (33" HEIGHT), MOUNT GUIDERAIL TO EXISTING CONCRETE SLAB WITH 11"x11"x3/4" GALVANIZED STEEL BASE PLATES ANCHORED WITH (4) 7/8"x8" GALV. STEEL ANCHOR BOLTS EPOXY SET IN SLAB, W6x9 POSTS SHALL BE WELDED TO BASE PLATES, TERMINATE ENDS OF GUIDERAIL WITH STANDARD FULL RADIUS SECTIONS, MATERIALS AND INSTALLATION SHALL BE IN STRICT CONFORMANCE TO PENNDOT PUBLICATION 408
30. 100 LF OF PENNDOT GALVANIZED STEEL WEAK POST GUIDERAIL SYSTEM (33" HEIGHT) WITH W6x9 POSTS DRIVEN INTO EARTH. TERMINATE ENDS OF GUIDERAIL WITH STANDARD FULL RADIUS SECTIONS, MATERIALS AND INSTALLATION SHALL BE IN STRICT CONFORMANCE TO PENNDOT PUBLICATION 408.
31. 24" WIDE X 10'-6" WHITE PAINTED STOP BAR PAVEMENT MARKING.
32. ELECTRIC OPERATED ARM GATE, CARD READER AND BOLLARDS SAME AS SHOWN ON DETAIL 12-CS5-900. NOTE: BOLLARDS 4'-0" O.C.
33. (2) 12" X 18" ALUMINUM REFLECTIVE REGULATION "FIRE LANE" SIGN MOUNTED ON SAME POST AND HEIGHT AS STOP SIGN. TWO SIGNS WITH COPY FACING BOTH DIRECTIONS.

Legend

TC	- TOP OF CURB
BC	- BOTTOM OF CURB
SS	- SANITARY/COMBINED SEWER
CS	- COMBINED SEWER MH
ST	- STORM
MH	- MANHOLE
TOP	- TOP OF CASTING
INV	- INVERT ELEVATION
WV	- WATER VALVE
GV	- GAS VALVE
FH	- FIRE HYDRANT
BM	- BENCH MARK
PM	- PARKING METER
MB	- MAILBOX
FP	- FLAG POLE
LP	- LIGHT POLE
DLC	- DUQUENSE LIGHT COMPANY
TS	- TRAFFIC SIGNAL
CNO	- COULD NOT OPEN
℞	- PROPERTY LINE
BT	- BELL TELEPHONE
PP	- POWER POLE
TW	- TOP OF WALL @ GRADE
BW	- BOTTOM OF WALL @ GRADE
TG	- TOP OF GRATE
TC	- TERRA COTTA PIPE (WHERE SHOWN NEXT TO SEWER LINE

EXISTING

- EX. PROPERTY LINE
- EX. RIGHT OF WAY LINE
- EX. EASEMENT
- EX. CONTOURS
- EX. GAS LINE
- EX. UNDERGROUND ELECTRIC LINE
- EX. AERIAL ELECTRIC/ TELEPHONE/CABLE TV
- EX. SANITARY SEWER (BY PLAN)
- EX. SANITARY SEWER (FIELD)
- EX. STORM SEWER
- EX. WATERLINE BY PLAN
- EX. FIRE HYDRANT
- EX. FENCE
- EX. BOLLARD/POST
- EX. SIGN
- EX. LIGHT POLE
- EX. UTILITY POLE
- EX. GUY ANCHOR/WIRE
- EX. GAS VALVE
- EX. TREES
- EX. WATER VALVE
- EX. GAS METER
- EX. SPOT ELEVATION
- EX. (TYPE W) INLET
- EX. (TYPE M) INLET
- EX. MANHOLE
- EX. YARD DRAIN
- EX. FLAG POLE
- LIMIT OF WORK LINE
- GUIDERAIL

PROPOSED

- PROPOSED FENCE
- PROPOSED SPOT ELEVATION
- PROPOSED CONTOURS
- PROPOSED INLET
- PROPOSED MANHOLE
- PROPOSED COORDINATE POINT
- PROPOSED UTILITY POLE
- PROPOSED SIGN
- PROPOSED LIGHT POLE
- PROPOSED STORM SEWER
- SIDEWALK CONTROL JOINT
- SIDEWALK EXPANSION JOINT
- BITUMINOUS PAVEMENT
- HEAVY DUTY VEHICULAR CONCRETE PAVEMENT
- CONCRETE CURB & GUTTER
- CONCRETE CURB
- CHAIN LINK FENCE
- PAVEMENT SUBDRAIN
- GUIDERAIL

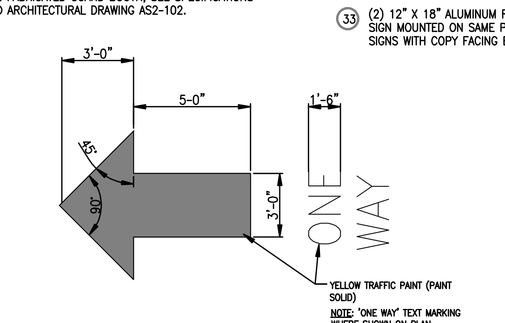

2 Traffic Arrow Pavement Marking
SCALE: NTS

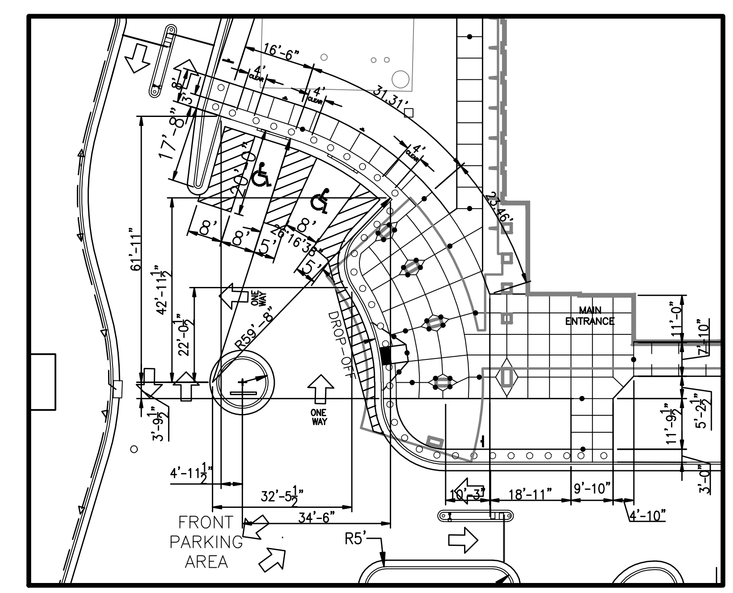

3 Site Layout Plan - Enlargment @ SW Corner
SCALE: 1" = 20'

NOTE: THE UTILITY LOCATIONS SHOWN ON THIS PLAN ARE APPROX. LOCATIONS ONLY AS PER UTILITY COMPANY INFORMATION AND INFORMATION SUPPLIED BY THE PA ONE CALL SYSTEM.

SERIAL # 20102280550
Design:

*BEFORE YOU DIG ANYWHERE IN PENNSYLVANIA STOP! CALL PA. ONE-CALL AT 1-800-242-1776 TOLL FREE FOR ACTUAL FIELD UTILITY LOCATIONS.

PENNSYLVANIA ACT 38 (1991) REQUIRES NO LESS THAN 3 WORKING DAYS NOTICE NOR MORE THAN 10 WORKING DAYS NOTICE FROM EXCAVATORS WHO ARE ABOUT TO DIG, DRILL, BLAST, AUGER, BORE, GRADE, TRENCH, OR DEMOLISH WHEN IN THE CONSTRUCTION PHASE. A DESIGNER IS REQUIRED TO GIVE NO LESS THAN 10 WORKING DAYS NOR MORE THAN 90 WORKING DAYS NOTICE WHEN ENGAGED IN THE DESIGN PHASE. BOTH OF THESE CONDITIONS INVOLVE THE ENTIRE COMMONWEALTH.

BLDG NORTH

30 15 0 30 60
SCALE: 1" = 30'

FOR CONSTRUCTION
FULLY SPRINKLERED

Revisions:	Date

CONSULTANTS:

HDR
HDR Architect-eg, Inc.
1101 King Street | Suite 400 | Alexandria, Virginia 22314-2944 | 703.518.8600

ARCHITECT/ENGINEERS:

ARCHITECTURE ENGINEERING INTERIOR DESIGN DESIGN/BUILD
ASTORINO
223 First Pitt Boulevard Pittsburgh Pennsylvania 15222
TEL 412.765.1700 FAX 412.765.1711 www.astorino.com

Drawing Title	Site Layout Plan
Approved: Project Director	
Project Title	VA CARES CONSOLIDATION VAMC, PITTSBURGH, PA RESEARCH OFFICE BLDG.
Project Number	640CA00028
Building Number	30
Location	VAPHS UNIVERSITY DRIVE
Date	08-18-2010
Checked	MED
Drawn	MED
Drawing Number	CS5-000
Dwg. – of –	

Office of Facilities Management
Department of Veterans Affairs

VA FORM 08-6231, OCT 1978

P:\Project\2005425.00\CAD\UNIVERSITY DRIVE\Research Office Building\Site\CS5-000.dwg MDAMICO 08/16/10 , 10:18:20

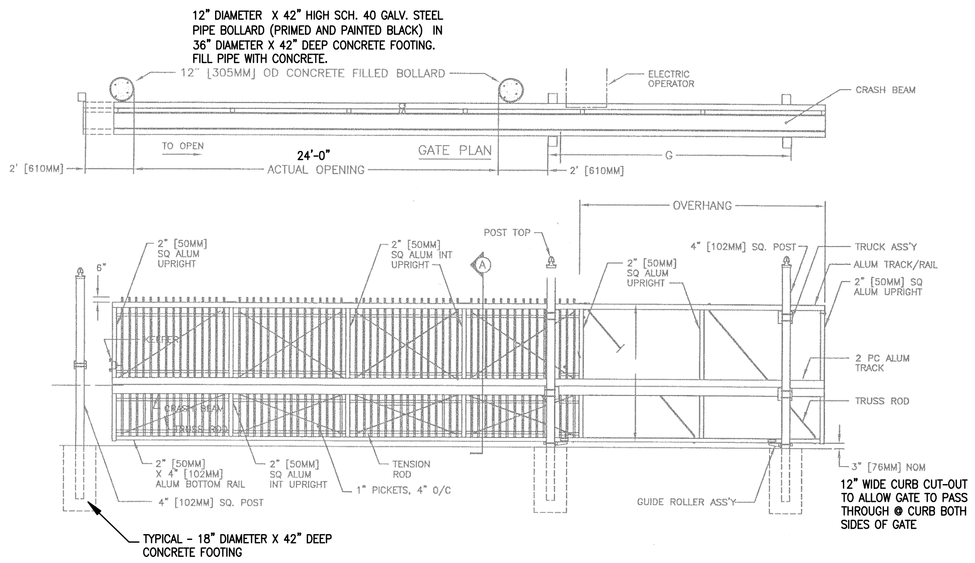

1 Cantilevered Slidie Gate/Vehicle Stop Crash Beam

SCALE: N.T.S. — PLAN, ELEVATION

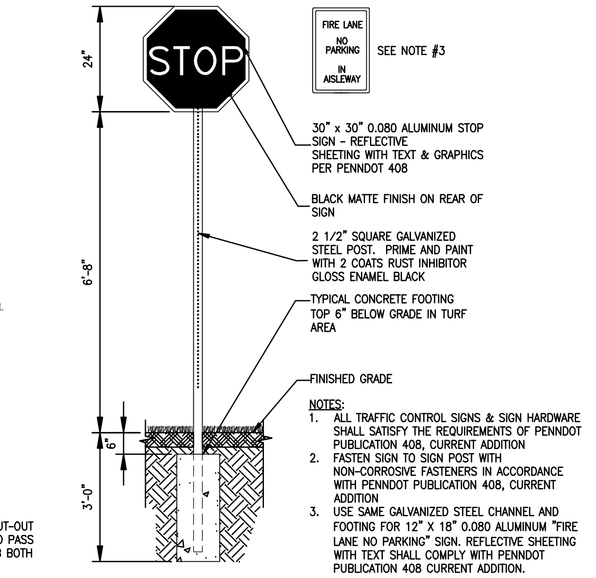

2 Traffic 'Stop Sign' Post

SCALE: N.T.S. — ELEVATION

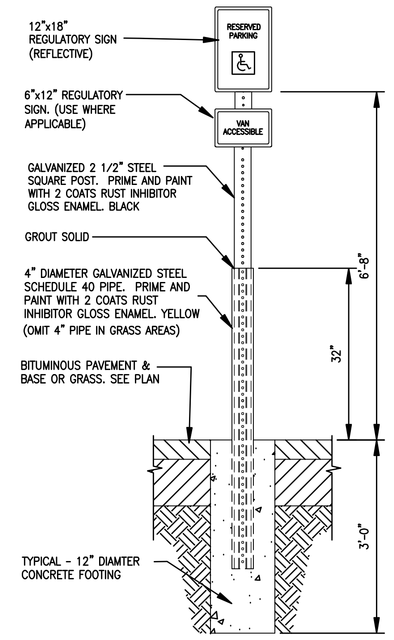

3 ADA Parking Sign

SCALE: N.T.S. — ELEVATION

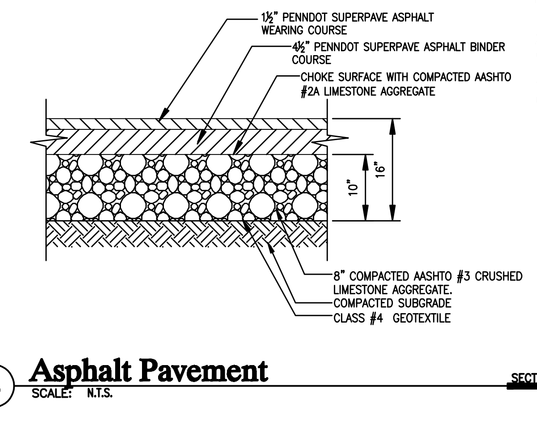

4 Asphalt Pavement

SCALE: N.T.S. — SECTION

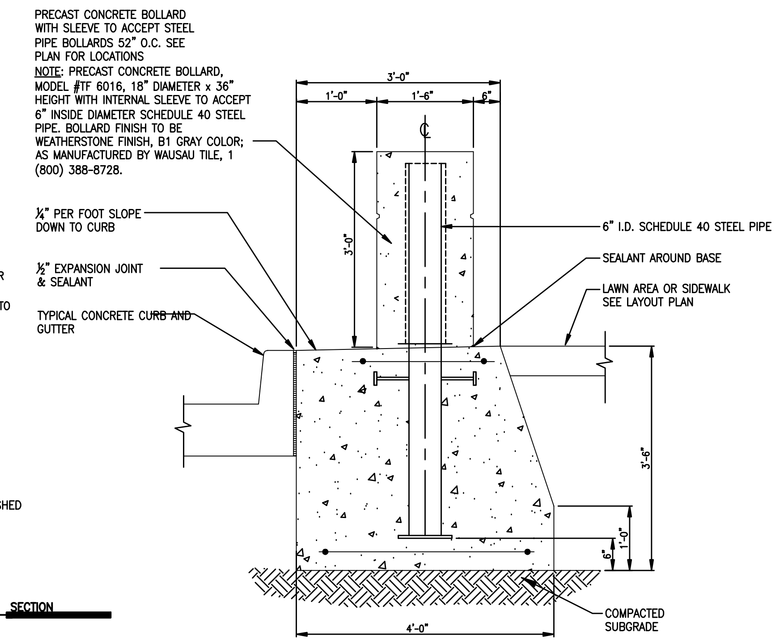

5 Pre-Cast Conc. Bollard (K4 Rating)

SCALE: NTS — SECTION

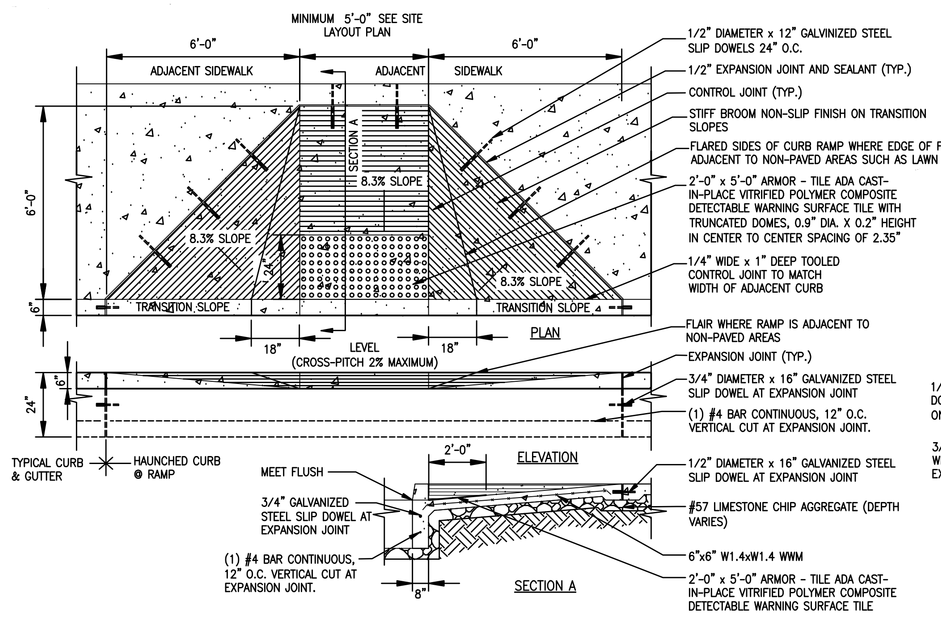

6 Flared Concrete Curb Ramp

SCALE: 3/8"=1'-0" — PLAN, ELEVATION, SECTION

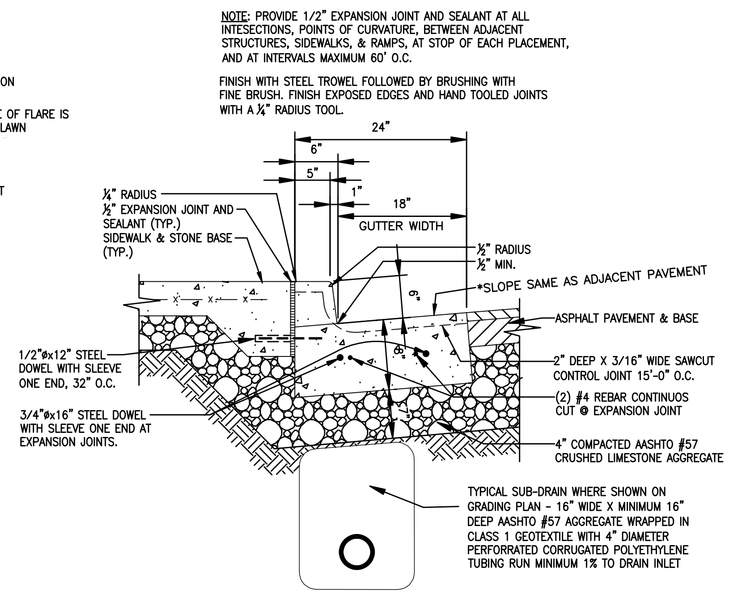

7 Sidewalk at Typ. Concrete Curb/Gutter

SCALE: N.T.S. — SECTION

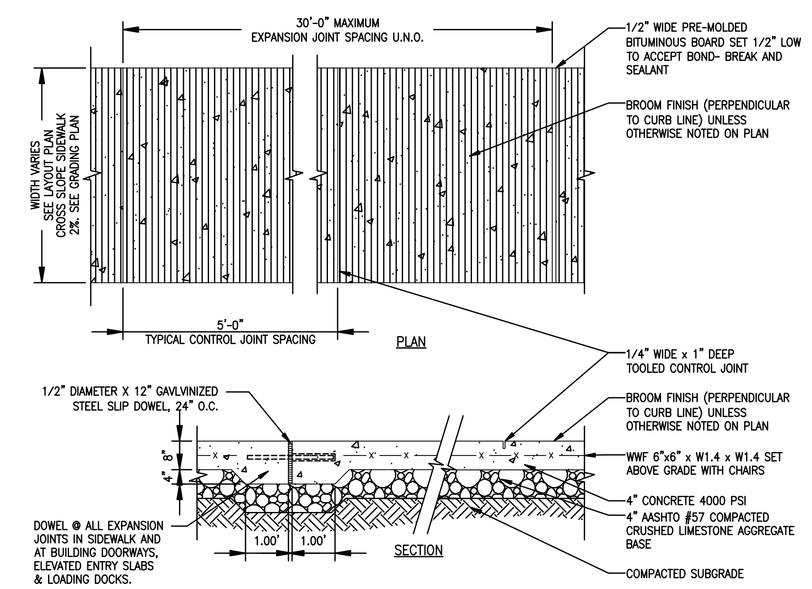

8 Concrete Sidewalk

SCALE: 1"=1'-0" — PLAN, SECTION

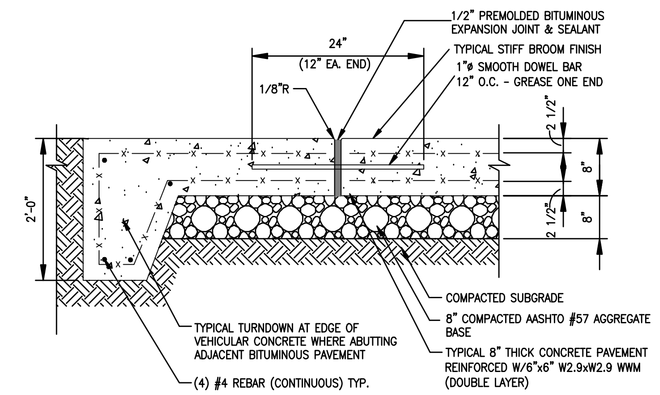

9 Heavy - Duty Conc. Pavement

SCALE: — SECTION

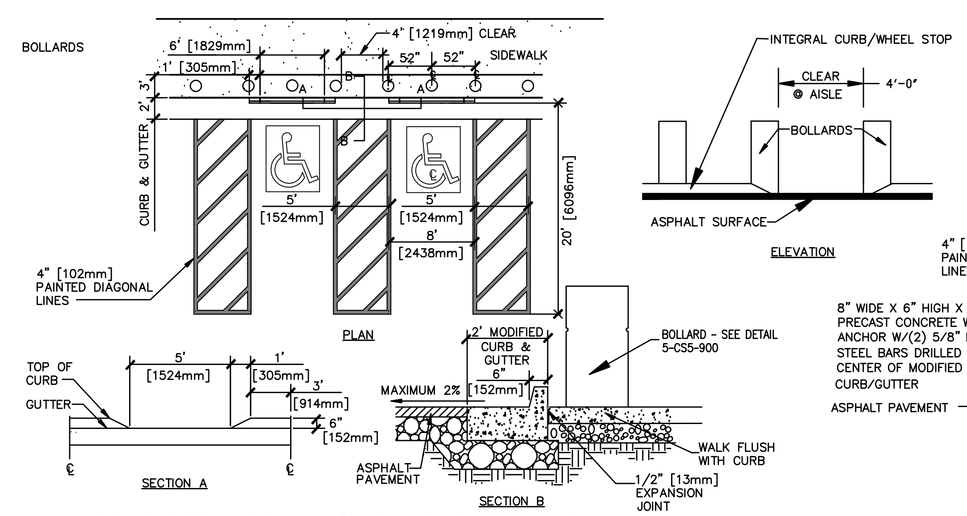

10 Curb-Wheel Stop @ ADA Parking Space

SCALE: N.T.S. — Plan

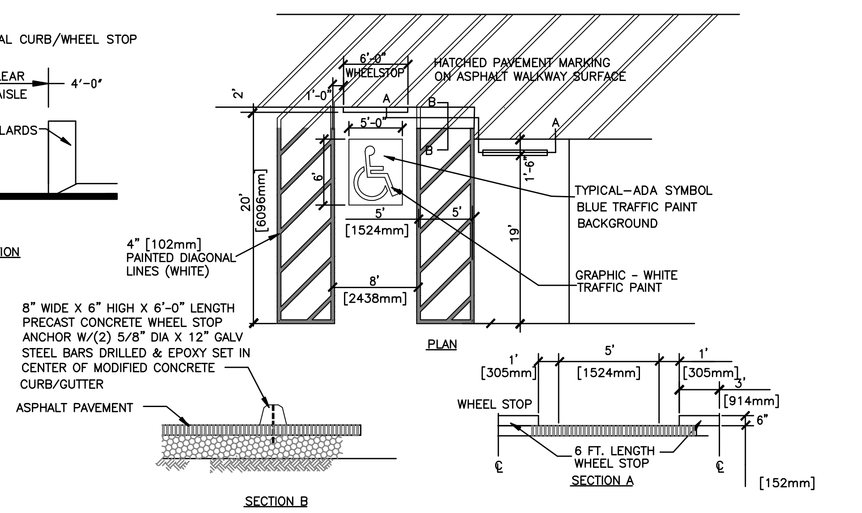

11 Pre-cast Wheel Stop @ ADA Parking Spaces

SCALE: N.T.S. — Plan

NO CURB AND GUTTER

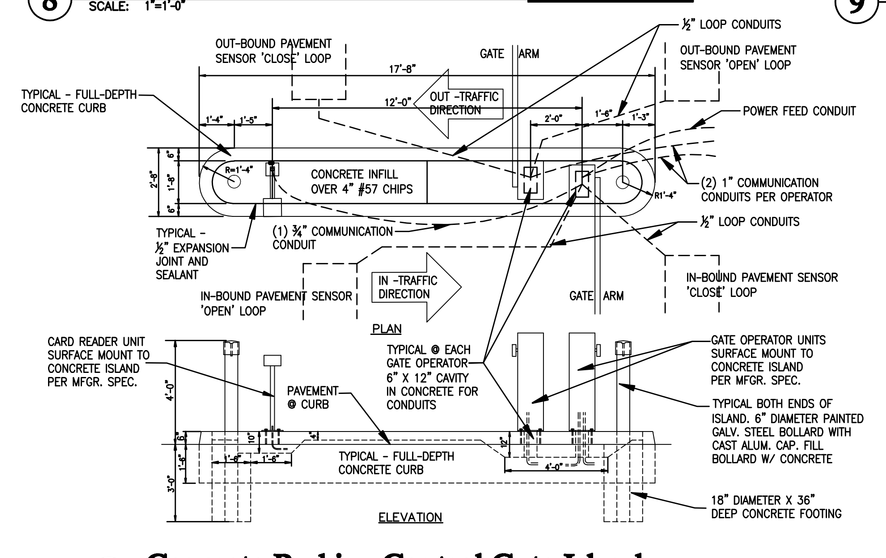

12 Concrete Parking Control Gate Island

SCALE: N.T.S. — Plan & Elevation

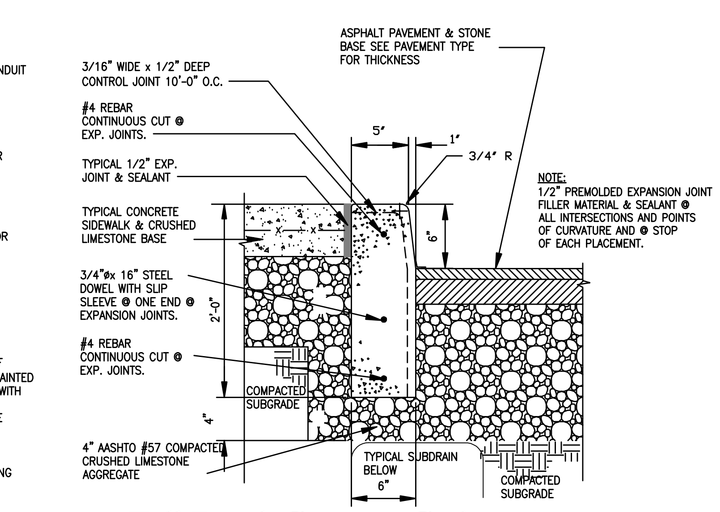

13 Full-Depth Concrete Curb

SCALE: N.T.S. — Section

FOR CONSTRUCTION
FULLY SPRINKLERED

Revisions:	Date

CONSULTANTS:

HDR

HDR Architect-eg, Inc.

1101 King Street | Suite 400 | Alexandria, Virginia 22314-2944 | 703.518.8600

ARCHITECT/ENGINEERS:

ARCHITECTURE ENGINEERING INTERIOR DESIGN DESIGN/BUILD

ASTORINO

227 First Pitt Boulevard Pittsburgh Pennsylvania 15222
TEL 412.765.1700 FAX 412.765.1711 www.astorino.com

Drawing Title	Site Details
Approved: Project Director	
Project Title	VA CARES CONSOLIDATION VAMC, PITTSBURGH, PA RESEARCH OFFICE BLDG.
Project Number	0-000-00000
Building Number	00
Location	VAMC UNIVERSITY DRIVE
Drawing Number	CS5-900
Date	08-18-2010
Checked	MED
Drawn	MED
Dwg.	- of -

Office of Facilities Management

Department of Veterans Affairs

VA FORM 08-6231, OCT 1978

P:\Project\20054250.00\CAD\UNIVERSITY DRIVE\Research Office Building\Sht\CS5-900.dwg MDAMICO 08/16/10 ; 10:21:24

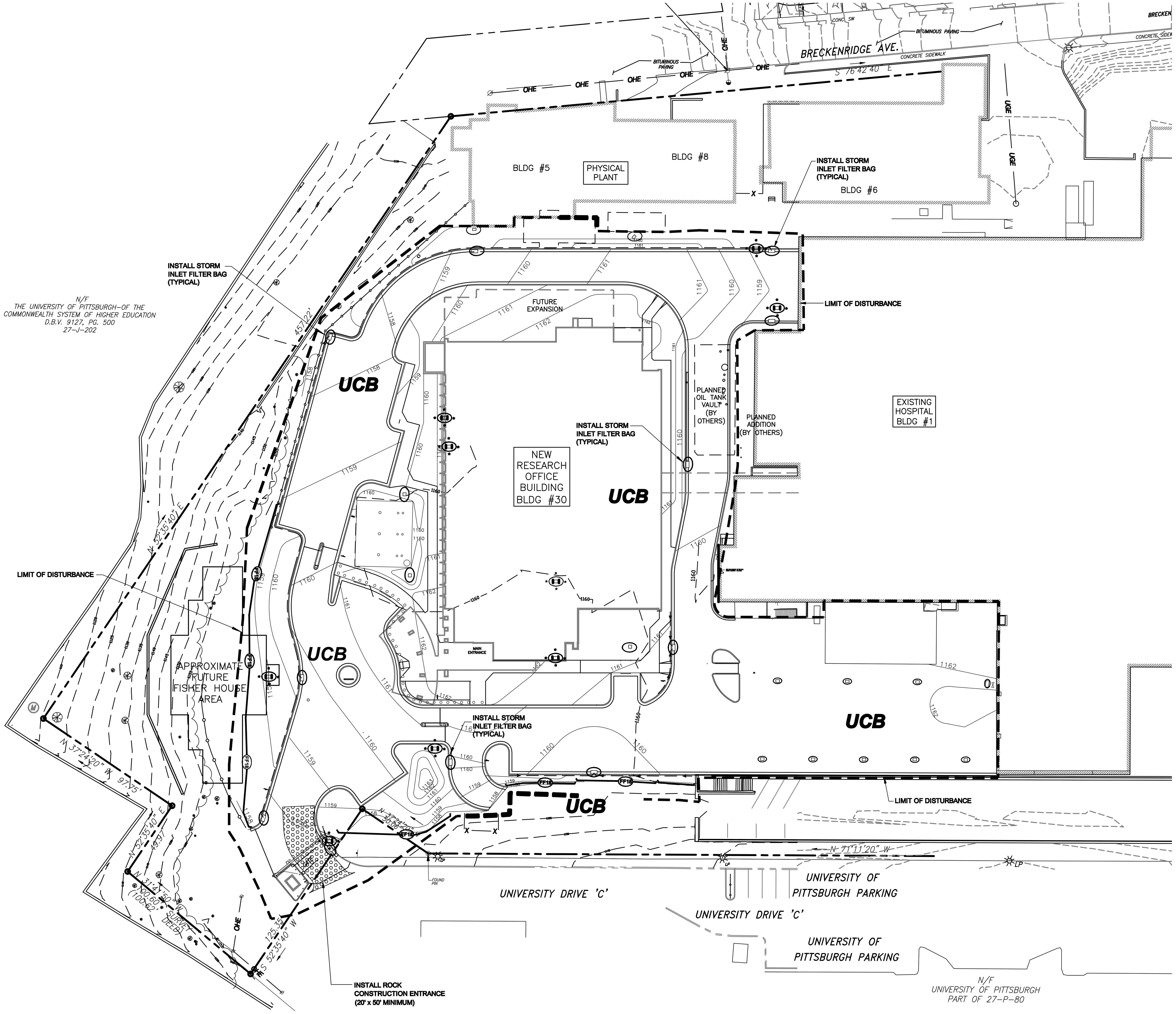

1 Site Erosion & Sedimentation Plan
SCALE: 1" = 30'

E&S LEGEND

- 18" FILTER FABRIC FENCE
- 30" FILTER FABRIC FENCE
- FILTER BAG INLET PROTECTION
- LIMIT OF DISTURBANCE
- SOIL IDENTIFICATION SYMBOL — UCB
- SOIL BOUNDARY LINE
- EXISTING CONTOURS
- PROPOSED CONTOURS
- ROCK CONSTRUCTION ENTRANCE
- FILTER BAG INLET PROTECTION AT EXISTING INLET UNTIL INLET IS REMOVED

Legend

- TC - TOP OF CURB
- BC - BOTTOM OF CURB
- SS - SANITARY/COMBINED SEWER
- CS - COMBINED SEWER MH
- ST - STORM
- MH - MANHOLE
- TOP - TOP OF CASTING
- INV - INVERT ELEVATION
- WV - WATER VALVE
- GV - GAS VALVE
- FH - FIRE HYDRANT
- BM - BENCH MARK
- PM - PARKING METER
- MB - MAILBOX
- FP - FLAG POLE
- LP - LIGHT POLE
- DLC - DUQUENSE LIGHT COMPANY
- TS - TRAFFIC SIGNAL
- CNO - COULD NOT OPEN
- ℞ - PROPERTY LINE
- BT - BELL TELEPHONE
- PP - POWER POLE
- TW - TOP OF WALL @ GRADE
- BW - BOTTOM OF WALL @ GRADE
- TG - TOP OF GRATE
- TC - TERRA COTTA PIPE (WHERE SHOWN NEXT TO SEWER LINE

EXISTING

- EX PROPERTY LINE
- EX. RIGHT OF WAY LINE
- EX. EASEMENT
- EX. CONTOURS
- EX. GAS LINE
- EX. UNDERGROUND ELECTRIC LINE
- EX. AERIAL ELECTRIC/ TELEPHONE/CABLE TV
- EX. SANITARY SEWER (BY PLAN)
- EX. SANITARY SEWER (FIELD)
- EX. STORM SEWER
- EX. WATERLINE BY PLAN
- EX. FIRE HYDRANT
- EX. FENCE
- EX. BOLLARD/POST
- EX. SIGN
- EX. LIGHT POLE
- EX. UTILITY POLE
- EX. GUY ANCHOR/WIRE
- EX. GAS VALVE
- EX. TREES
- EX. WATER VALVE
- EX. GAS METER
- EX. SPOT ELEVATION
- EX. (TYPE W) INLET
- EX. (TYPE M) INLET
- EX. MANHOLE
- EX. YARD DRAIN
- EX. FLAG POLE
- LIMIT OF WORK LINE
- GUIDERAIL

PROPOSED

- PROPOSED FENCE
- PROPOSED SPOT ELEVATION
- PROPOSED CONTOURS
- PROPOSED INLET
- PROPOSED MANHOLE
- PROPOSED COORDINATE POINT
- PROPOSED UTILITY POLE
- PROPOSED SIGN
- PROPOSED LIGHT POLE
- PROPOSED STORM SEWER
- SIDEWALK CONTROL JOINT
- SIDEWALK EXPANSION JOINT
- BITUMINOUS PAVEMENT
- HEAVY DUTY VEHICULAR CONCRETE PAVEMENT
- CONCRETE CURB & GUTTER
- CONCRETE CURB
- CHAIN LINK FENCE
- PAVEMENT SUBDRAIN
- GUIDERAIL

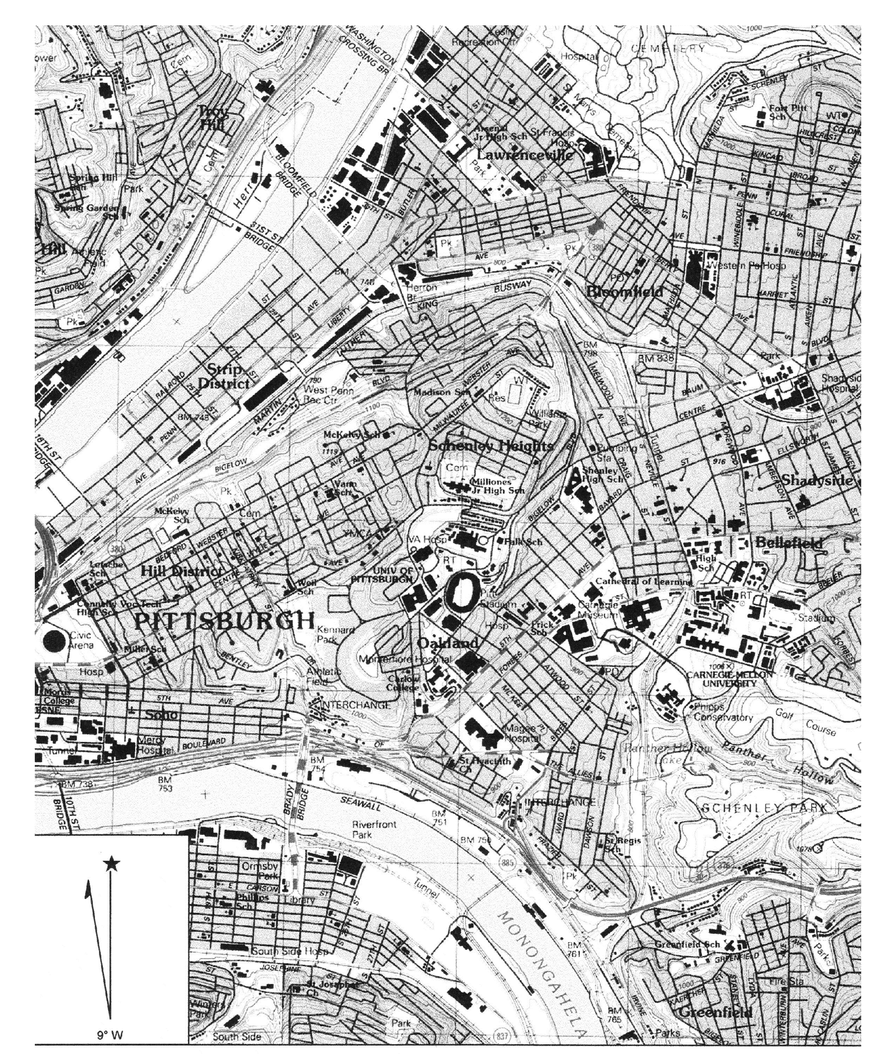

Name: PITTSBURGH EAST
Date: 4/6/2009

Location: 040° 26' 50.2" N 079° 57' 47.9" W
Caption: VA Cares Consolidation
Building 30

NOTE: THE UTILITY LOCATIONS SHOWN ON THIS PLAN ARE APPROX. LOCATIONS ONLY AS PER UTILITY COMPANY INFORMATION AND INFORMATION SUPPLIED BY THE PA ONE CALL SYSTEM.

SERIAL # 20102280550

Design:

*BEFORE YOU DIG ANYWHERE IN PENNSYLVANIA STOP! CALL PA. ONE-CALL AT 1-800-242-1776 TOLL FREE FOR ACTUAL FIELD UTILITY LOCATIONS.

PENNSYLVANIA ACT 38 (1991) REQUIRES NO LESS THAN 3 WORKING DAYS NOTICE NOR MORE THAN 10 WORKING DAYS NOTICE FROM EXCAVATORS WHO ARE ABOUT TO DIG, DRILL, BLAST, AUGER, BORE, GRADE, TRENCH, OR DEMOLISH WHEN IN THE CONSTRUCTION PHASE. A DESIGNER IS REQUIRED TO GIVE NO LESS THAN 10 WORKING DAYS NOR MORE THAN 90 WORKING DAYS NOTICE WHEN ENGAGED IN THE DESIGN PHASE. BOTH OF THESE CONDITIONS INVOLVE THE ENTIRE COMMONWEALTH.

PENNSYLVANIA ONE CALL SYSTEM, INC. 1-800-242-1776 STOP-CALL BEFORE YOU DIG!

BLDG NORTH
NORTH

30 15 0 30 60
SCALE: 1" = 30'

FOR CONSTRUCTION
FULLY SPRINKLERED

Revisions: | Date

CONSULTANTS:

HDR
HDR Architecture, Inc.
1101 King Street | Suite 400 | Alexandria, Virginia 22314-2944 | 703.518.8500

PREPARED BY
KAG ENGINEERING, INC.
2704 BROWNSVILLE ROAD
PITTSBURGH, PA 15227

ARCHITECT/ENGINEERS:

ARCHITECTURE
ENGINEERING
INTERIOR DESIGN
DESIGN/BUILD
ASTORINO
227 Fort Pitt Boulevard Pittsburgh Pennsylvania 15222
TEL 412 765 1700 FAX 412 765 1711 www.astorino.com

Drawing Title
Site Erosion & Sedimentation Plan

Approved: Project Director

Project Title
VA CARES CONSOLIDATION VAMC, PITTSBURGH, PA RESEARCH OFFICE BLDG.

Location
VAPHS UNIVERSITY DRIVE

Date: 06-18-2010 | Checked: KAG | Drawn: KAG

Project Number

Building Number
30

Drawing Number
CS6-000
Dwg. – of –

Office of Facilities Management

Department of Veterans Affairs

VA FORM 08-6231, OCT 1978

P:\Project\2005425.00\CAD\UNIVERSITY DRIVE\Research Office Building\Site\CS6-000.dwg MDAMICO 08/16/10 ; 10:29:21

102.5(7) – The staging of earthmoving activities.

A. Install the Rock Construction Entrance.

B. Mobilize equipment to site. Delineate project boundary limits, clearly mark all pertinent features in the field.

C. Install silt fence at all location identified on the construction drawings. Note: Placement of filter fabric fencing may not be limited to these areas. Silt fencing may be used in combination with seeding/mulching to stabilize areas disturbed by unforeseen construction.

D. Silt fence shall be installed prior to any construction activities. Silt fence shall be installed temporarily along toe of slope adjacent to trenches as required to filter run-off from exposed fill slope.

E. After BMP's are installed and functioning properly, demolition of the construction area may begin.

F. Install storm sewers. Install storm inlet filter bags in each catch basin upon completion.

1. Construction Requirements

   a. Limit advance clearing and grubbing operations to a distance equal to two times the length of pipe installation that can be completed in one day.

   b. Work crews and equipment for trenching, placement of pipe, plug construction and backfilling will be self contained and separate from clearing and grubbing and site restoration and stabilization operations.

   c. Limit daily trench excavation to the length of pipe placement, plug installation and backfilling that can be completed the same day.

   d. On the day following pipe placement and trench backfilling, the disturbed area will be graded to final contours and appropriate temporary erosion and sediment pollution control measures/facilities will be installed. Seeding and mulching of all disturbed areas will be done at the end of each week.

2. Exceptions – In certain cases trenches cannot be backfilled until the pipe is hydrostatically tested, or anchors and other permanent features are installed. In these cases, all of the requirements listed under item 2 will remain in effect with the following exceptions:

   a. Daily backfilling of the trench may be delayed for six days. All pressure testing and the complete backfilling of the open trench must be completed by the seventh working day.

   b. If daily backfilling is delayed, the disturbed area will be graded to final contours, appropriate temporary erosion and sediment control measures/facilities will be installed, and the areas seeded and mulched within the next two calendar days.

G. Rough grade the road and begin excavation on the proposed Research Office Building.

H. Start construction of the building.

I. Fine grade and pave parking area as indicated on plan.

J. Seed all disturbed areas within two work days after work ceases, using seeding requirements. If these areas are not stabilized within the next twenty (20) days, reseed promptly.

K. Upon stabilization (uniform 70% perennial vegetative cover) remove the temporary erosion and sediment pollution control measures, (inlet silt sacks, filter fence, and rock construction entrances.) Seed all disturbed areas within 2 days after work ceases using permanent seeding requirements. If these areas are not stabilized within (20) days, reseed promptly.

L. See Landscape Plan, Drawing LS1-000 for planting requirements.

102.5(10) – A maintenance program which provides for inspection of BMP's on a weekly basis and after each measurable rainfall event, including the repair of BMP's to ensure an efficient operation.

MAINTENANCE SCHEDULE

All erosion and sedimentation control devices will be inspected weekly and after every runoff event. The VA Hospital will be responsible for all maintenance of BMP's. Repairs and maintenance will be performed immediately to maintain the integrity of the measures and facilities. Specific maintenance programs for the filter fabric fence, rock construction entrance, and storm inlet filter bags are described below:

Filter Fabric Fence. The fence installation will be inspected after every precipitation event. Accumulated sediments will be removed when accumulation reach « of the height of the fence. All undercutting or erosion of the toe anchor will be repaired immediately with a rock filter outlet. Manufacturers' recommendation for replacing filter fabric fence due to weathering will be followed. Broken or leaning posts will be reset and guyed if necessary.

Rock Construction Entrance. The structure's thickness will be constantly maintained to the specified dimension by adding rock. A stockpile of rock materials will be maintained on the site for this purpose. At the end of each construction day, sediment deposited on public roadways will be removed and returned to the construction site. Public roadways will not be washed with water.

Storm Inlet Filter Bags. The filter bag will be inspected after every runoff event and on a weekly basis. Accumulated sediments will be removed as required to keep it functional: deposits will be removed when accumulations reach 1/3 of the height of the filter bag.

Seeding. Seed all disturbed areas within two (2) days after reaching final grade using permanent seeding requirements. If these areas are not stabilized within twenty (20) days, reseed promptly. If any areas remains idle for a period of twenty (20) days it must be temporarily stabilized.

Method of Disposal. When cleaning out erosion and sediment pollution control measures, place sediment on topsoil stockpile. Reseed topsoil stockpile immediately with temporary seeding requirements.

102.5(11) – Procedures which ensure that the proper measures for the recycling or disposal of material associated with or from the project side will be undertaken in accordance with Department regulations.

Individuals responsible for earth disturbance activities must ensure that proper mechanisms are in place to control wastewater materials. Construction wastes include, but are not limited to, excess soil materials building materials, concrete wash water, sanitary wastes, etc. that could adversely impact water quality. Measure should be planned and implemented for housekeeping, materials' management, and litter control. The Contractor is responsible to recycle waste materials, where feasible. The Contractor is required to get approval by Allegheny County Conservation District for any offsite waste/borrow area in the event it becomes necessary.

Rock Construction Entrance

General: Rock construction will be built at all locations where the contractor will access the construction site from any paved road, public or private. Contractor will utilize the rock construction whenever any vehicle leaves an unimproved area onto a paved road.

Design Standards:

a. Rock construction entrances will be constructed to the minimum width and thickness dimensions as shown in detail.
b. Rock will be AASHTO No.1 as specified in Section 703.2 of the PA DOT Publication 408.
c. For installation on clayey or poorly drained soils, a geotextile fabric underlayment of a type recommended for such applications by the manufacturer, will be used.

Maintenance:

The structure's thickness will be constantly maintained to the specified dimensions by adding rock. A stockpile of rock material will be maintained on the site for this purpose. At the end of each construction day, all sediment deposited on the roadways will be removed and returned to the construction site. Washing the roadway with water is not permitted.

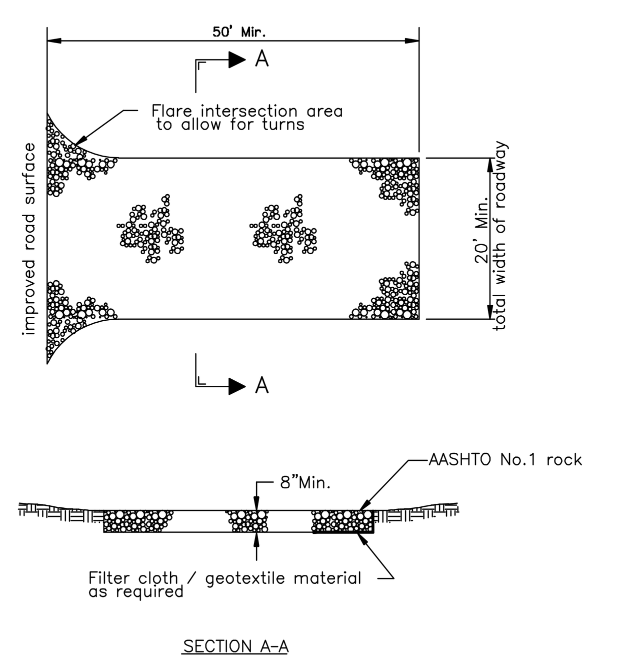

Rock Construction Entrance Detail
N.T.S.

STANDARD CONSTRUCTION DETAIL #28a
Filter Bag Inlet Protection
Channel or Roadside Swale

Storm Inlet Filter Bag

Maintenance:

Storm Inlet Filter Bags shall be inspected weekly and after every runoff event. Any torn or damaged bag shall be replaced by end of work day. Filter Bags shall be emptied when 1/3 full, with the debris properly disposed of by the contractor at the Contractor's dump site.

* Use Low Flow Filter Bags

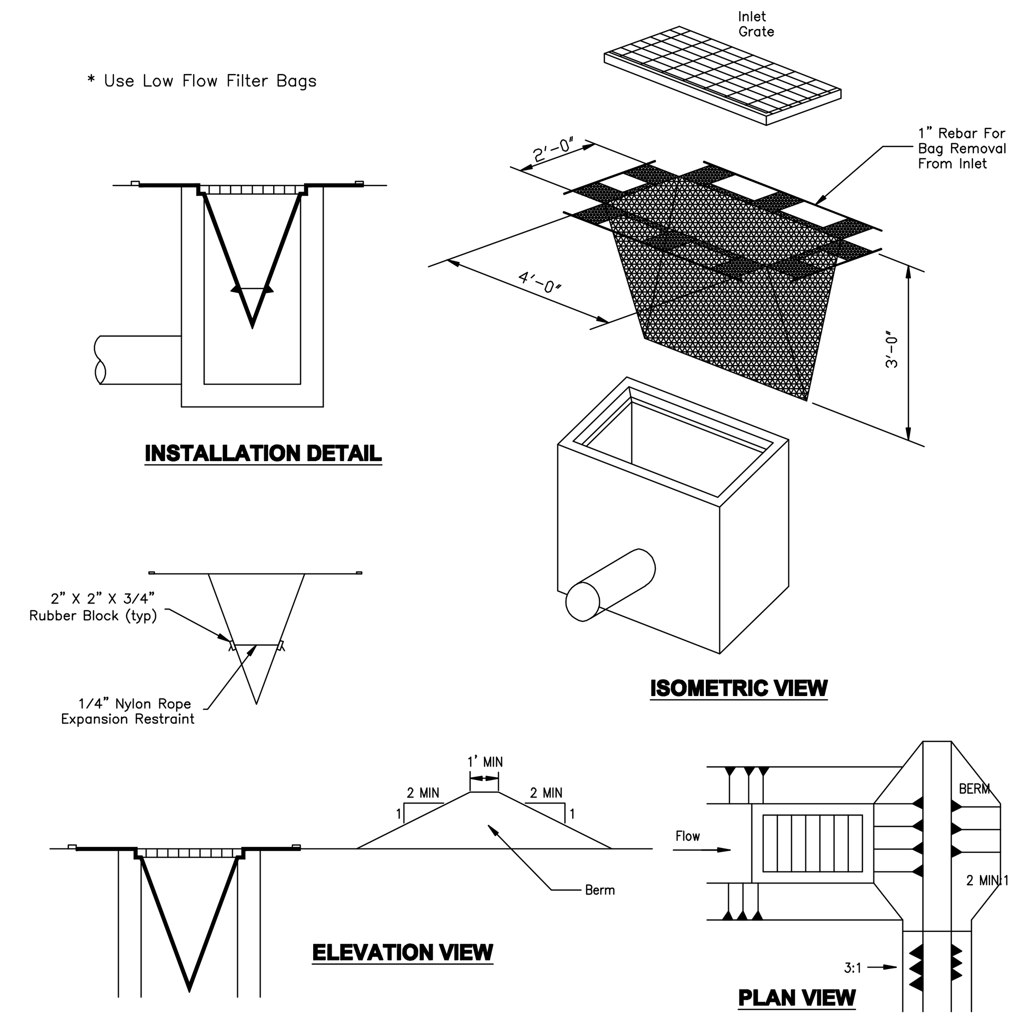

Maximum Drainage Area = 1/2 acre.

Inlet protection is not required for inlet tributary to sediment basin or trap. Berms required for all installations.

Earthen berm in roadway shall be maintained until roadway is stoned. Road subbase berm on roadway shall be maintained until roadway is paved. Earthen berm in channel shall be maintained until permanent stabilization is completed or to remain permanently.

DO NOT USE ON MAJOR PAVED ROADWAYS WHERE PONDING MAY CAUSE TRAFFIC HAZARDS

Method Of Placing Cut & Fill To Minimize Soil Erosion
NTS

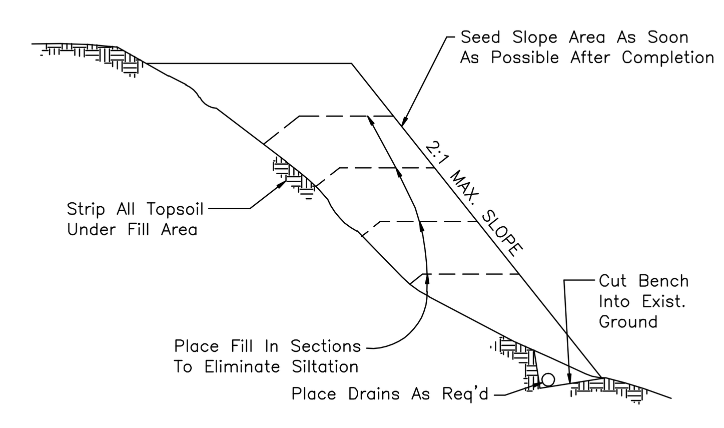

Note: Seeding In disturbed areas shall be In accordance with permanent seeding requirements.

Note: Fill slopes shall be seeded and mulched in 10' increments

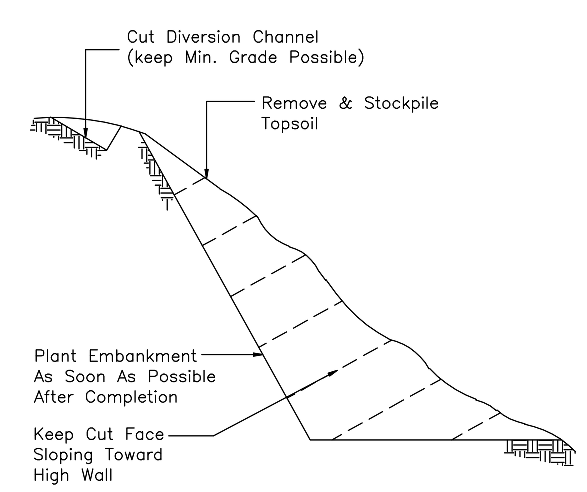

Silt Fence

Design Standards/Restrictions:

a. Silt Fence will be placed at level grade. Both ends of a fence section will be extended up the slope so that the bottom of the fence shall end at the top of the fence elevation.

b. Silt fences will be designed to control runoff from drainage areas that do not exceed the maximum slope to slope length relationship as shown in TABLE C.

c. 18" high fence shall be installed according to the STANDARD SILT FENCE DETAILS. Any fence greater than 18" high, may be installed according to the details shown, as long as the maximum slope lengths for 18" high fence are observed.

d. 30" high fence, or any fence installed on uncompacted fills or extremely loose undisturbed soils, will be constructed according to the SILT FENCE DETAILS.

e. The formation of concentrated flows on the drainage slope above a silt fence installation is not permitted. If concentrated flows do occur, direct slope stabilization measures must be employed to prevent such conditions.

f. Silt fences will not be placed in any area of concentrated flows such as ditches, swales, channels, etc..

g. Silt fences will not be used in areas where rock or rocky soils prevent full and uniform anchoring of the fence toe.

h. Silt fence material will not be placed across the entrance to pipes or culverts and will not be wrapped around the principal spillway structures of sediment traps or basins.

Installation:

a. A trench will be plowed or otherwise excavated to the required depth (see STANDARD SILT FENCE DETAILS) with little, if any disturbance to the downslope side of the trench. The bottom of the trench and the fence top will be placed on a level grade. When it is necessary to cross small depressions, the trench bottom and fence top edge may deviate slightly from the level grade. Grades in such sections will not exceed one percent (1%), nor will the deviation extend for more than 25 feet.

b. Support stakes will be driven to the required depth below the existing ground at specified intervals.

c. Stretch and fasten fabric to the upslope side of the support stakes (if a reinforced section, fasten reinforcement mesh prior to fastening the fabric).

d. Where ends of the fabric come together, they will be overlapped, folded and stapled to prevent sediment bypass.

e. The toe anchor will be backfilled and compacted to a density equal to the surrounding soils.

f. If constructing a reinforced section, attach guy wires to support stakes. Provisions should be made for easy loosening and removal of the guy wires to allow for access to perform maintenance work.

Maintenance:

a. The fence installation should be inspected after every precipitation event. Any necessary repairs will be made by end of work day.

b. Accumulated sediments will be removed as required to keep the fence functional. In all cases remove deposits where accumulations reach 1/2 the above ground height of the fence.

c. All undercutting or erosion of the toe anchor will be repaired by end of work day with compacted backfill materials.

d. Adhere to any manufacturer's recommendations for replacing silt fence due to weathering.

TABLE C Maximum Slope Lengths for Filter Fabric Fences

Slope – Percent	Maximum Slope Length (ft) Above Fences	
	18" High Fence	30" High Fence
2 (or less)	150	500
5	100	250
10	50	150
15	35	100
20	25	70
25	20	55
30	15	45
35	15	40
40	15	35
45	10	30
50	10	25

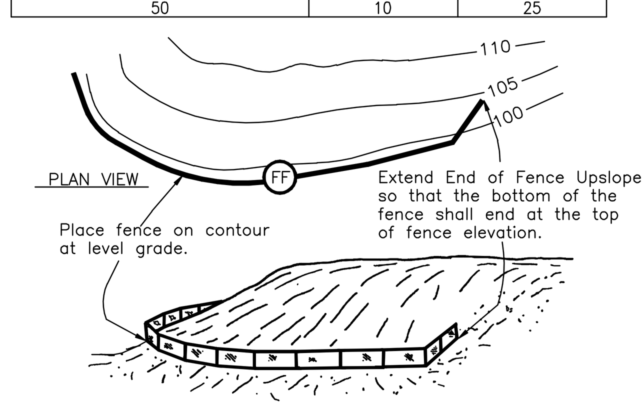

Illustration Filter Fabric Fence Detail
N.T.S.

STANDARD 18" MAX. FENCE HEIGHT

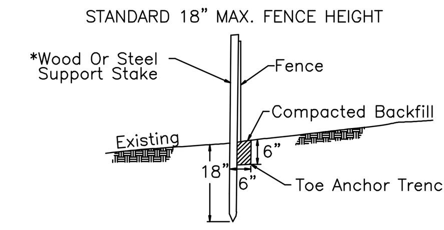

* Spacing Of Support Stakes @ 8' Max.

Standard 18" Silt Fence Detail
N.T.S.

REINFORCED SECTION 30" MAX. FENCE HEIGHT

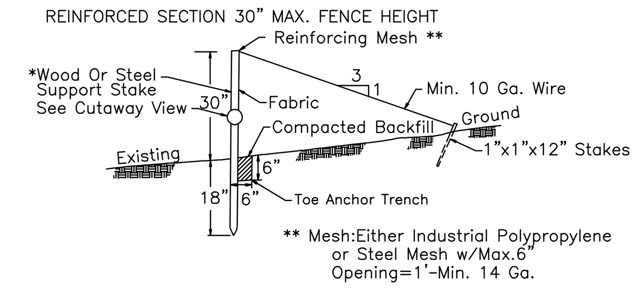

** Mesh:Either Industrial Polypropylene or Steel Mesh w/Max.6" Opening=1'-Min. 14 Ga.

* Spacing Of Support Stakes @ 8' Max.

Standard 30" Silt Fence Detail
N.T.S.

JOINING FENCE SECTIONS

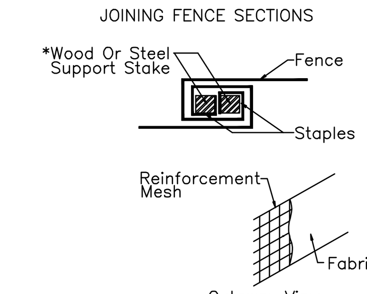

* 2"x 2" Stake is Actual Size not Nominal

SPECIFICATIONS: The Department recommends the use of the Penn State publication "Erosion Control; & Conservation Plantings on Noncropland" as the standard to use for the selection of species, seed specifications, mixtures, liming and fertilizing, time of seeding, and seeding methods. Specifications for these items may also be obtained from Penn DOT's Publication #408, Section 804 or by contacting the applicable county conservation district. Upon selection of a reference, That reference must be used to provide all specifications for seeding, mulching, and soil amendments. The following Specification will be used for this project:

INTERIM SURFACE STABILIZATION

To replace temporary or permanent seeding requirements during non-growing seasons of the year.

MULCH: Hay or Straw – Place uniformly, in a continuous blanket, at a minimum rate of 1,200 pounds per 1,000 square yards.

MULCH BINDER: Cut-back Asphalt – Uniformly not less than 31 gallons per 1,000 square yards.

Materials, Construction and Maintenance shall be in accordance with the specifications contained in Section 805, Penndot Publication 408.

TEMPORARY SEEDING REQUIREMENTS

All exposed areas of soil disturbed by rough grading (not to be fine-graded for periods from 30 days to one year) shall be seeded with the seed mix and at the rate noted below:

SPECIES: Annual Rye
% PURE LIVE SEED: 80%
APPLICATION RATE: 40 lbs/acre
FERTILIZER TYPE: 10-20-20
FERTILIZER APPL. RATE: 1000 lbs/acre
LIMING RATE: 6 tons per acre
MULCH TYPE: Hay or Straw
MULCHING RATE: 3 tons per acre

All seed shall be blue tag certified grade. Seedings made in fall or winter shall be mulched. Straw mulch shall be spread at the rate of 3 tons/acre or wood cellulose fiber mulch shall be applied at the rate of 1,500 lbs/acre.

PERMANENT SEEDING REQUIREMENTS

All exposed areas of soil disturbed by "rough grading" shall be seeded in accordance with Drawing LS1-000 amd Specifications.

STEEP SLOPE SEEDING REQUIREMENTS

SLOPES OVER 33%

All exposed slopes shall be seeded with the seed mix and at the rate noted below:

SPECIES: Birdsfoot Trefoil 80%
Kentucky 31 Tall Fescue
Redtop 20%
% PURE LIVE SEED: 80%
APPLICATION RATE: 35-10-3 lbs/acre
FERTILIZER TYPE: 10-20-20
FERTILIZER APPL. RATE: 1000 lbs/acre
LIMING RATE: 6 tons per acre
MULCH TYPE: Hay or Straw
MULCHING RATE: 3 tons per acre
ANCHOR MATERIAL: Cut-Back Asphalt
RATE OF ANCHOR MATERIAL APPL.: 31 Gal./1000 S.Y.
SEEDING SEASON DATES: Dec. 1

All seed shall be blue tag certified grade. Straw mulch shall be spread at the rate of 3 tons/Acre or wood cellulose fiber mulch shall be applied at the rate of 1200 lbs/Acre.

FOR CONSTRUCTION
FULLY SPRINKLERED

Revisions: | **Date**

CONSULTANTS:

HDR

HDR Architecture, Inc.

1101 King Street | Suite 400 | Alexandria, Virginia 22314-2944 | 703.518.8500

PREPARED BY
KAG ENGINEERING, INC.
2704 BROWNSVILLE ROAD
PITTSBURGH, PA 15227

ARCHITECT/ENGINEERS:

ARCHITECTURE
ENGINEERING
INTERIOR DESIGN
DESIGN/BUILD

ASTORINO

227 Fort Pitt Boulevard Pittsburgh Pennsylvania 15222
TEL 412 765 1700 FAX 412 765 1711 www astorino.com

Drawing Title
Site Erosion & Sedimentation Control Details

Approved: Project Director

Project Title
VA CARES CONSOLIDATION VAMC, PITTSBURGH, PA RESEARCH OFFICE BLDG.

Location
VAPHS UNIVERSITY DRIVE

Date **08-18-2010** | Checked **KAG** | Drawn **KAG**

Project Number **646CA2500R**

Building Number **30**

Drawing Number **CS6-900**

Dwg. – of –

Office of Facilities Management

Department of Veterans Affairs

VA FORM 08-6231, OCT 1978

three inches = one foot
one and one half inches = one foot
one inch = one foot
three quarters inch = one foot
one half inch = one foot
three eighths inch = one foot
one quarter inch = one foot
one eighth inch = one foot

P:\Project\2005425.00\CAD\UNIVERSITY DRIVE\Research Office Building\Site\CS6-900.dwg MDAMICO 08/16/10 ; 10:32:01

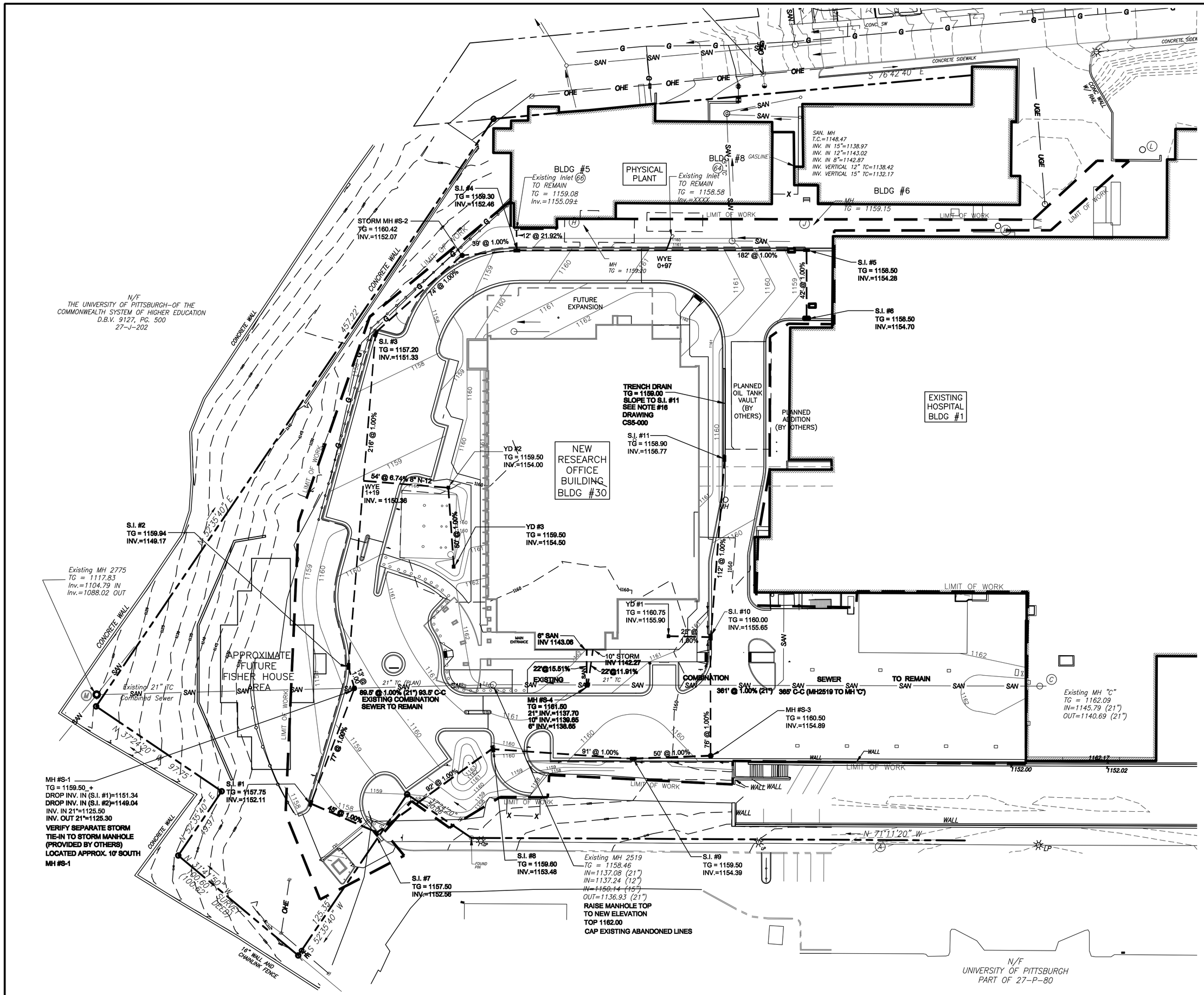

1 Site Storm & Sanitary Sewer Plan

SCALE: 1" = 30'

PROPOSED SANITARY SEWER	SAN
PROPOSED STORM SEWER	
PROPOSED MANHOLE	
PROPOSED YARD DRAIN	
PROPOSED INLET	
Existing Underground Electric	UGE
Existing Overhead Electric	OHE
Existing Underground Telephone	UGT
Existing Gasline	G
Existing Gas Valve	
Existing Waterline	W
Existing Water Valve	
Existing Fire Hydrant	
Existing Sanitary Sewer	
Existing Manhole	

Legend

TC	– TOP OF CURB
BC	– BOTTOM OF CURB
SS	– SANITARY/COMBINED SEWER
CS	– COMBINED SEWER MH
ST	– STORM
MH	– MANHOLE
TOP	– TOP OF CASTING
INV	– INVERT ELEVATION
WV	– WATER VALVE
GV	– GAS VALVE
FH	– FIRE HYDRANT
BM	– BENCH MARK
PM	– PARKING METER
MB	– MAILBOX
FP	– FLAG POLE
LP	– LIGHT POLE
DLC	– DUQUENSE LIGHT COMPANY
TS	– TRAFFIC SIGNAL
CNO	– COULD NOT OPEN
℞	– PROPERTY LINE
BT	– BELL TELEPHONE
PP	– POWER POLE
TW	– TOP OF WALL @ GRADE
BW	– BOTTOM OF WALL @ GRADE
TG	– TOP OF GRATE
TC	– TERRA COTTA PIPE (WHERE SHOWN NEXT TO SEWER LINE

EXISTING

	EX. PROPERTY LINE
	EX. RIGHT OF WAY LINE
	EX. EASEMENT
900	EX. CONTOURS
	EX. GAS LINE
UGE	EX. UNDERGROUND ELECTRIC LINE
OHE	EX. AERIAL ELECTRIC/ TELEPHONE/CABLE TV
SAN	EX. SANITARY SEWER (BY PLAN)
SAN	EX. SANITARY SEWER (FIELD)
	EX. STORM SEWER
W	EX. WATERLINE BY PLAN
	EX. FIRE HYDRANT
X — X — X — X	EX. FENCE
B	EX. BOLLARD/POST
	EX. SIGN
	EX. LIGHT POLE
	EX. UTILITY POLE
	EX. GUY ANCHOR/WIRE
	EX. GAS VALVE
	EX. TREES
	EX. WATER VALVE
	EX. GAS METER
908.8	EX. SPOT ELEVATION
G	EX. (TYPE W) INLET
	EX. (TYPE M) INLET
	EX. MANHOLE
	EX. YARD DRAIN
FP	EX. FLAG POLE
	LIMIT OF WORK LINE
	GUIDERAIL

PROPOSED

	– PROPOSED FENCE
908.8	– PROPOSED SPOT ELEVATION
908	– PROPOSED CONTOURS
	– PROPOSED INLET
	– PROPOSED MANHOLE
N 1000.00 E 1000.00	– PROPOSED COORDINATE POINT
	– PROPOSED UTILITY POLE
	– PROPOSED SIGN
	– PROPOSED LIGHT POLE
	– PROPOSED STORM SEWER
	– SIDEWALK CONTROL JOINT
	– SIDEWALK EXPANSION JOINT
	– BITUMINOUS PAVEMENT
	– HEAVY DUTY VEHICULAR CONCRETE PAVEMENT
	– CONCRETE CURB & GUTTER
	– CONCRETE CURB
	– CHAIN LINK FENCE
	– PAVEMENT SUBDRAIN
	– GUIDERAIL

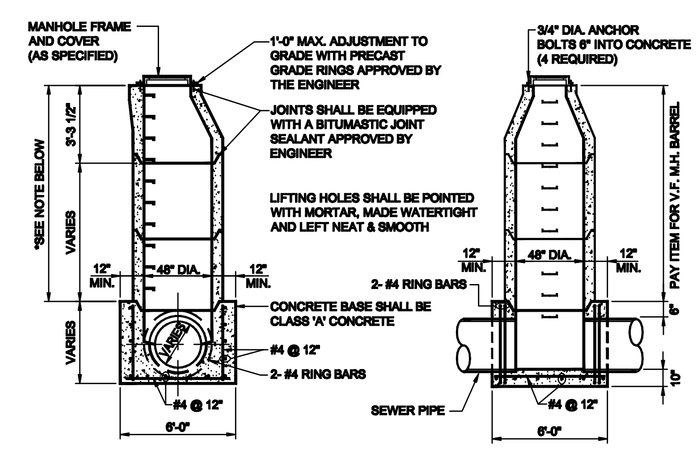

NOTES:

1. PRECAST CONCRETE MANHOLE SECTIONS SHALL CONFORM TO ASTM C-478, LATEST REVISION.
2. WHERE MANHOLE FOUNDATION IS IN ROCK, REINFORCEMENT WILL NOT BE REQUIRED.
3. WATERPROOF EXTERIOR SURFACE WITH TWO COATS BITUMASTIC MATERIAL OR COAL TAR SOLUTION. 8 MILS PER COAT.

MH#S-4 PRECAST CONCRETE MANHOLE FOR SEWERS 20" TO 33" (CAST-IN-PLACE BOTTOM)

NOTE: THE UTILITY LOCATIONS SHOWN ON THIS PLAN ARE APPROX. LOCATIONS ONLY AS PER UTILITY COMPANY INFORMATION AND INFORMATION SUPPLIED BY THE PA ONE CALL SYSTEM.

SERIAL # 20102280550

Design:

*BEFORE YOU DIG ANYWHERE IN PENNSYLVANIA STOP! CALL PA. ONE-CALL AT 1-800-242-1776 TOLL FREE FOR ACTUAL FIELD UTILITY LOCATIONS.

PENNSYLVANIA ACT 38 (1991) REQUIRES NO LESS THAN 3 WORKING DAYS NOTICE NOR MORE THAN 10 WORKING DAYS NOTICE FROM EXCAVATORS WHO ARE ABOUT TO DIG, DRILL, BLAST, AUGER, BORE, GRADE, TRENCH, OR DEMOLISH WHEN IN THE CONSTRUCTION PHASE. A DESIGNER IS REQUIRED TO GIVE NO LESS THAN 10 WORKING DAYS NOR MORE THAN 90 WORKING DAYS NOTICE WHEN ENGAGED IN THE DESIGN PHASE. BOTH OF THESE CONDITIONS INVOLVE THE ENTIRE COMMONWEALTH.

BLDG NORTH

30 15 0 30 60

SCALE: 1" = 30'

FOR CONSTRUCTION
FULLY SPRINKLERED

Revisions:	Date

CONSULTANTS:

HDR

HDR Architect-eg, Inc.

1101 King Street | Suite 400 | Alexandria, Virginia 22314-2944 | 703.518.8500

PREPARED BY
KAG ENGINEERING, INC.
2704 BROWNSVILLE ROAD
PITTSBURGH, PA 15227

ARCHITECT/ENGINEERS:

ARCHITECTURE
ENGINEERING
INTERIOR DESIGN
DESIGN/BUILD

ASTORINO

227 Fort Pitt Boulevard Pittsburgh Pennsylvania 15222
TEL 412 765 1700 FAX 412 765 1711 www.astorino.com

Drawing Title	Site Storm & Sanitary Sewer Plan
Approved: Project Director	
Project Title	VA GAERS CONSOLIDATION VAMC, PITTSBURGH, PA RESEARCH OFFICE BLDG.
Location	VAPHS UNIVERSITY DRIVE
Date	08-18-2010
Checked	KAG
Drawn	KAG
Project Number	0000A0000
Building Number	00
Drawing Number	CS7-000
Dwg. – of –	

Office of Facilities Management

Department of Veterans Affairs

VA FORM 08-6231, OCT 1978

P:\Project\2005425.00\CAD\UNIVERSITY DRIVE\Research Office Building\Site\CS7-000.dwg MIDAMICO 08/16/10 ; 10:37:30

P:\Project\2005425.00\CAD\UNIVERSITY DRIVE\Research Office Building\Site\CS7-900.dwg MDAMICO 08/16/10 ; 10:41:39

one eighth inch = one foot · one quarter inch = one foot · three eighths inch = one foot · one half inch = one foot · three quarters inch = one foot · one inch = one foot · one and one half inches = one foot · three inches = one foot

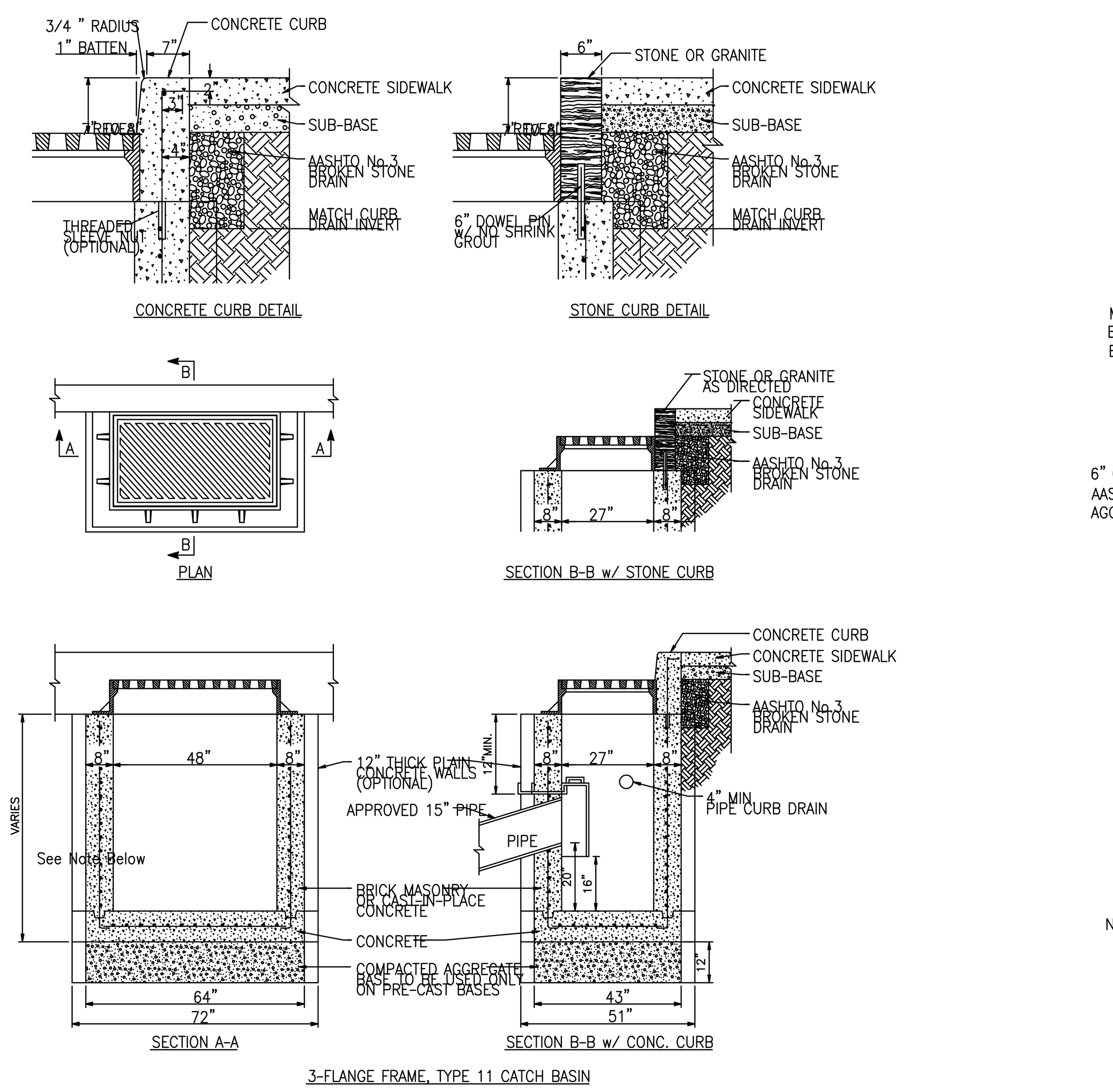

3-FLANGE FRAME, TYPE 11 CATCH BASIN

N.T.S.

NOTES:
1. STANDARD STORM INLET DEPTH IS 4' FROM BOX FLOOR TO TOP OF BOX WALL; STANDARD CATCH BASIN DEPTH IS 6' FROM BOX FLOOR TO TOP OF BOX WALL.
2. SEE SPECIFICATIONS FOR EXCAVATION, CONSTRUCTION AND BACKFILLING WITH GRAVEL-CEMENT MIXTURE.
3. CONCRETE FOR STORM INLET BASE SHALL BE CLASS P AND MIXED WITH HIGH EARLY STRENGTH SPECIAL CEMENT.
4. ALL OUTSIDE JOINTS TO BE STRUCK FLUSH.
5. INLET FRAME CASTING - EAST JORDON IRON WORKS CATALOG NO. 5357Z
6. INLET GRATE CASTING - EAST JORDON IRON WORKS CATALOG NO. 5355M1

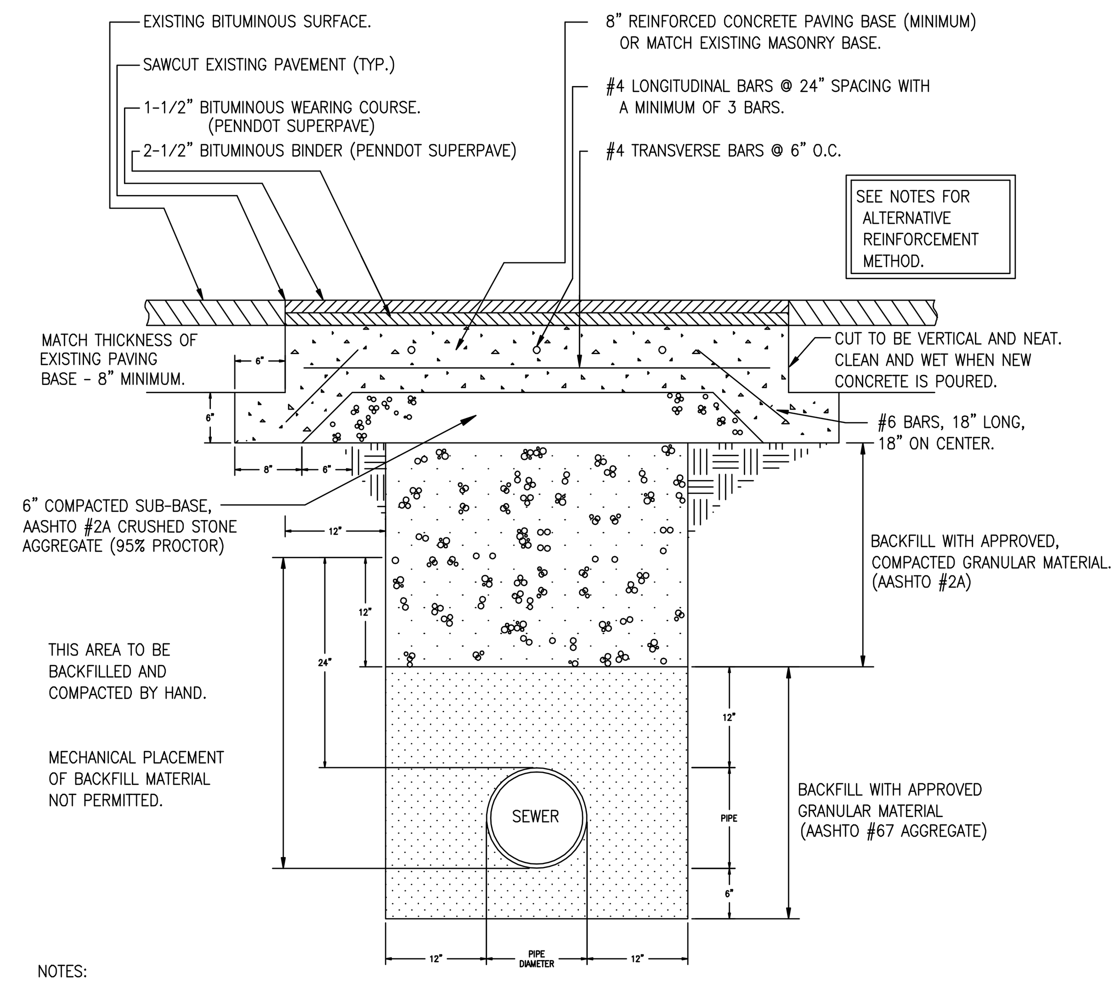

NOTES:
REINFORCEMENT SHALL BE CONSIDERED INCIDENTAL TO CONCRETE PAVING BASE.
UNDERPINNING METHOD WILL NOT BE USED IF IT WILL INTERFERE WITH SUB-BASE DRAINAGE. (SEE CITY OF PITTSBURGH STANDARD DRAWINGS ML 208-209, FOLDER M-18 AND ML 243, FOLDER M-18)
PAVING MATERIAL TO MATCH EXISTING STREET SURFACE.
ALL TRENCH MATERIAL IS TO BE PLACED AND MECHANICALLY COMPACTED IN 6" LAYERS.
OVEREXCAVATION OF UNDERPINNING SHALL BE REPLACED WITH CONCRETE; BACKFILLING WITH OTHER MATERIALS IS NOT ACCEPTABLE.
ALTERNATIVE REINFORCEMENT METHOD: WIRE FABRIC REINFORCEMENT MAY BE USED. SMOOTH WIRE (W), DEFORMED WIRE (D), OR A COMBINATION OF BOTH MAY BE USED. THE TRANSVERSE WIRES MAY BE ABOVE OR BELOW THE LONGITUDINAL WIRES. WIRE SIZE SHALL BE AS PER CHART:

PAV'T. DEPTH	MIN. LONG. WIRE SIZE	PAV'T. DEPTH	MIN. LONG. WIRE SIZE
8"	W5.5 OR D5	11"	W7.5 OR D7
9"	W6 OR D5.5	12"	W8 OR D7.5
10"	W7 OR D6.5	13"	W9 OR D8

REPAVING DETAIL APPLIES TO ALL SITE UTILITES

TRENCH AND REPAVING DETAIL

N.T.S.

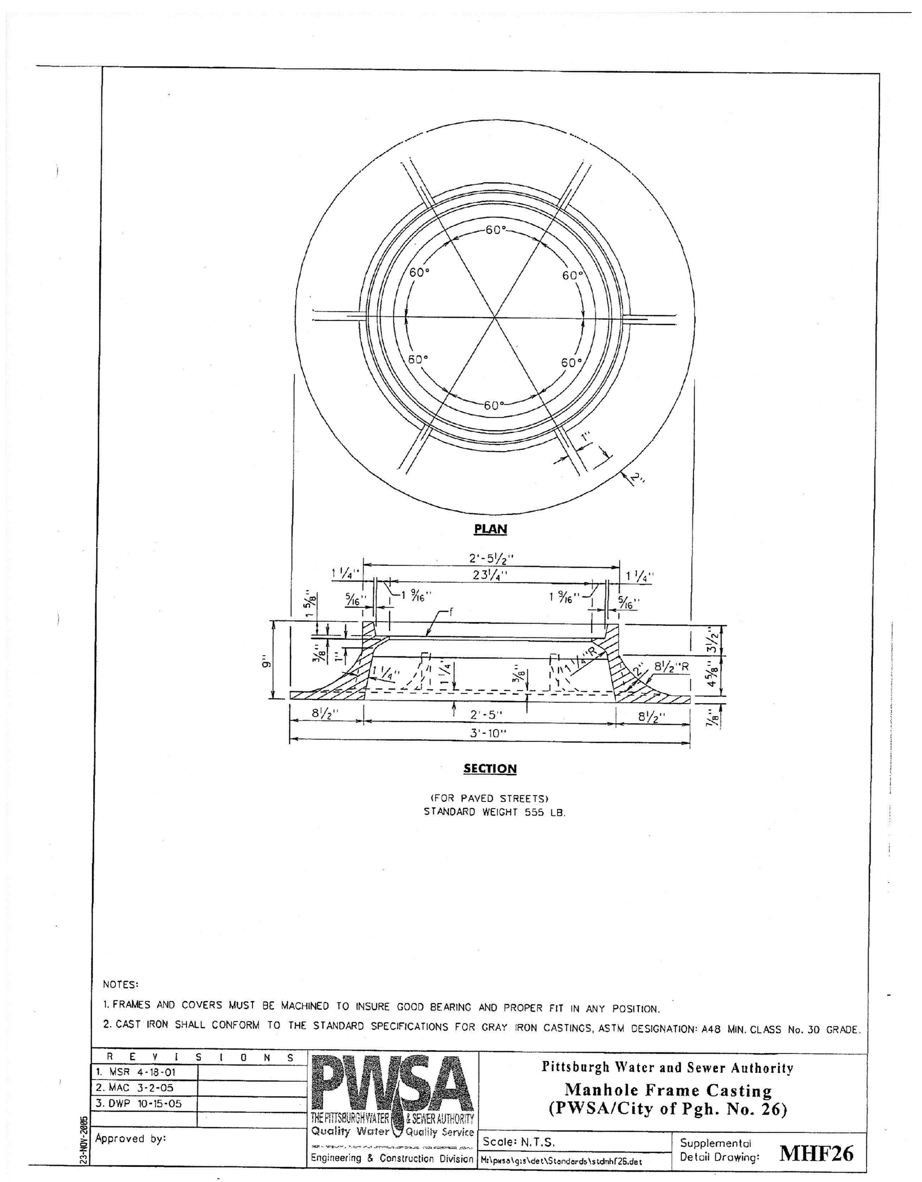

NOTES:
1. FRAMES AND COVERS MUST BE MACHINED TO INSURE GOOD BEARING AND PROPER FIT IN ANY POSITION.
2. CAST IRON SHALL CONFORM TO THE STANDARD SPECIFICATIONS FOR GRAY IRON CASTINGS, ASTM DESIGNATION: A48 MIN. CLASS No. 30 GRADE.

PWSA MANHOLE

N.T.S.

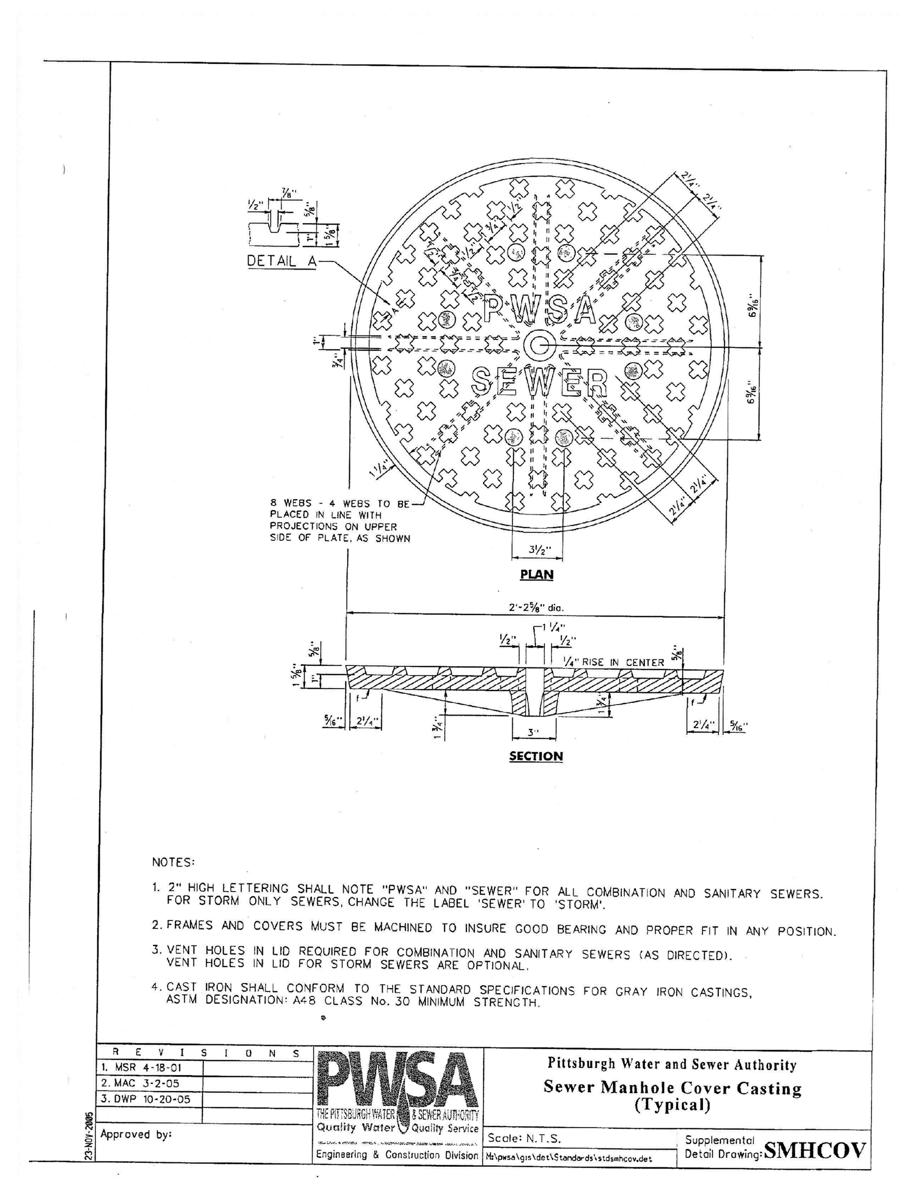

NOTES:
1. 2" HIGH LETTERING SHALL NOTE "PWSA" AND "SEWER" FOR ALL COMBINATION AND SANITARY SEWERS. FOR STORM ONLY SEWERS, CHANGE THE LABEL "SEWER" TO "STORM"
2. FRAMES AND COVERS MUST BE MACHINED TO INSURE GOOD BEARING AND PROPER FIT IN ANY POSITION.
3. VENT HOLES IN LID REQUIRED FOR COMBINATION AND SANITARY SEWERS (AS DIRECTED). VENT HOLES IN LID FOR STORM SEWERS ARE OPTIONAL.
4. CAST IRON SHALL CONFORM TO THE STANDARD SPECIFICATIONS FOR GRAY IRON CASTINGS, ASTM DESIGNATION: A48 MIN. CLASS No. 30 MINIMUM STRENGTH.

PWSA MANHOLE

N.T.S.

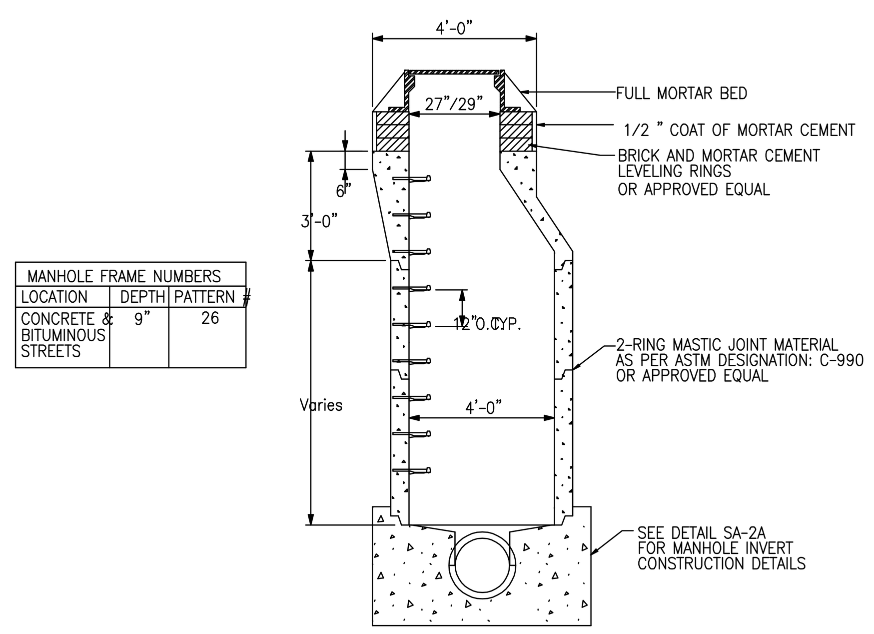

MANHOLE FRAME NUMBERS		
LOCATION	DEPTH	PATTERN #
CONCRETE & BITUMINOUS STREETS	9"	26

NOTES:
PRECAST MANHOLE SECTIONS SHALL BE ASTM C-478. LENGTHS MAY BE VARIED TO OBTAIN DESIRED DEPTH.

MANHOLE STEPS: 3/8 " GRADE 60 DEFORMED STEEL BAR (ASTM A-615), COATED WITH POLYPROPYLENE PLASTIC (ASTM D-2146 TYPE II CR. 49108).

UNLESS OTHERWISE SPECIFIED, ALL MANHOLE FRAMES SHALL BE PWSA/CITY OF PITTSBURGH PATTERN NUMBER AND SIZE SHOWN IN THE ABOVE CHART. MANHOLE COVERS SHALL BE CITY OF PITTSBURGH PATTERN 25 OR 25V AS DIRECTED. COVERS SHALL BE LETTERED "PWSA SEWER" FOR COMBINATION SEWERS AND IN 2" HIGH LETTERING. ADJUSTMENT TO GRADE SHALL BE MADE WITH BRICK AND CEMENT MORTAR; MAXIMUM ADJUSTMENT: 18". MANHOLE FRAME SHALL BE ANCHORED IN PLACE AT THE TOP OF THE PRECAST MANHOLE WITH TWO (2) 3/4 " ANCHOR BOLTS.

SANITARY SEWER MANHOLES SHALL BE WATERPROOFED ON THE EXTERIOR WITH AN APPROVED ASPHALT EMULSION FOUNDATION COATING. MATERIALS AND APPLICATION SHALL BE IN ACCORDANCE WITH ASTM DESIGNATION: D-1227.

48" DIAMETER MANHOLE DETAIL - MH #1 THRU MH #5

N.T.S.

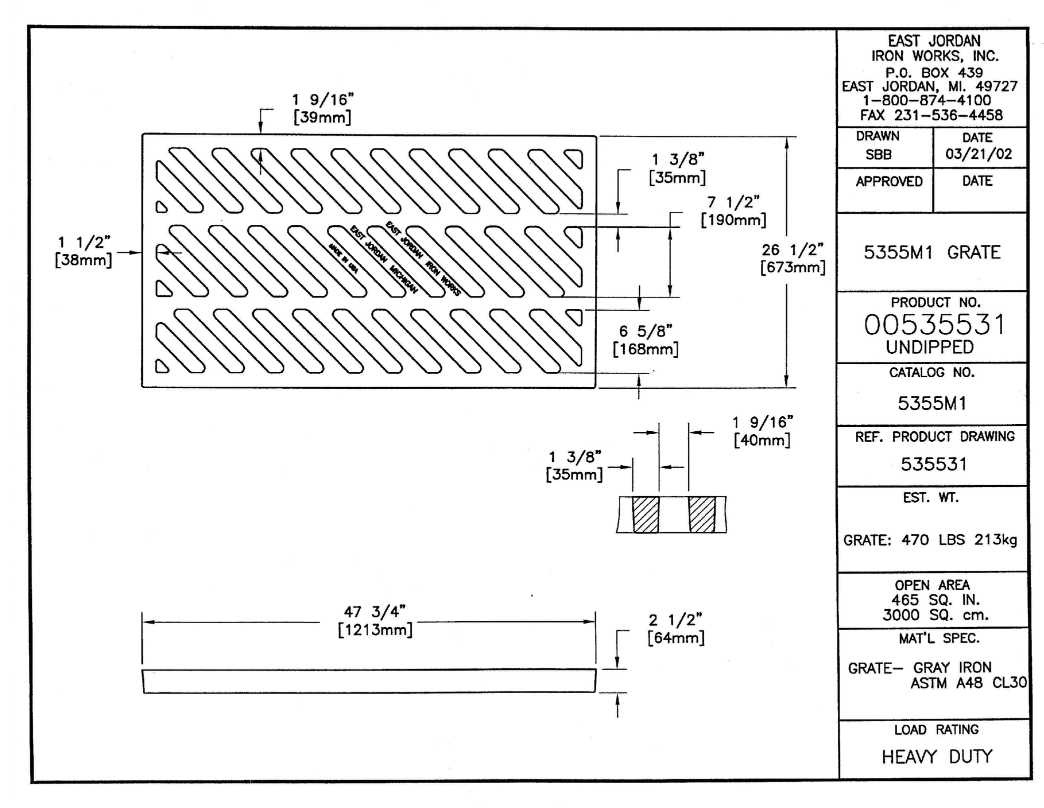

EAST JORDAN IRON WORKS

5355M1 GRATE

N.T.S.

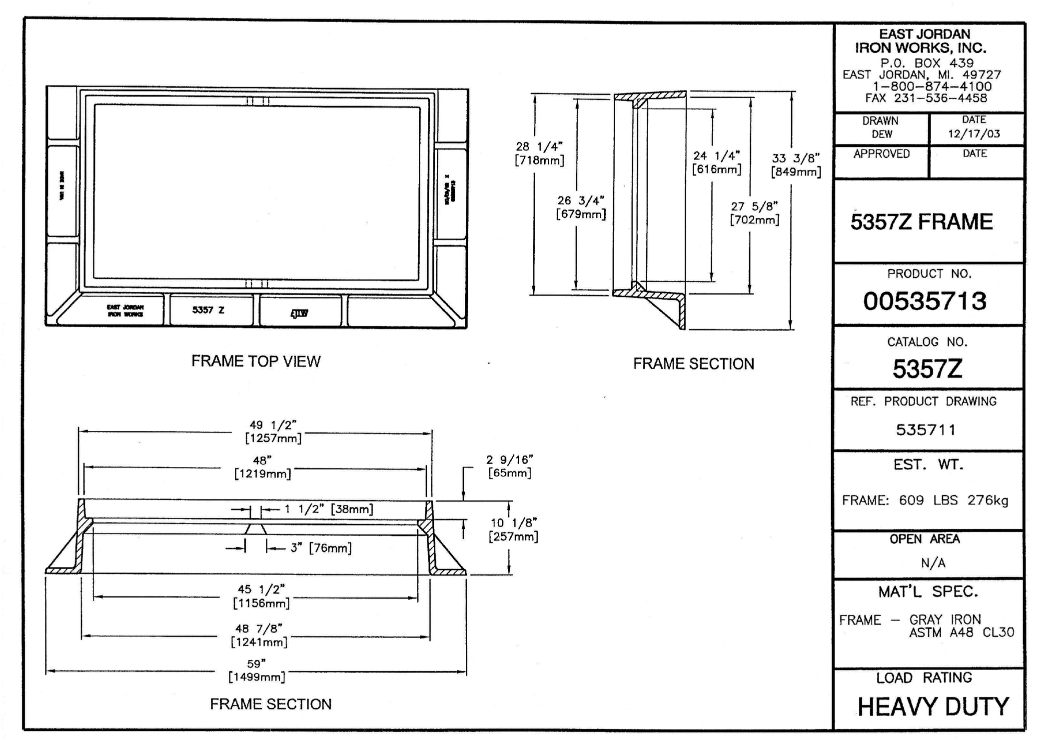

EAST JORDAN IRON WORKS

5357Z FRAME

N.T.S.

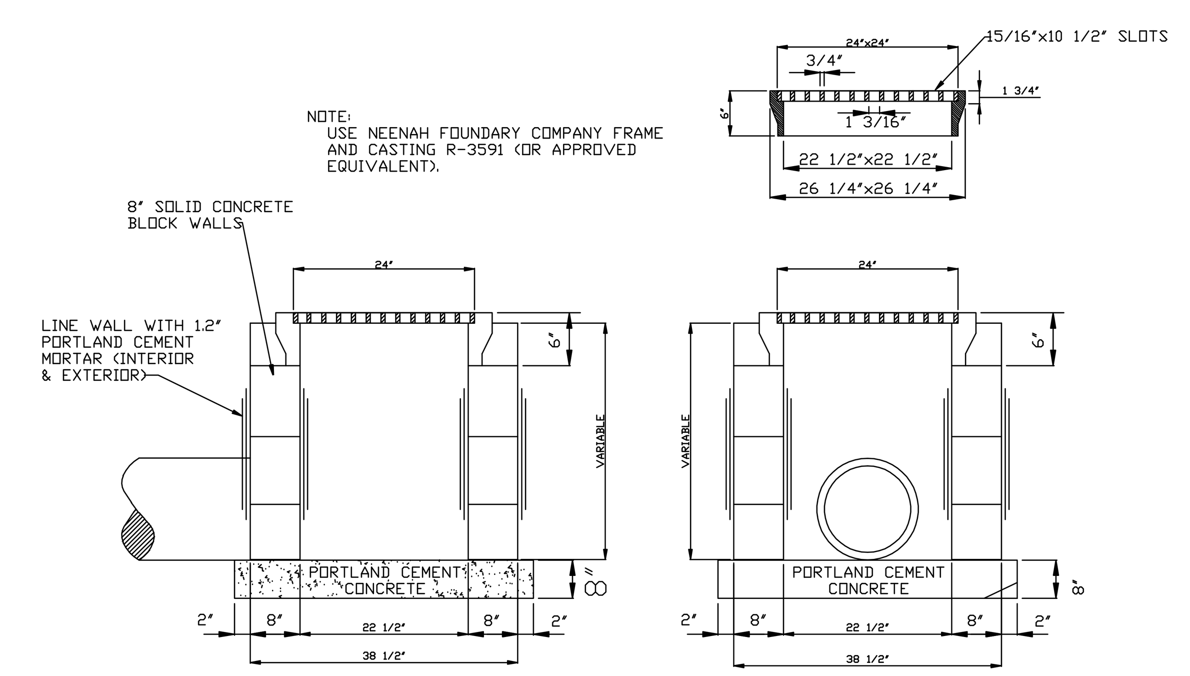

YARD DRAIN

N.T.S.

FOR CONSTRUCTION
FULLY SPRINKLERED

Revisions:	Date

CONSULTANTS:

HDR

HDRArchitecture, Inc.
1101 King Street | Suite 400 | Alexandria, Virginia 22314-2944 | 703.518.8500

PREPARED BY
KAG ENGINEERING, INC.
2704 BROWNSVILLE ROAD
PITTSBURGH, PA 15227

ARCHITECT/ENGINEERS:

ARCHITECTURE
ENGINEERING
INTERIOR DESIGN
DESIGN/BUILD
ASTORINO
227 Fort Pitt Boulevard Pittsburgh Pennsylvania 15222
TEL 412 765 1700 FAX 412 765 1711 WWW astorino.com

Drawing Title
Site Storm & Sanitary Sewer Construction Details

Approved: Project Director

Project Title
VA GAMES CONSOLIDATION VAMC, PITTSBURGH, PA RESEARCH OFFICE BLDG.

Location
VAPHS UNIVERSITY DRIVE

Date	Checked	Drawn
08-18-2010	KAG	KAG

Project Number
646GA4550R

Building Number
30

Drawing Number
CS7-900

Dwg. - of -

Office of Facilities Management

Department of Veterans Affairs

VA FORM 08-6231, OCT 1978

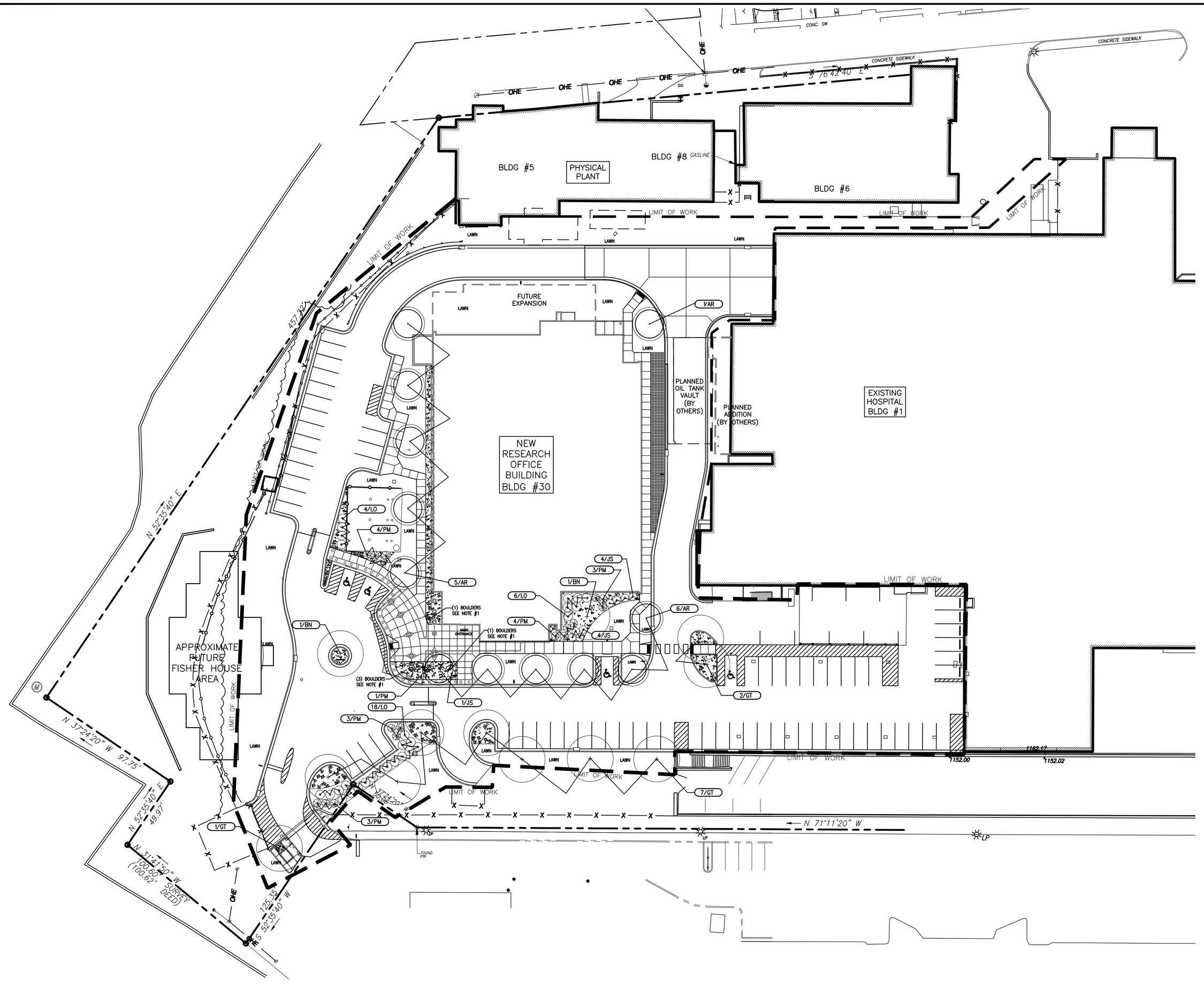

1 Site Landscape Plan

SCALE: 1" = 30'

Legend

TC	- TOP OF CURB
BC	- BOTTOM OF CURB
SS	- SANITARY/COMBINED SEWER
CS	- COMBINED SEWER MH
ST	- STORM
MH	- MANHOLE
TOP	- TOP OF CASTING
INV	- INVERT ELEVATION
WV	- WATER VALVE
GV	- GAS VALVE
FH	- FIRE HYDRANT
BM	- BENCH MARK
PM	- PARKING METER
MB	- MAILBOX
FP	- FLAG POLE
LP	- LIGHT POLE
DLC	- DUQUENSE LIGHT COMPANY
TS	- TRAFFIC SIGNAL
CNO	- COULD NOT OPEN
PL	- PROPERTY LINE
BT	- BELL TELEPHONE
PP	- POWER POLE
TW	- TOP OF WALL @ GRADE
BW	- BOTTOM OF WALL @ GRADE
TG	- TOP OF GRATE
TC	- TERRA COTTA PIPE (WHERE SHOWN NEXT TO SEWER LINE

EXISTING

- EX. PROPERTY LINE
- EX. RIGHT OF WAY LINE
- EX. EASEMENT
- EX. CONTOURS
- EX. GAS LINE
- EX. UNDERGROUND ELECTRIC LINE
- EX. AERIAL ELECTRIC/ TELEPHONE/CABLE TV
- EX. SANITARY SEWER (BY PLAN)
- EX. SANITARY SEWER (FIELD)
- EX. STORM SEWER
- EX. WATERLINE BY PLAN
- EX. FIRE HYDRANT
- EX. FENCE
- EX. BOLLARD/POST
- EX. SIGN
- EX. LIGHT POLE
- EX. UTILITY POLE
- EX. GUY ANCHOR/WIRE
- EX. GAS VALVE
- EX. TREES
- EX. WATER VALVE
- EX. GAS METER
- EX. SPOT ELEVATION
- EX. (TYPE W) INLET
- EX. (TYPE M) INLET
- EX. MANHOLE
- EX. YARD DRAIN
- EX. FLAG POLE
- LIMIT OF WORK LINE
- GUIDERAIL

PROPOSED

- PROPOSED FENCE
- PROPOSED SPOT ELEVATION
- PROPOSED CONTOURS
- PROPOSED INLET
- PROPOSED MANHOLE
- PROPOSED COORDINATE POINT
- PROPOSED UTILITY POLE
- PROPOSED SIGN
- PROPOSED LIGHT POLE
- PROPOSED STORM SEWER
- SIDEWALK CONTROL JOINT
- SIDEWALK EXPANSION JOINT
- BITUMINOUS PAVEMENT
- HEAVY DUTY VEHICULAR CONCRETE PAVEMENT
- CONCRETE CURB & GUTTER
- CONCRETE CURB
- CHAIN LINK FENCE
- PAVEMENT SUBDRAIN
- GUIDERAIL

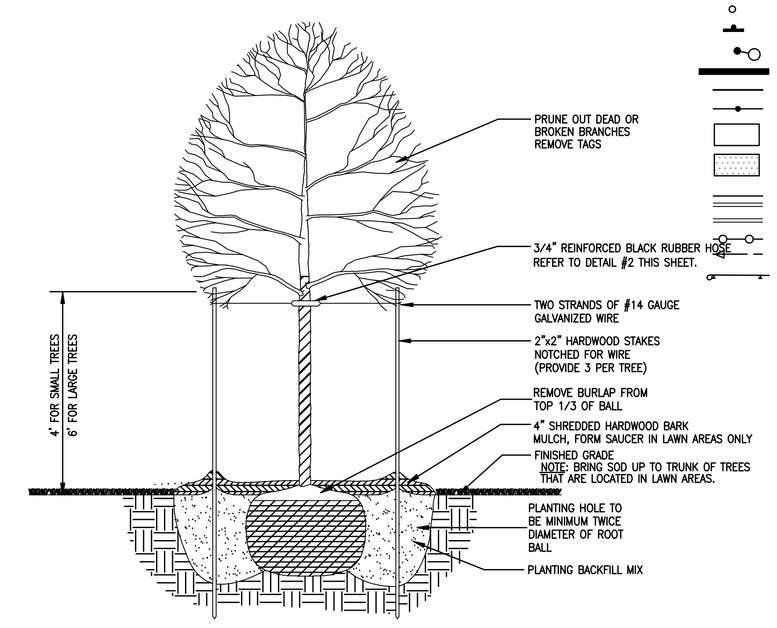

Tree Planting Detail

SCALE: N.T.S.

PLANT LIST

QTY	SYM	BOTANICAL NAME	COMMON NAME	SIZE	SPACING
TREES					
12	AR	ACER RUBRUM 'SUN VALLEY'	SUN VALLEY RED MAPLE	1 3/4" CAL. B&B	AS SHOWN
2	BN	BETULA NIGRA 'HERITAGE'	HERITAGE RIVER BIRCH	8' HT. (3 TRUNK) B&B	AS SHOWN
10	GT	GLEDITSIA TRICANTHOS INERMIS 'SKYLINE'	SKYLINE HONEYLOCUST	1 3/4" CAL B&B	AS SHOWN
SHRUBS					
51	JS	JUNIPERUS SABINA TAMARISCIFOLIA 'NEW BLUE'	NEW BLUE TAM JUNIPER	3 GAL.	5' O.C.
16	LO	LIGUSTRUM OBTUSIFOIUM 'REGALIANUM'	REGAL PRIVET	30" B&B	AS SHOWN
18	PM	PINUS MUGO	DWARF MUGO PINE	3 GAL	AS SHOWN
GROUND COVERS					
900		VINCA MINOR	MYRTLE	2 1/4" PEAT POTS	12" O.C.
		TYPICAL IN ALL SHRUB BEDS AND AS SHOWN - 4'-6" LAYER OF ORNAMENTAL RIVER STONE (OVERSIZE 4"-6") OVER HEAVY DUTY NON-WOVEN WEED BARRIER GEOTEXTILE FABRIC.			

NOTE #1. FURNISH AND INSTALL (4) LIMESTONE BOULDERS, (1 TON EACH, BLUE/GREEN COLOR).

NOTE #2. LIMIT OF LAWN SEEDING = LIMIT OF WORK AND/OR SEEDING OF ALL VEGETATED GROUND SURFACES DISTURBED BY CONSTRUCTION.

NOTE: THE UTILITY LOCATIONS SHOWN ON THIS PLAN ARE APPROX. LOCATIONS ONLY AS PER UTILITY COMPANY INFORMATION AND INFORMATION SUPPLIED BY THE PA ONE CALL SYSTEM.

SERIAL # 20102280550

Design:

*BEFORE YOU DIG ANYWHERE IN PENNSYLVANIA STOP! CALL PA. ONE-CALL AT 1-800-242-1776 TOLL FREE FOR ACTUAL FIELD UTILITY LOCATIONS.

PENNSYLVANIA ACT 38 (1991) REQUIRES NO LESS THAN 3 WORKING DAYS NOTICE NOR MORE THAN 10 WORKING DAYS NOTICE FROM EXCAVATORS WHO ARE ABOUT TO DIG, DRILL, BLAST, AUGER, BORE, GRADE, TRENCH, OR DEMOLISH WHEN IN THE CONSTRUCTION PHASE. A DESIGNER IS REQUIRED TO GIVE NO LESS THAN 10 WORKING DAYS NOR MORE THAN 90 WORKING DAYS NOTICE WHEN ENGAGED IN THE DESIGN PHASE. BOTH OF THESE CONDITIONS INVOLVE THE ENTIRE COMMONWEALTH.

BLDG NORTH

30 15 0 30 60

SCALE: 1" = 30'

FOR CONSTRUCTION
FULLY SPRINKLERED

Revisions:	Date

CONSULTANTS:

HDR Architecture, Inc.
1101 King Street | Suite 400 | Alexandria, Virginia 22314-2944 | 703.518.8500

ARCHITECT/ENGINEERS:

ARCHITECTURE ENGINEERING INTERIOR DESIGN DESIGN/BUILD
ASTORINO
2221 Fort Pitt Boulevard · Pittsburgh, Pennsylvania 15222
TEL 412 765 1700 FAX 412 765 1711 www.astorino.com

Drawing Title: Site Landscape Plan

Approved: Project Director

Project Title: VA GAERS CONSOLIDATION VAMC, PITTSBURGH, PA RESEARCH OFFICE BLDG.

Location: VAPHS UNIVERSITY DRIVE

Date: 08-18-2010 | Checked: MED | Drawn: NAA

Project Number: 0400A0000R

Building Number: 30

Drawing Number: LS1-000

Dwg. – of –

Office of Facilities Management

Department of Veterans Affairs

VA FORM 08-6231, OCT 1978

P:\Project\2005425.00\CAD\UNIVERSITY DRIVE\Research Office Building\Site\LS1-000.dwg MDMMCO 08/16/10 ; 10:46:07