ABBREVIATIONS

AC	AIR CONDITIONING UNIT
ACC	AIR COOLED CONDENSER
ACCU	AIR COOLED CONDENSING UNIT
ACRCU	AIR COOLED RECIPROCATING CHILLER UNIT
ACU	ABSORPTION CHILLER UNIT
AD	ACCESS DOOR
AF	AFTER FILTER
AFCE	AIR FLOW CONTROL VALVE
AFM	AIR FLOW MEASURING DEVICE
AFW	AIR FOIL WHEEL
AHU	AIR HANDLING UNIT
AP	ACCESS PANEL
ATC	AIR TEMPERTURE CONTROL
BC	BRANCH CONTROLLER
BIW	BACKWARD INCLINED WHEEL
BG	BOTTOM GRILLE (WALL TYPE)
BR	BOTTOM REGISTER (WALL TYPE)
C	CONVERTOR
CC	COOLING COIL
CCF	CENTRIFUGAL CEILING FAN
CCU	CENTRIFUGAL OR HELICAL ROTARY SCREW CHILLER UNIT
CD	CEILING DIFFUSER
CF	CENTRIFUGAL FAN
CG	CEILING GRILLE
CO	CLEAN OUT
COMP.	COMPRESSOR
CONV.	CONVECTOR
CP	CONDENSATE PUMP
CR	CEILING REGISTER
CU	CONDENSING UNIT
CUH	CABINET UNIT HEATER
CW	COLD WATER
D	AUTOMATIC DAMPER
Db	DRY BULB TEMPERATURE
dB	DECIBELS
DD	DISCHARGE DAMPERS
Dp	DEWPOINT TEMPERATURE
DX	DIRECT EXPANSION
E/A	EXHAUST AIR
EC	EVAPORATIVE CONDENSER
ECC	ENGINEERING CONTROL CENTER
EDH	ELECTRIC COIL DUCT HEATER
EER	ENERGY EFFICIENCY RATIO
EF	EXHAUST FAN
EGW	ETHYLENE GLYCOL–WATER SOLUTION (% GLYCOL BY VOLUME)
EMD	END OF MAIN DRIP (STEAM)
ERC	ENERGY RECOVERY COIL
ERP	ELECTRIC RADIANT CEILING PANEL
ET	EXPANSION TANK
EUH	ELECTRIC UNIT HEATER
EWC	EVAPORATIVE WATER COOLER
EX.	EXISTING
FC	FLEXIBLE CONNECTION
FCU	FAN COIL UNIT
FCW	FORWARD CURVED FAN
FLR.	FLOOR
F.DPR.	FIRE DAMPER
FS	FACTORY FABRICATED FAN SECTION
FTR	FIN TUBE RADIATION
GH	GRAVITY HOOD
HC	HEATING COIL
HD	HOOD
HE	AIR TO AIR HEAT EXCHANGER
HF	HEPA FILTER
HP	HORSEPOWER
HPR	HIGH PRESSURE STEAM CONDENSATE RETURN
HPS	HIGH PRESSURE STEAM
HWP	HOT WATER PUMP
HV	HEATING AND VENTILATING UNIT
HX	HEAT EXCHANGER
ICF	IN–LINE CENTRIFUGAL FAN
IEF	INDUSTRIAL EXHAUST FAN
IFB	INTEGRAL FACE AND BYPASS
IU	INDUCTION UNIT
IV	INLET VANES
LCD	LINEAR CEILING DIFFUSER
LPR	LOW PRESSURE STEAM CONDENSATE RETURN
LPS	LOW PRESSURE STEAM
LTCP	LOCAL TEMPERATURE CONTROL PANEL
LBS/HR	POUNDS PER HOUR
MAU	MAKE–UP AIR UNIT
MB	MIXING BOX
MER	MECHANICAL ROOM
MPR	MEDIUM PRESSURE STEAM CONDENSATE RETURN
MPS	MEDIUM PRESSURE STEAM
MAX.	MAXIMUM
MIN.	MINIMUM
NOM.	NOMINAL
O/A	OUTDOOR AIR
P	PUMP
PC	PUMPED CONDENSATE
PD	PRESSURE DROP
PEF	PROPELLER TYPE EXHAUST FAN
PF	PRE–FILTER
PFW	PUMPED FEED WATER
PGW	PROPYLENE GLYCOL–WATER SOLUTION
PH	PREHEAT
POD	POWER OPERATED, OPPOSED BLADE DAMPER
PPD	POWER OPERATED, PARALLEL BLADE DAMPER
PRV	PRESSURE REDUCING VALVE
R/A	RETURN AIR
RCP	RADIANT CEILING PANEL
RCU	RECIPROCATING CHILLER UNIT
REL	RELIEF AIR
RF	RETURN FAN
RH	REHEAT COIL
Rh	RELATIVE HUMIDITY
RV	POWER TYPE ROOF VENTILATOR
S/A	SUPPLY AIR
SA	SOUND ATTENUATING UNIT
SCD	SMOKE CONTROL DAMPER
SCR	SILICON CONTROLLED RECTIFIER
SD	SMOKE DAMPER
SF	SUPPLY FAN
Sp. Gr.	SPECIFIC GRAVITY
SH	STEAM HUMIDIFIER
SP	STATIC PRESSURE
SPS	STATIC PRESSURE SENSOR
SSAC	SPLIT SYSTEM AIR CONDITIONER
TG	TOP GRILLE (WALL TYPE)
TR	TOP REGISTER (WALL TYPE)
TU	TERMINAL UNIT
TWU	THRU WALL UNIT
UC	UNIT COOLER
UH	UNIT HEATER
URV	UPBLAST POWER TYPE ROOF VENTILATOR
UV	UNIT VENTILATOR
V	VALVE
VAF	VANE AXIAL FAN
VCC	VOLUMETRIC CONTROL CENTER
VD	VOLUME DAMPER (MANUAL OPPOSED BLADE)
VE	VOLUME EXTRACTOR
VFD	VARIABLE FREQUENCY DRIVE
V1	VIBRATION ISOLATOR
VIV	VARIABLE INLET VANES
VP	VACUUM PUMP
VR	VACUUM STEAM CONDENSATE RETURN
VSMC	VARIABLE SPEED MOTOR CONTROLLER
Wb	WET BULB TEMPERATURE
WEF	WALL TYPE EXHAUST FAN
WF	WATER FILTER
WFMD	WATER FLOW MEASURING DEVICE
VP	VACUUM PUMP
VR	VACUUM STEAM CONDENSATE RETURN
VSMC	VARIABLE SPEED MOTOR CONTROLLER
Wb	WET BULB TEMPERATURE
WEF	WALL TYPE EXHAUST FAN
WF	WATER FILTER
WFMD	WATER FLOW MEASURING DEVICE

GENERAL NOTES

1. ALL PIPING AND DUCTS IN FINISHED ROOMS OR SPACES SHALL BE CONCEALED IN FURRED CHASES OR ABOVE SUSPENDED CEILINGS.
2. THE FIRST FIGURE OF DUCT SIZE INDICATES DIMENSION OF FACE SHOWN OR INDICATED.
3. ACCESS PANELS IN SUSPENDED CEILINGS ARE REQUIRED FOR ALL VALVES, TRAPS, DAMPERS, CLEANOUTS, CONTROLS, ETC. ACCESS PANELS SHALL BE FURNISHED AND INSTALLED UNDER THE ARCHITECTURAL SPECIFICATIONS.
4. TOTAL STATIC PRESSURE NOTED IN THE SCHEDULES INCLUDES DUCT SYSTEM, TERMINAL UNITS, FILTERS, COILS, ETC.
5. FOR TYPICAL STEAM, WATER AND REFRIGERANT PIPING CONNECTIONS TO EQUIPMENT SEE STANDARD EQUIPMENT DETAILS.
6. DIFFUSER, REGISTER AND GRILLE SIZES SHOWN ON FLOOR PLANS ARE NECK SIZES.
7. WATER PIPE CONNECTIONS TO AIR HEATING AND COOLING COILS SHALL BE MADE TO PROVIDE COUNTER FLOW BETWEEN WATER AND AIR.
8. REFER TO ARCHITECTURAL REFLECTED CEILING PLANS FOR EXACT LOCATIONS OF CEILING DIFFUSERS, REGISTERS, AND GRILLES.
9. ALL ITEMS THAT REQUIRE ACCESS, SUCH AS FOR OPERATING, CLEANING, SERVICING, MAINTENANCE, AND CALIBRATION, SHALL BE EASILY AND SAFELY ACCESSIBLE BY PERSONS STANDING AT FLOOR LEVEL, OR STANDING ON PERMANENT PLATFORMS, WITHOUT THE USE OF PORTABLE LADDERS. EXAMPLES OF THESE ITEMS INCLUDE, BUT ARE NOT LIMITED TO: ALL TYPES OF VALVES, FILTERS AND STRAINERS, TRANSMITTERS, CONTROL DEVICES. PRIOR TO COMMENCING INSTALLATION WORK, REFER CONFLICTS BETWEEN THIS REQUIREMENT AND CONTRACT DRAWINGS TO THE RE/COTR FOR RESOLUTION.

PIPING SYMBOLS

HEATING

- HPS — HIGH PRESSURE STEAM (60 PSIG AND ABOVE)
- HPR — HIGH PRESSURE STEAM CONDENSATE RETURN
- LPS — LOW PRESSURE STEAM (15 PSIG AND BELOW)
- LPR — LOW PRESSURE STEAM CONDENSATE RETURN
- PC — CONDENSATE PUMP DISCHARGE
- HWS — HOT WATER HEATING SUPPLY
- HWR — HOT WATER HEATING RETURN
- V — VENT LINE

AIR CONDITIONING

- RL — REFRIGERANT LIQUID
- RS — REFRIGERANT SUCTION
- CHWS — CHILLED WATER SUPPLY
- CHWR — CHILLED WATER RETURN
- — MAKE–UP WATER
- D — DRAIN LINE

VALVE SYMBOLS

- SHUT–OFF VALVE
- GLOBE VALVE
- BALL VALVE WITH 3/4 " HOSE ADAPTER
- CHECK VALVE
- ANGLE GLOBE VALVE
- BUTTERFLY VALVE
- BALL VALVE
- BALANCING VALVE
- CIRCUIT SETTER
- STRAIGHT–THRU MODULATING CONTROL VALVE
- STRAIGHT–THRU TWO POSITION CONTROL VALVE
- THREE–WAY MODULATING CONTROL VALVE
- AUTOMATIC FLOW CONTROL VALVE
- SAFETY OR PRESSURE RELIEF VALVE
- PRESSURE REDUCING VALVE
- MANUAL AIR VENT
- TEST PLUG (PRESSURE/TEMPERATURE)

GENERAL SYMBOLS

- DIRECTION OF PIPE PITCH (DOWN)
- DIRECTION OF FLOW
- PIPE ANCHOR
- ALIGNMENT GUIDES
- REDUCER OR INCREASER
- ECCENTRIC REDUCER
- TOP CONNECTION, 45° OR 90°
- BOTTOM CONNECTION, 45° OR 90°
- SIDE CONNECTION
- CAPPED OUTLET
- RISE OR DROP IN PIPE
- UNION
- ORIFICE UNION
- POINT OF CONNECTION BETWEEN NEW AND EXISTING WORK
- LIMIT OF DEMOLITION
- BLAST THERMOSTATIC TRAP
- INVERTED BUCKET TRAP SET INCLUDING PIPING ACCESSORIES
- FLOAT & THERMOSTATIC TRAP SET INCLUDING PIPING ACCESSORIES
- THERMOSTATIC TRAP
- STRAINER
- THERMOMETER
- PRESSURE GAGE
- WATER FLOW MEASURING DEVICE
- EXISTING PIPE TO BE REMOVED

TERMINAL UNIT SYMBOLS

- UNIT HEATER (HORIZONTAL)
- BUILDING NO. WHERE EQUIPMENT IS LOCATED.
- EQUIPMENT ABBREVIATION (SUPPLY FAN)
- 26–SF–3 — SUPPLY FAN NO.3 IN BUILDING NO.26
- TYPICAL UNIT NO.
- ITEM (TERMINAL UNIT SHOWN)
- TU–G01 — ITEM NUMBER (TERMINAL UNIT NO.1)
- FLOOR LOCATION (GROUND FLOOR)
- VARIABLE VOLUME \ CONSTANT VOLUME TERMINAL UNIT WITH HEATING COIL. REFER TO SINGLE DUCT AIR TERMIINAL UNIT SCHEDULE.
- RADIANT CEILING PANEL

DRAWING SYMBOLS

- 2 / H4 — DETAIL NUMBER / DRAWING NUMBER WHERE DRAWN
- A / H7 — SECTION LETTER / DRAWING NUMBER WHERE SHOWN
- D–1 / 100 / 12ø — DIFFUSER, REGISTER OR GRILLE TYPE / CFM / NECK SIZE OR REGISTER/GRILLE SIZE
- G–2 / 20x8 — REGISTER OR GRILLE TYPE / SIZE
- RCP–A / 10 FT — RADIANT CEILING PANEL TYPE / CFM

CONTROLS SYMBOLS

- T H — ROOM CONTROL: THERMOSTAT. HUMIDISTAT
- T — REMOTE BULB THERMOSTAT
- T — DUCT OR PIPE THERMOSTAT WITH AVERAGING ELEMENT. PROVIDE 12" [300mm] MIN. LENGTH IN DUCT WHEN SPACE PERMITS.
- T — DUCT THERMOSTAT WITH AVERAGING ELEMENT
- T H CO2 — ROOM SENSOR: TEMPERATURE, HUMIDITY, CARBON DIOXIDE
- T — DUCT TEMPERATURE SENSOR
- T WM — WALL MOUNTED TEMPERATURE SENSOR
- H — DUCT HUMIDITY SENSOR
- DP — DUCT DEW POINT SENSOR
- SP — DUCT STATIC PRESSURE SENSOR
- BSP — BUILDING STATIC PRESSURE SENSOR
- T — DUCT TEMPERATURE SENSOR WITH AVERAGING ELEMENT
- F S — SMOKE DETECTOR (SEE ELECTRICAL SPECIFICATIONS)
- TEMPERATURE SENSING ELEMENT FOR TRANSMITTING TEMPERATURE TO INDICATOR ON LTCP. (PROVIDE 12 INCHES [205mm] MINIMUM LENGTH IN DUCT WHEN SPACE PERMITS.)
- A — SENSOR WITH AVERAGING ELEMENT TO TRANSMIT TEMPERATURE TO LTCP
- M — CONTROL AIR MAIN
- EP — ELECTRO–PNEUMATIC (EP) SWITCH
- C — HOLDING COIL IN MOTOR STARTER
- R2 — RELAY COIL
- R2–A — CONTACT, NORMALLY OPEN (N.O.)
- R2–B — CONTACT, NORMALLY CLOSED (N.C.)
- SWITCH
- R — PILOT LIGHT (RED)
- H1 N — CONTROL CIRCUIT CONNECTION
- JB — 15 AMP, 115V JUNCTION BOX IN CEILING FOR ATC USE

DUCTWORK SYMBOLS

- DUCT WITH SOUND LINING
- MANUAL VOLUME DAMPER
- FIRE DAMPER
- BDD — BACK DRAFT DAMPER
- S — SMOKE DAMPER
- I — ISOLATION DAMPER
- M.O.D. — MOTOR OPERATED DAMPER
- S. DPR — N — SMOKE DAMPER
- MANUAL SPLITTER DAMPER
- A — AIR MEASURING STATION

DUCTWORK SYMBOLS (cont)

- STAINLESS STEEL DUCT
- OR — DOUBLE WALL CASING PANEL
- 45° SUPPLY — STANDARD BRANCH SUPPLY OR RETURN, NO SPLITTER (45° TAP)
- 45° RETURN
- DUCT MOUNTED COIL (HOT WATER OR STEAM COIL)
- DUCT MOUNTED COIL (ELECTRIC)
- UP DN — SUPPLY DUCT
- UP DN — RETURN DUCT
- UP DN — EXHAUST DUCT
- CEILING DIFFUSERS
- SUPPLY TOP REGISTER OR GRILLE (WALL TYPE)
- RETURN CEILING REGISTER OR GRILLE
- EXHAUST CEILING REGISTER OR GRILLE
- EXHAUST OR RETURN BOTTOM REGISTER OR GRILLE (WALL TYPE)
- EXHAUST OR RETURN REGISTER OR TOP GRILLE (WALL TYPE)
- VANED ELBOW & AIR SPLIT TYPE DUCT TAKE–OFF
- CONNECT NEW DUCT TO EXISTING DUCT
- R — INCLINED RISE, IN DIRECTION OF AIR FLOW
- D — INCLINED DROP, IN DIRECTION OF AIR FLOW
- LIMIT OF DEMOLITION
- FC — FLEXIBLE CONNECTION
- VANED ELBOW (PROVIDE ALL SQUARE OR RECTANGULAR ELBOWS WITH VANES EVEN IF SYMBOL IS MISSING)
- STANDARD RADIUS ELBOW
- 10x8 — NEW DUCT (WIDTH x DEPTH)
- EXISTING DUCT TO REMAIN
- EXISTING DUCT TO BE REMOVED
- LOUVER (LOUVER SPECIFIED IN ARCHITECTURAL SECTION.)
- FLEXIBLE DUCTWORK

FOR CONSTRUCTION
FULLY SPRINKLERED

Revisions:	Date

CONSULTANTS:

HDR

HDR Architecture, Inc.

1101 King Street | Suite 400 | Alexandria, Virginia 22314-2944 | 703.518.8500

ARCHITECT/ENGINEERS:

ARCHITECTURE ENGINEERING INTERIOR DESIGN DESIGN/BUILD

ASTORINO

227 Fort Pitt Boulevard Pittsburgh Pennsylvania 15222
TEL 412 765 3700 FAX 412 765 3711 www.astorino.com

Drawing Title	HVAC Symbols, Abbreviations, and General Notes
Approved: Project Director	
Project Title	VA CARES CONSOLIDATION VAMC, PITTSBURGH, PA RESEARCH OFFICE BLDG.
Location	VAPHS UNIVERSITY DRIVE
Date	08-18-10
Checked	JS
Drawn	RAN
Project Number	646CA2500R
Building Number	30
Drawing Number	MH0-101
	Dwg. -- of --

Office of Facilities Management

Department of Veterans Affairs

VA FORM 08–6231, OCT 1978

P:\Project\20054250.00\CAD\UNIVERSITY DRIVE\Research Office Building\HVAC\MH0-101.dwg MBESHENCH 10/30/09 - 09:04:11

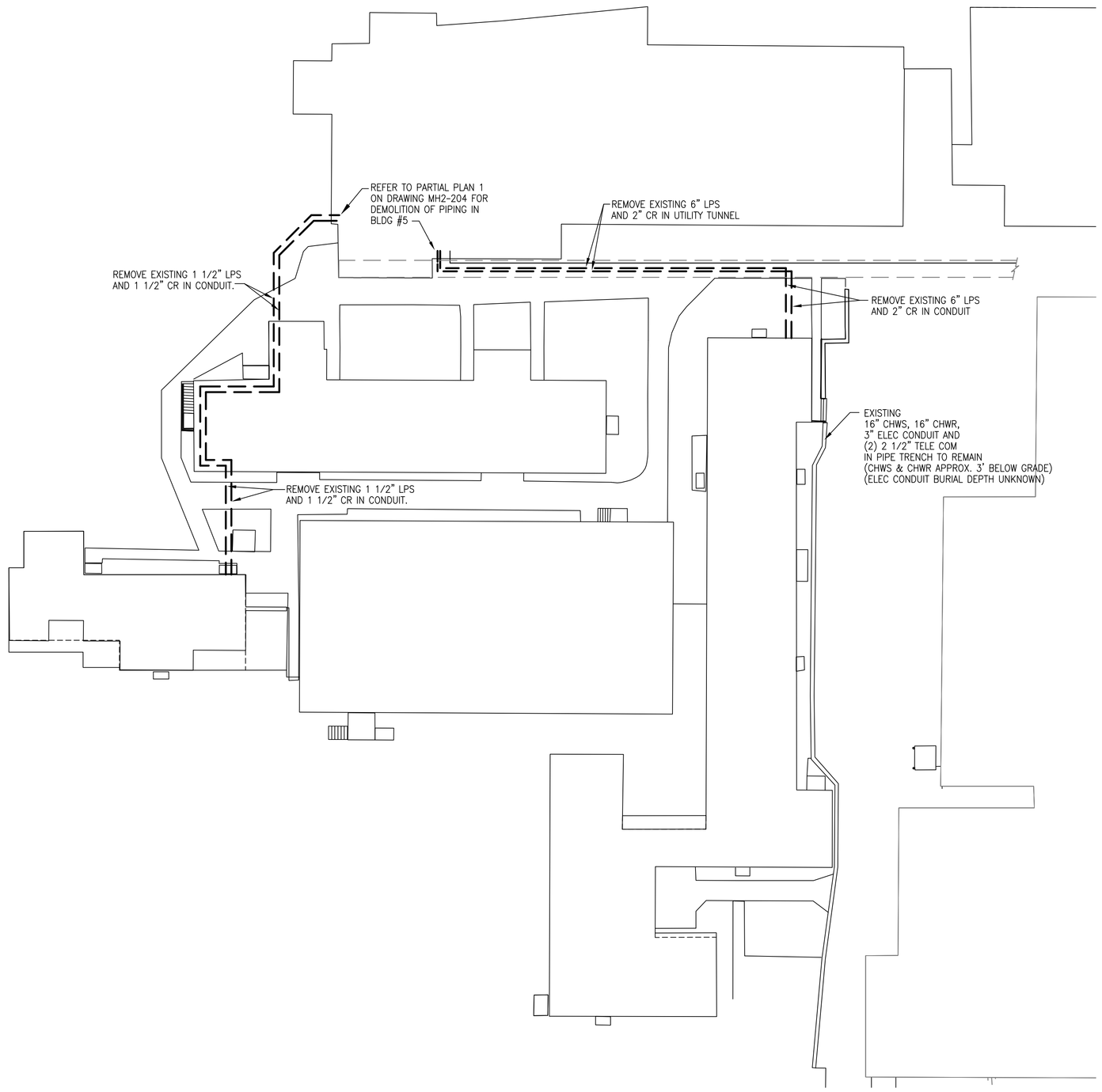

1 Site Steam Piping Demolition Plan
SCALE: 1" = 20'

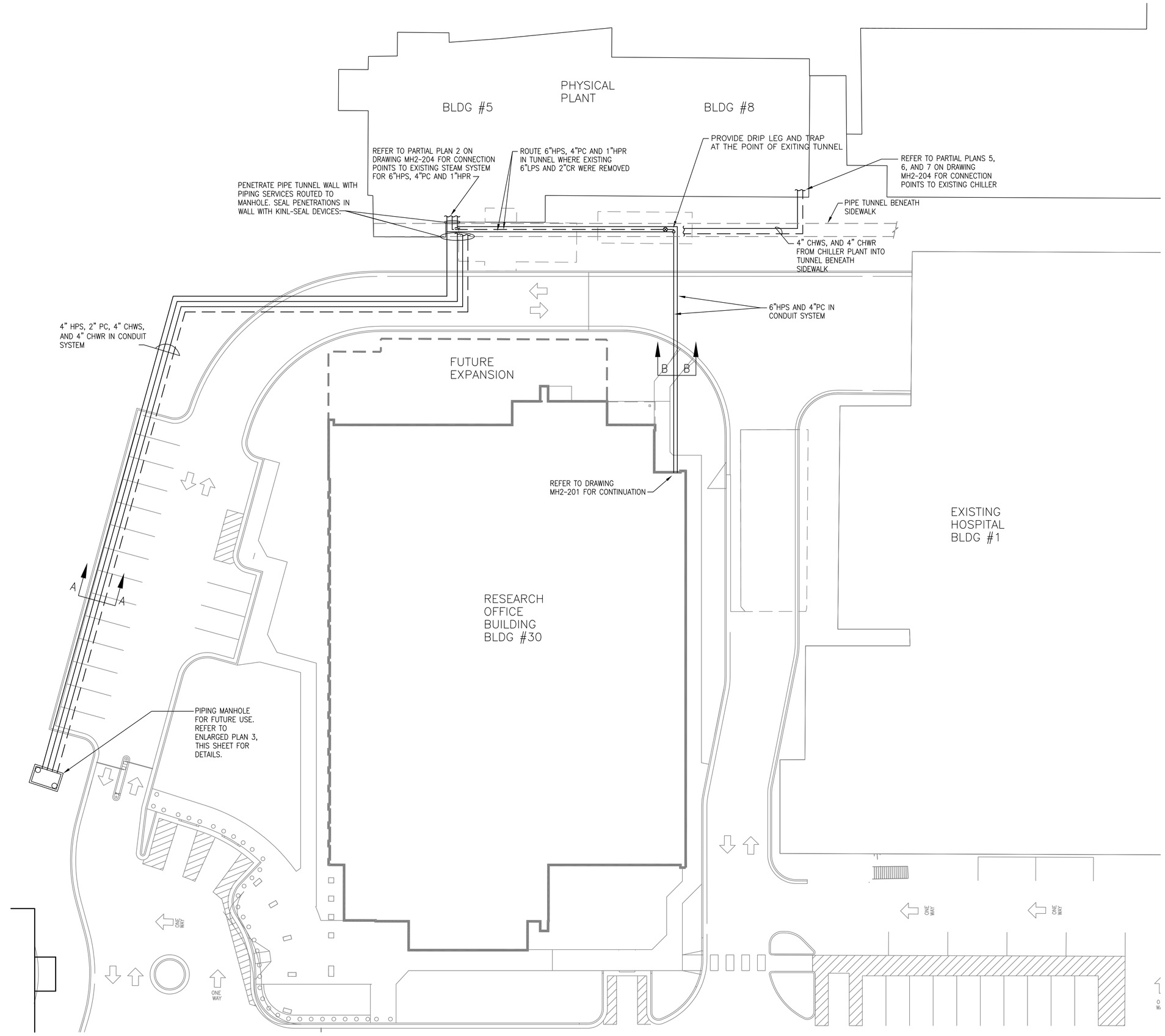

2 Site Piping Plan
SCALE: 1" = 20'

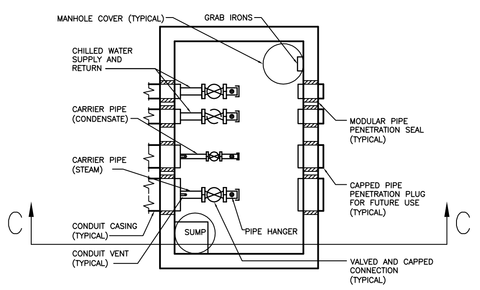

3 Piping Manhole Enlarged Plan
SCALE: NTS

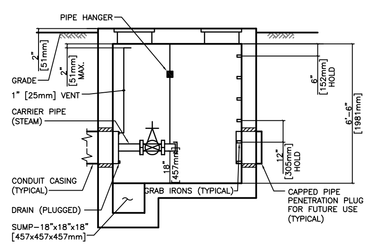

NOTES:
1. DIMENSIONS ARE MINIMUM UNLESS OTHERWISE NOTED.
2. PROVIDE STRUCTURAL DESIGN SUITABLE FOR SITE LOCATION.
3. FOR ADDITIONAL MANHOLE DETAILS INCLUDING STRUCTURE, VENTILATION, AND DRAINAGE CONSULT ARMY TECHNICAL MANUAL, TM-5-810-7.
4. MINIMUM FLOOR SPACE 6'x10'.

4 Piping Manhole Section C
SCALE: NTS

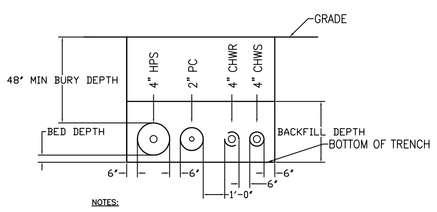

NOTES:
1. INSTALL HPS AND PC PIPING IN CASING SIZED BY MANUFACTURER TO ADEQUATELY ACCOMODATE THERMAL EXPANSION.
2. DEPTH AND COMPACTION OF BED AND BACKFILL TO BE PER PIPING SYSTEM MANUFACTURER'S RECOMMENDATIONS.
3. SLOPE ALL PIPING A MINIMUM OF 1" PER 40'-0" IN DIRECTION OF STEAM FLOW.

5 Pipe Trench Section A
SCALE: NTS

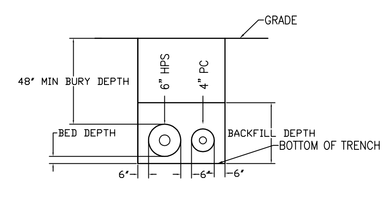

NOTES:
1. INSTALL HPS AND PC PIPING IN CASING SIZED BY MANUFACTURER TO ADEQUATELY ACCOMODATE THERMAL EXPANSION.
2. DEPTH AND COMPACTION OF BED AND BACKFILL TO BE PER PIPING SYSTEM MANUFACTURER'S RECOMMENDATIONS.
3. SLOPE ALL PIPING A MINIMUM OF 1" PER 40'-0" IN DIRECTION OF STEAM FLOW.

6 Pipe Trench Section B
SCALE: NTS

NORTH

FOR CONSTRUCTION
FULLY SPRINKLERED

Revisions:	Date

CONSULTANTS:

HDR

HDR Architecture, Inc.

1101 King Street | Suite 400 | Alexandria, Virginia 22314-2944 | 703.518.8500

ARCHITECT/ENGINEERS:

ARCHITECTURE ENGINEERING INTERIOR DESIGN DESIGN/BUILD

ASTORINO

227 Fort Pitt Boulevard Pittsburgh Pennsylvania 15222
TEL 412 765 1700 FAX 412 765 1711 www.astorino.com

Drawing Title: **HVAC Site Steam Piping Plans**

Approved: Project Director

Project Title: **VA CARES CONSOLIDATION VAMC, PITTSBURGH, PA RESEARCH OFFICE BLDG.**

Location: **VAPHS UNIVERSITY DRIVE**

Date: **08-18-10** | Checked: **MED** | Drawn: **NAA**

Project Number: **646CA2500R**

Building Number: **30**

Drawing Number: **MHS-101**

Dwg: -- of --

Office of Facilities Management

Department of Veterans Affairs

VA FORM 08-6231, OCT 1978

P:\Project\20054125.00\CAD\UNIVERSITY DRIVE\Research Office Building\HVAC\MHS-101.dwg JSABO 06/18/10 - 13:51:34

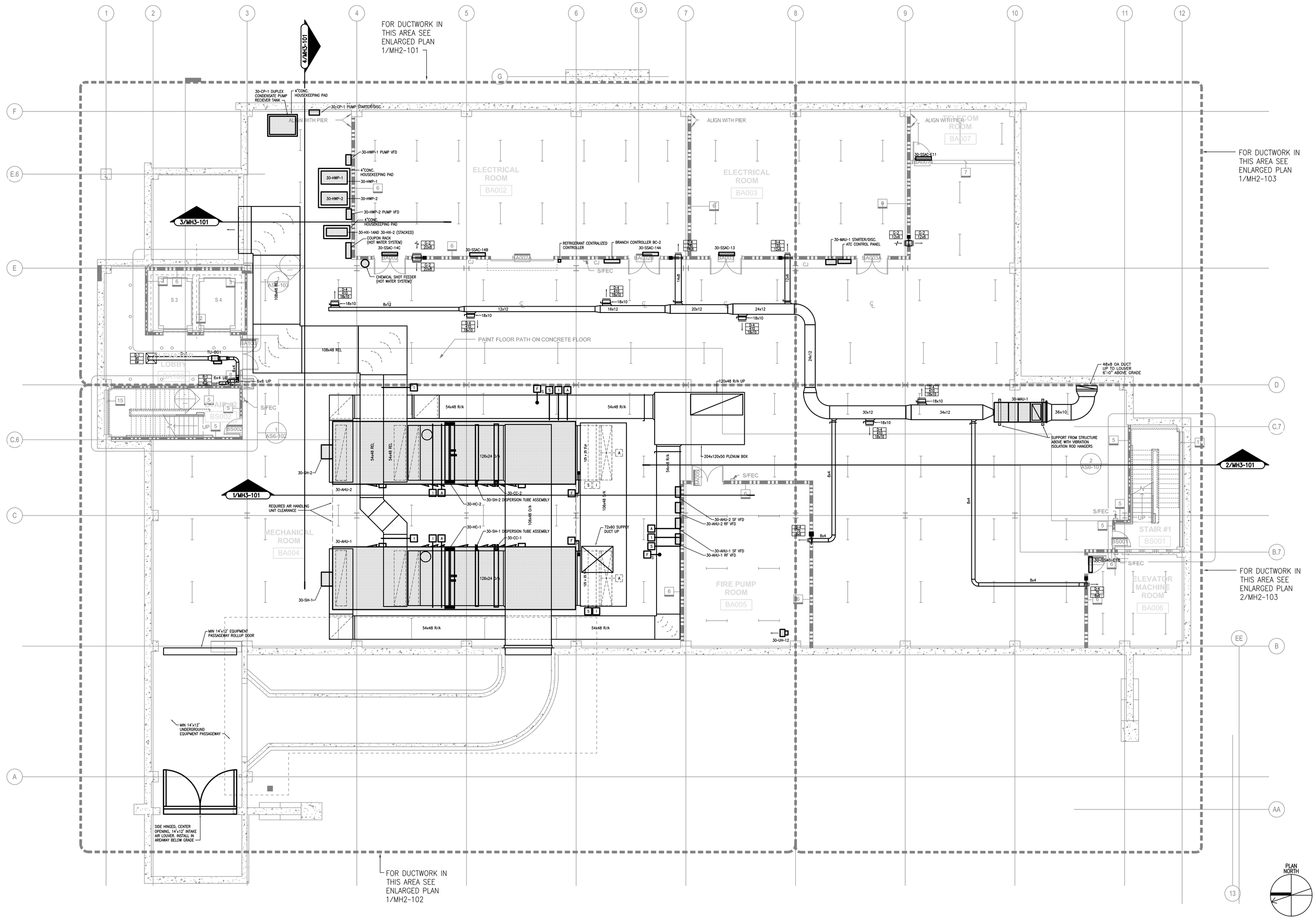

1 Basement Floor Plan - HVAC Ductwork
SCALE: 1/8"=1'-0"

FOR CONSTRUCTION
FULLY SPRINKLERED

Revisions:	Date

CONSULTANTS:

HDR

HDR Architecture, Inc.

1101 King Street | Suite 400 | Alexandria, Virginia 22314-2944 | 703.518.8500

ARCHITECT/ENGINEERS:

ARCHITECTURE ENGINEERING INTERIOR DESIGN DESIGN/BUILD ASTORINO

227 Fort Pitt Boulevard Pittsburgh Pennsylvania 15222
TEL 412 765 1700 FAX 412 765 1711 www.astorino.com

Drawing Title: **Basement Floor Plan HVAC Ductwork**

Approved: Project Director

Project Title: **VA CARES CONSOLIDATION VAMC, PITTSBURGH, PA RESEARCH OFFICE BLDG.**

Location: **VAPHS UNIVERSITY DRIVE**

Date: **08-18-10** | Checked: **JS** | Drawn: **RAN**

Project Number: **646CA2500R**

Building Number: **30**

Drawing Number: **MH1-101**

Dwg. -- of --

Office of Facilities Management

Department of Veterans Affairs

VA FORM 08-6231, OCT 1978

P:\Project\20050425.00\CAD\UNIVERSITY DRIVE\Research Office Building\HVAC\MH1-101.dwg RNOLLA 06/24/10 ; 08:15:55

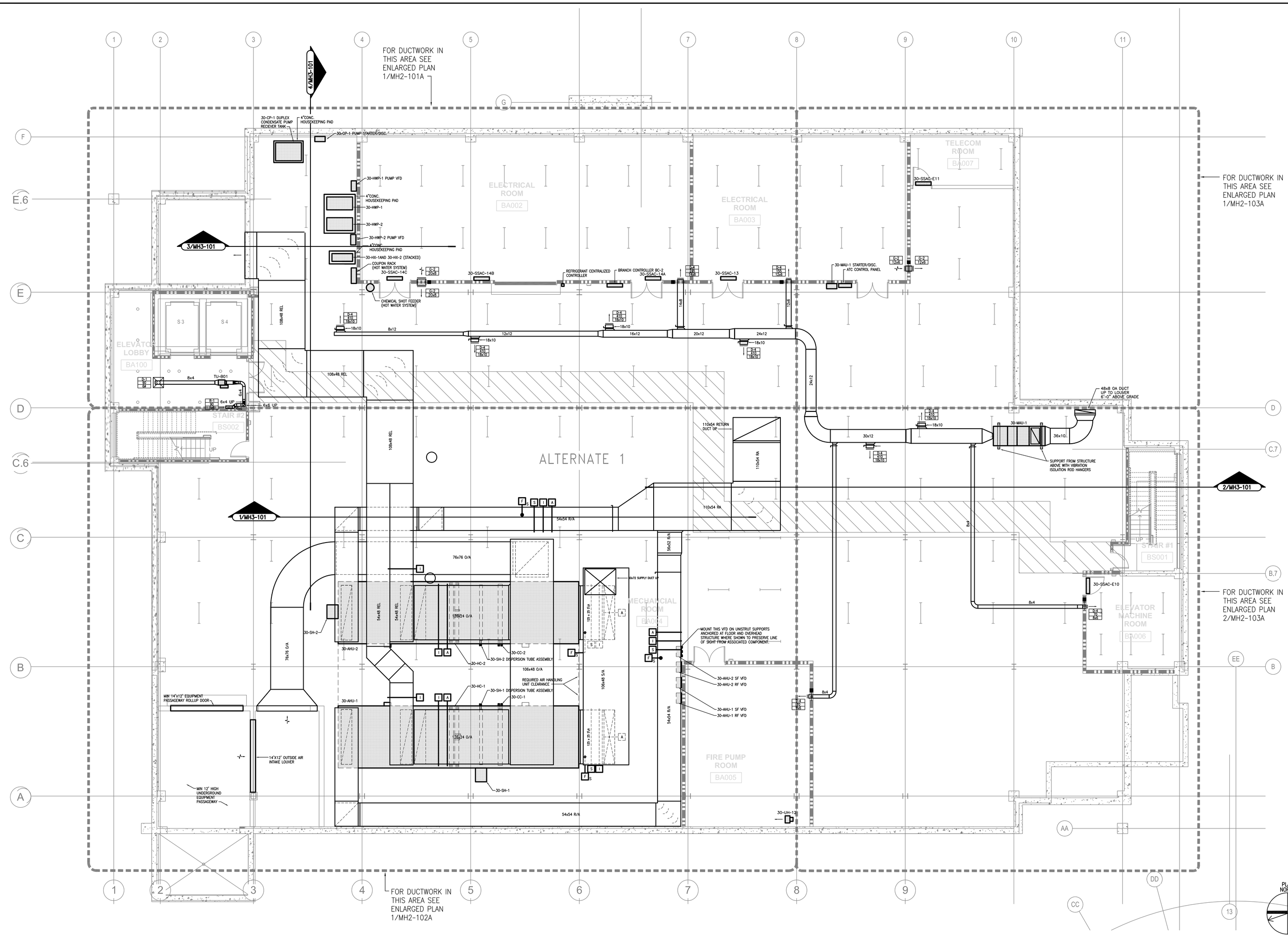

1 Basement Floor Plan - HVAC Ductwork - Alternate #1

SCALE: 1/8"=1'-0"

FOR CONSTRUCTION
FULLY SPRINKLERED

Revisions:	Date

CONSULTANTS:

HDR Architecture, Inc.
1101 King Street | Suite 400 | Alexandria, Virginia 22314-2944 | 703.518.8500

ARCHITECT/ENGINEERS:

ARCHITECTURE ENGINEERING INTERIOR DESIGN DESIGN/BUILD
ASTORINO
227 Fort Pitt Boulevard Pittsburgh Pennsylvania 15222
TEL 412 765 1700 FAX 412 765 1711 www.astorino.com

Drawing Title: **Basement Floor Plan HVAC Ductwork - Alternate #1**

Approved: Project Director

Project Title: **VA CARES CONSOLIDATION VAMC, PITTSBURGH, PA RESEARCH OFFICE BLDG.**

Location: **VAPHS UNIVERSITY DRIVE**

Date: **08-18-10** | Checked: **JS** | Drawn: **RAN**

Project Number: **646CA2500R**

Building Number: **30**

Drawing Number: **MH1-101A**

Dwg: -- of --

Office of Facilities Management

Department of Veterans Affairs

VA FORM 08-6231, OCT 1978

P:\Project\20054525.00\CAD\UNIVERSITY DRIVE\Research Office Building\HVAC\MH1-101A.dwg RNOLLA 08/18/10 ; 11:43:14

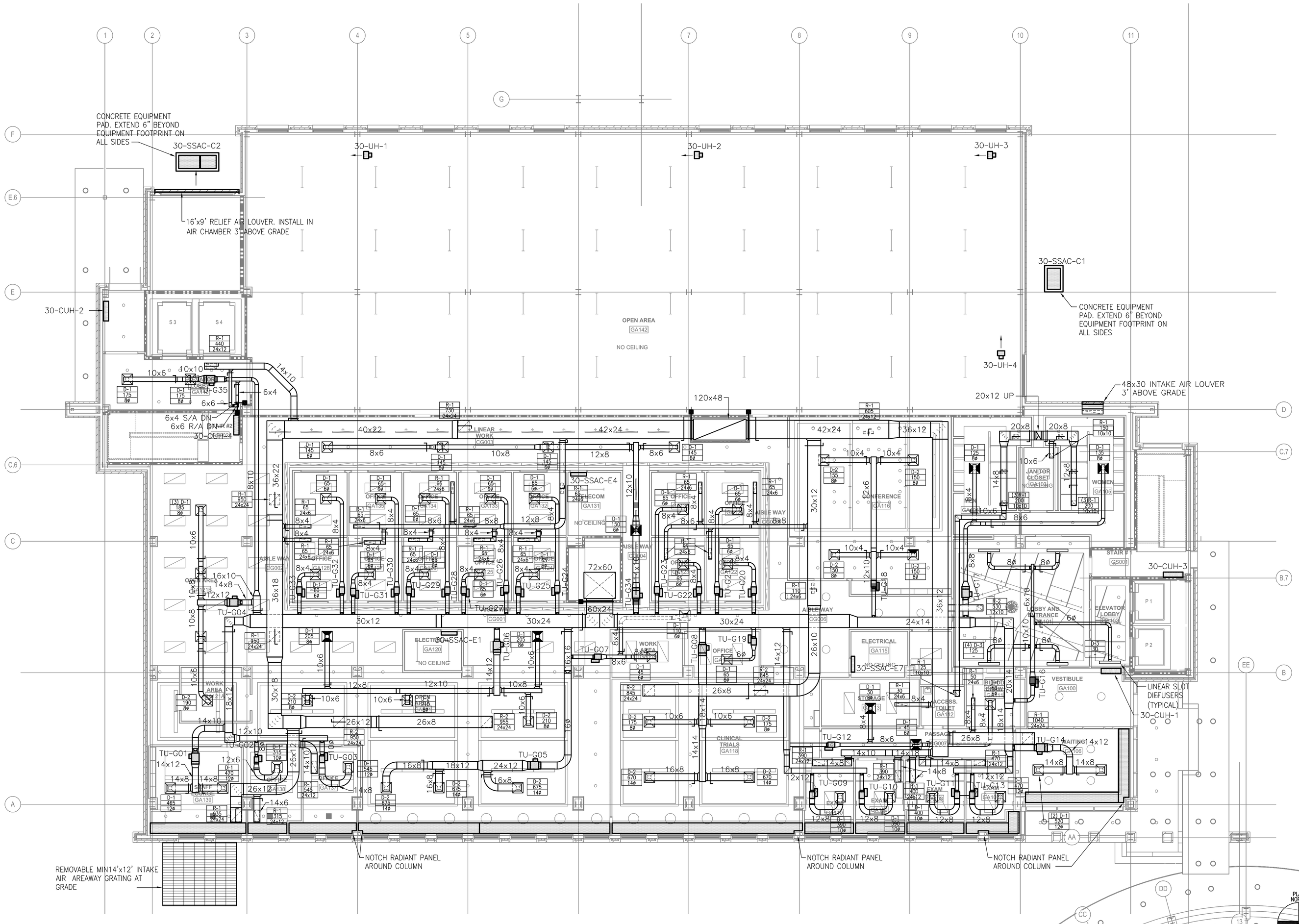

1 Ground Floor Plan - HVAC Ductwork

SCALE: 1/8"=1'-0"

KEY PLAN

FOR CONSTRUCTION
FULLY SPRINKLERED

Revisions:	Date

CONSULTANTS:

HDR

HDR Architecture, Inc.

1101 King Street | Suite 400 | Alexandria, Virginia 22314-2944 | 703.518.8500

ARCHITECT/ENGINEERS:

ARCHITECTURE
ENGINEERING
INTERIOR DESIGN
DESIGN/BUILD

ASTORINO

227 Fort Pitt Boulevard Pittsburgh Pennsylvania 15222
TEL 412 765 3700 FAX 412 765 3711 www.astorino.com

Drawing Title: **Ground Floor Plan HVAC Ductwork**

Approved: Project Director

Project Title: **VA CARES CONSOLIDATION VAMC, PITTSBURGH, PA RESEARCH OFFICE BLDG.**

Location: **VAPHS UNIVERSITY DRIVE**

Date: **08-18-10** | Checked: **JS** | Drawn: **RAN**

Project Number: **646CA2500R**

Building Number: **30**

Drawing Number: **MH1-111**

Dwg. -- of --

Office of Facilities Management

Department of Veterans Affairs

VA FORM 08-6231, OCT 1978

P:\Project\2005425.00\CAD\UNIVERSITY DRIVE\Research Office Building\HVAC\MH1-111.dwg J5480 06/22/10 ; 10:43:15

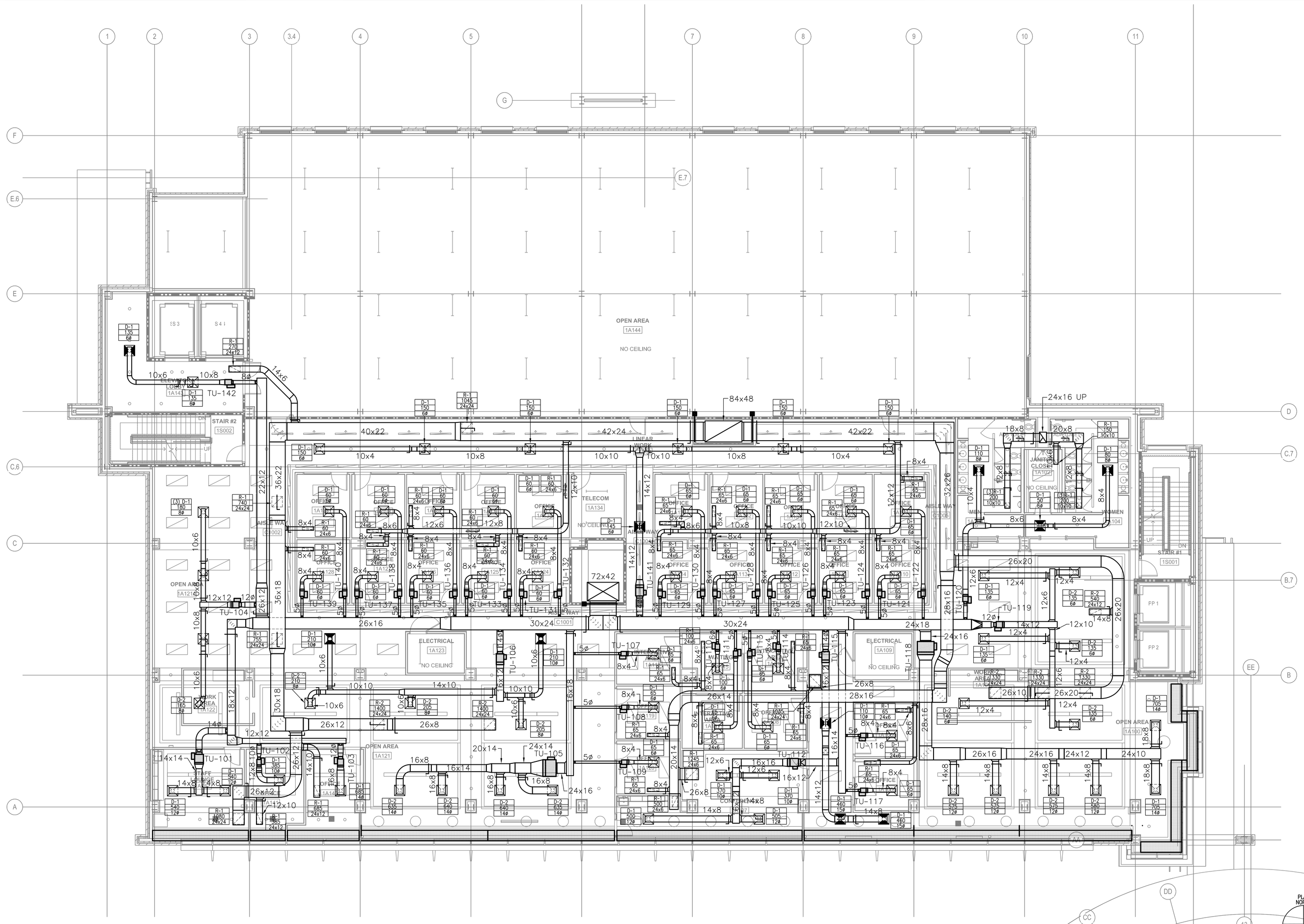

1 First Floor Plan - HVAC Ductwork

SCALE: 1/8"=1'-0"

KEY PLAN

FOR CONSTRUCTION
FULLY SPRINKLERED

Revisions:	Date

CONSULTANTS:

HDR

HDR Architecture, Inc.

1101 King Street | Suite 400 | Alexandria, Virginia 22314-2944 | 703.518.8500

ARCHITECT/ENGINEERS:

ARCHITECTURE
ENGINEERING
INTERIOR DESIGN
DESIGN/BUILD

ASTORINO

227 Fort Pitt Boulevard Pittsburgh Pennsylvania 15222
TEL 412 765 1700 FAX 412 765 1711 www.astorino.com

Drawing Title
First Floor Plan HVAC Ductwork

Approved: Project Director

Project Title
VA CARES CONSOLIDATION VAMC, PITTSBURGH, PA RESEARCH OFFICE BLDG.

Location
VAPHS UNIVERSITY DRIVE

Date: **08-18-10** | Checked: **JS** | Drawn: **RAN**

Project Number: **646CA2500R**

Building Number: **30**

Drawing Number: **MH1-121**

Dwg. -- of --

Office of Facilities Management

Department of Veterans Affairs

VA FORM 08-6231, OCT 1978

P:\Project\20050425.00\CAD\UNIVERSITY DRIVE\Research Office Building\HVAC\MH1-121.dwg JS480 06/18/10 ; 14:24:21

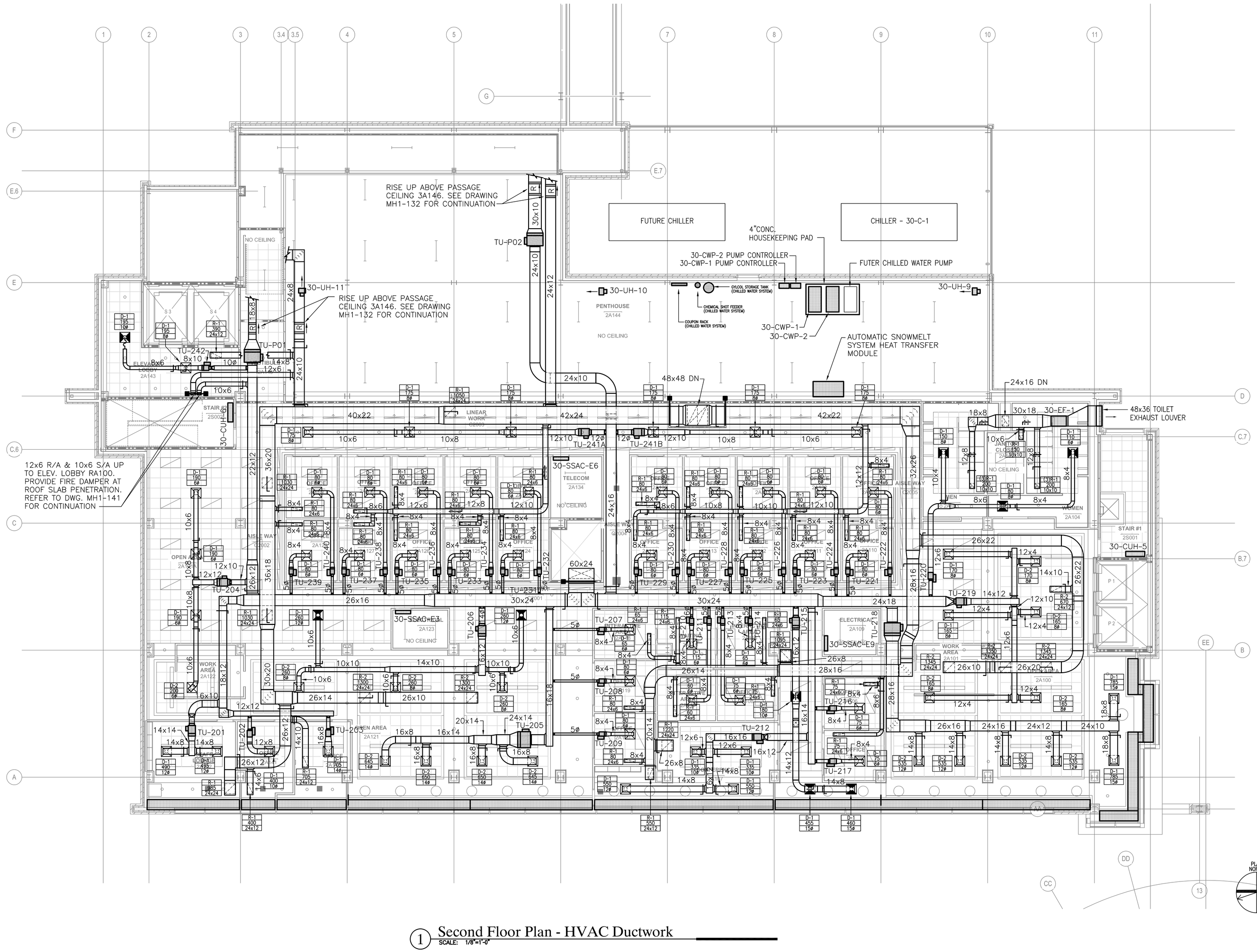

1 Second Floor Plan - HVAC Ductwork

SCALE: 1/8"=1'-0"

KEY PLAN

FOR CONSTRUCTION
FULLY SPRINKLERED

Revisions:	Date

CONSULTANTS:

HDR

HDR Architecture, Inc.

1101 King Street | Suite 400 | Alexandria, Virginia 22314-2944 | 703.518.8500

ARCHITECT/ENGINEERS:

ARCHITECTURE ENGINEERING INTERIOR DESIGN DESIGN/BUILD

ASTORINO

227 Fort Pitt Boulevard Pittsburgh Pennsylvania 15222
TEL 412 765 3700 FAX 412 765 3711 www.astorino.com

Drawing Title	Second Floor Plan HVAC Ductwork
Approved: Project Director	
Project Title	VA CARES CONSOLIDATION VAMC, PITTSBURGH, PA RESEARCH OFFICE BLDG.
Project Number	646CA2500R
Building Number	30
Location	VAPHS UNIVERSITY DRIVE
Date	08-18-10
Checked	JS
Drawn	RAN
Drawing Number	MH1-131
Dwg. -- of --	

Office of Facilities Management

Department of Veterans Affairs

VA FORM 08-6231, OCT 1978

P:\Project\2005425.00\CAD\UNIVERSITY DRIVE\Research Office Building\HVAC\MH1-131.dwg RNOLLA 08/18/10 : 13:49:23

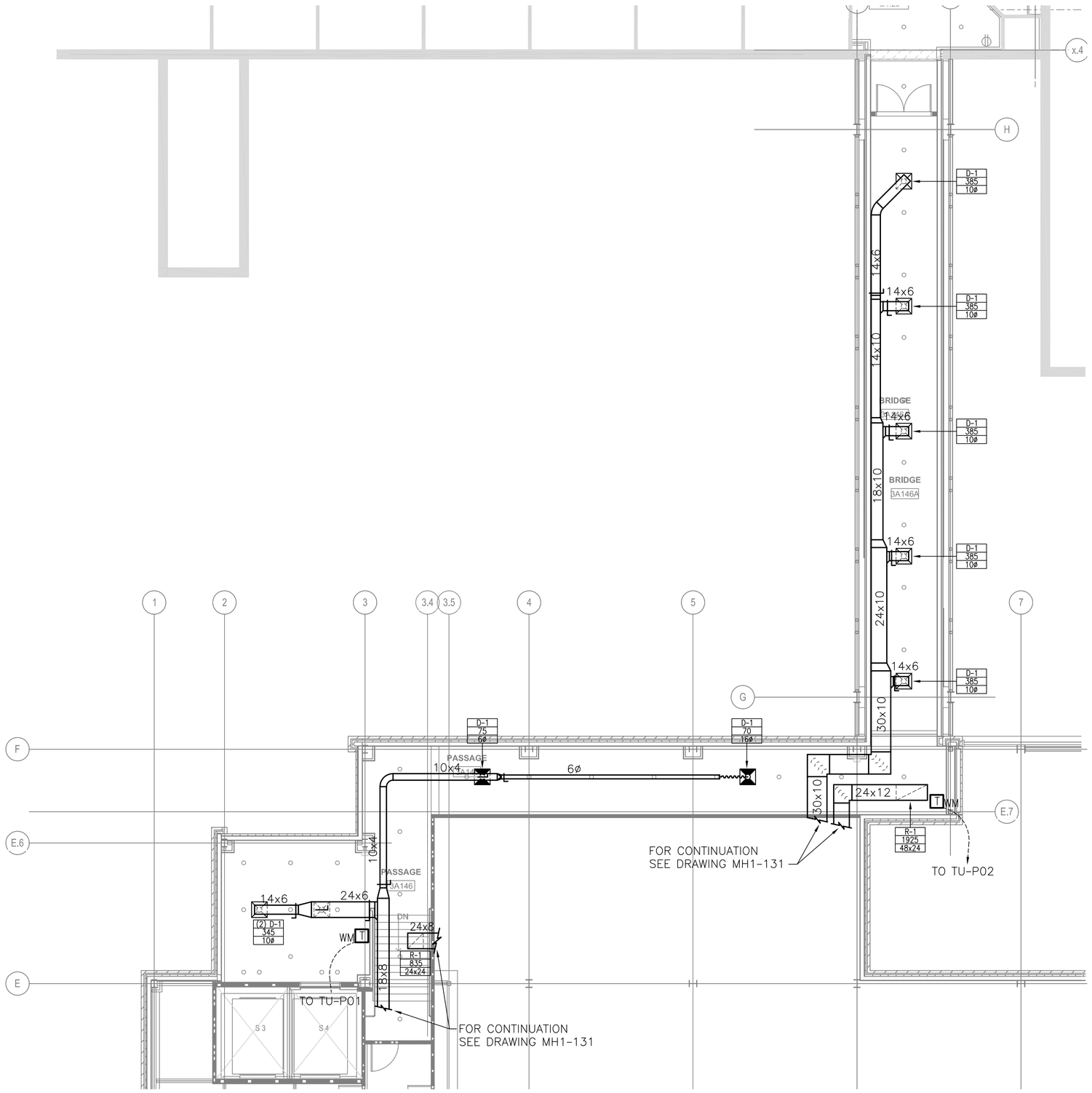

1 Bridge Plan - HVAC Ductwork
SCALE: 1/8"=1'-0"

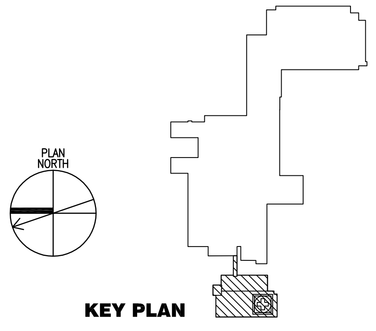

KEY PLAN

FOR CONSTRUCTION
FULLY SPRINKLERED

Revisions:	Date

CONSULTANTS:

HDR

HDR Architecture, Inc.

1101 King Street | Suite 400 | Alexandria, Virginia 22314-2944 | 703.518.8500

ARCHITECT/ENGINEERS:

ARCHITECTURE
ENGINEERING
INTERIOR DESIGN
DESIGN/BUILD

ASTORINO

227 Fort Pitt Boulevard Pittsburgh Pennsylvania 15222
TEL 412 765 1700 FAX 412 765 1711 www.astorino.com

Drawing Title
Bridge Plan
HVAC Ductwork

Approved: Project Director

Project Title
VA CARES CONSOLIDATION
VAMC, PITTSBURGH, PA
RESEARCH OFFICE BLDG.

Location
VAPHS UNIVERSITY DRIVE

Date **08-18-10** | Checked **JS** | Drawn **RAN**

Project Number **646CA2500R**

Building Number **30**

Drawing Number **MH1-132**

Dwg. -- of --

Office of Facilities Management

Department of Veterans Affairs

VA FORM 08-6231, OCT 1978

P:\Project\20054235.00\CAD\UNIVERSITY DRIVE\Research Office Building\HVAC\MH1-132.dwg JSABO 06/18/10 : 14:35:15

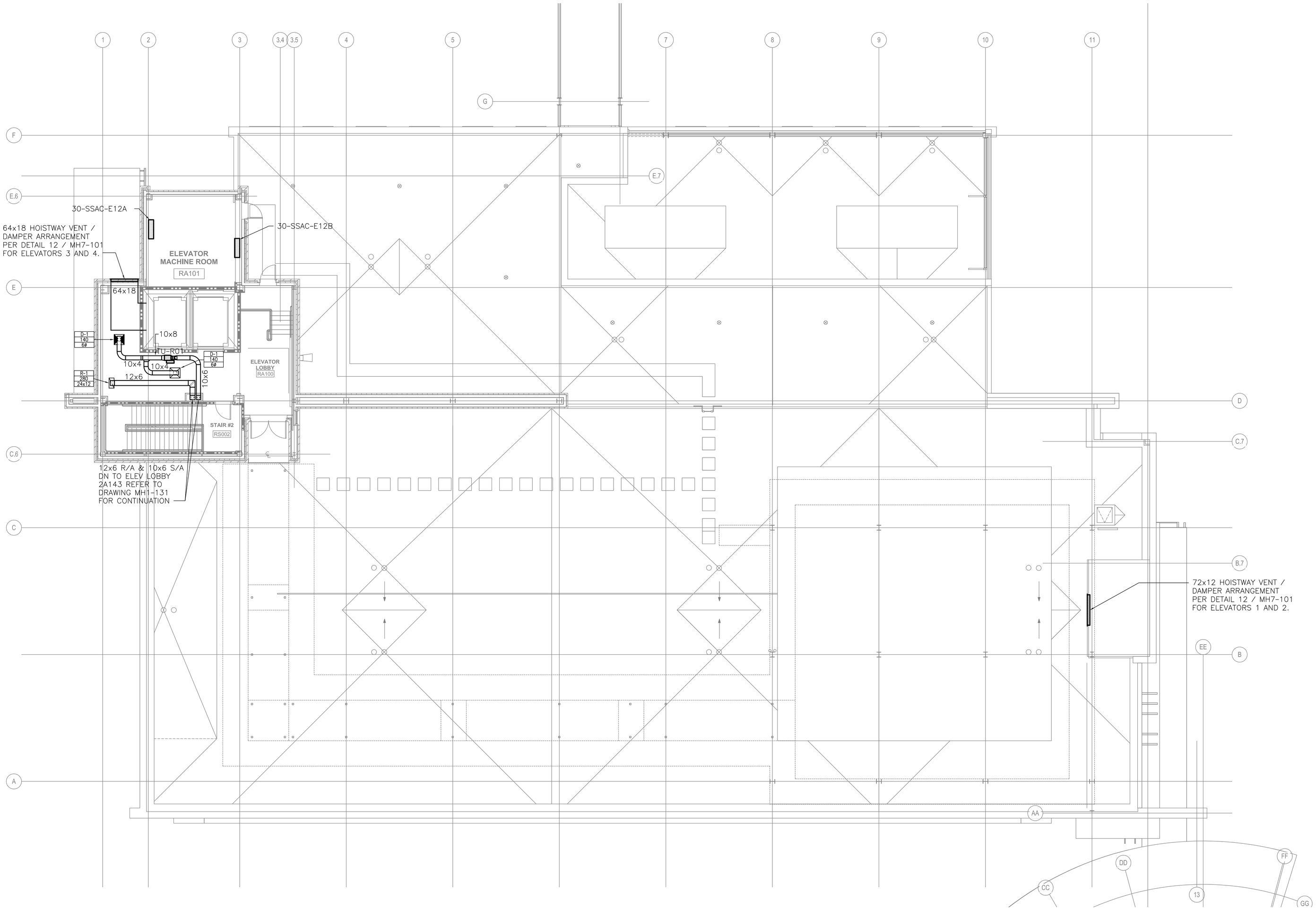

1 Roof Plan - HVAC Ductwork
SCALE: 1/8"=1'-0"

KEY PLAN

FOR CONSTRUCTION
FULLY SPRINKLERED

Revisions:	Date

CONSULTANTS:

HDR Architecture, Inc.
1101 King Street | Suite 400 | Alexandria, Virginia 22314-2944 | 703.518.8500

ARCHITECT/ENGINEERS:

ARCHITECTURE ENGINEERING INTERIOR DESIGN DESIGN/BUILD
ASTORINO
227 Fort Pitt Boulevard Pittsburgh Pennsylvania 15222
TEL 412 765 1700 FAX 412 765 1711 www.astorino.com

Drawing Title: **Roof Plan HVAC Ductwork**

Approved: Project Director

Project Title: **VA CARES CONSOLIDATION VAMC, PITTSBURGH, PA RESEARCH OFFICE BLDG.**

Location: **VAPHS UNIVERSITY DRIVE**

Date: **08-18-10** | Checked: **JS** | Drawn: **RAN**

Project Number: **646CA2500R**

Building Number: **30**

Drawing Number: **MH1-141**
Dwg. -- of --

Office of Facilities Management
Department of Veterans Affairs

VA FORM 08-6231, OCT 1978

P:\Project\20054250.00\CAD\UNIVERSITY DRIVE\Research Office Building\HVAC\MH1-141.dwg M8ESHENGH 10/30/09 ; 09:56:09

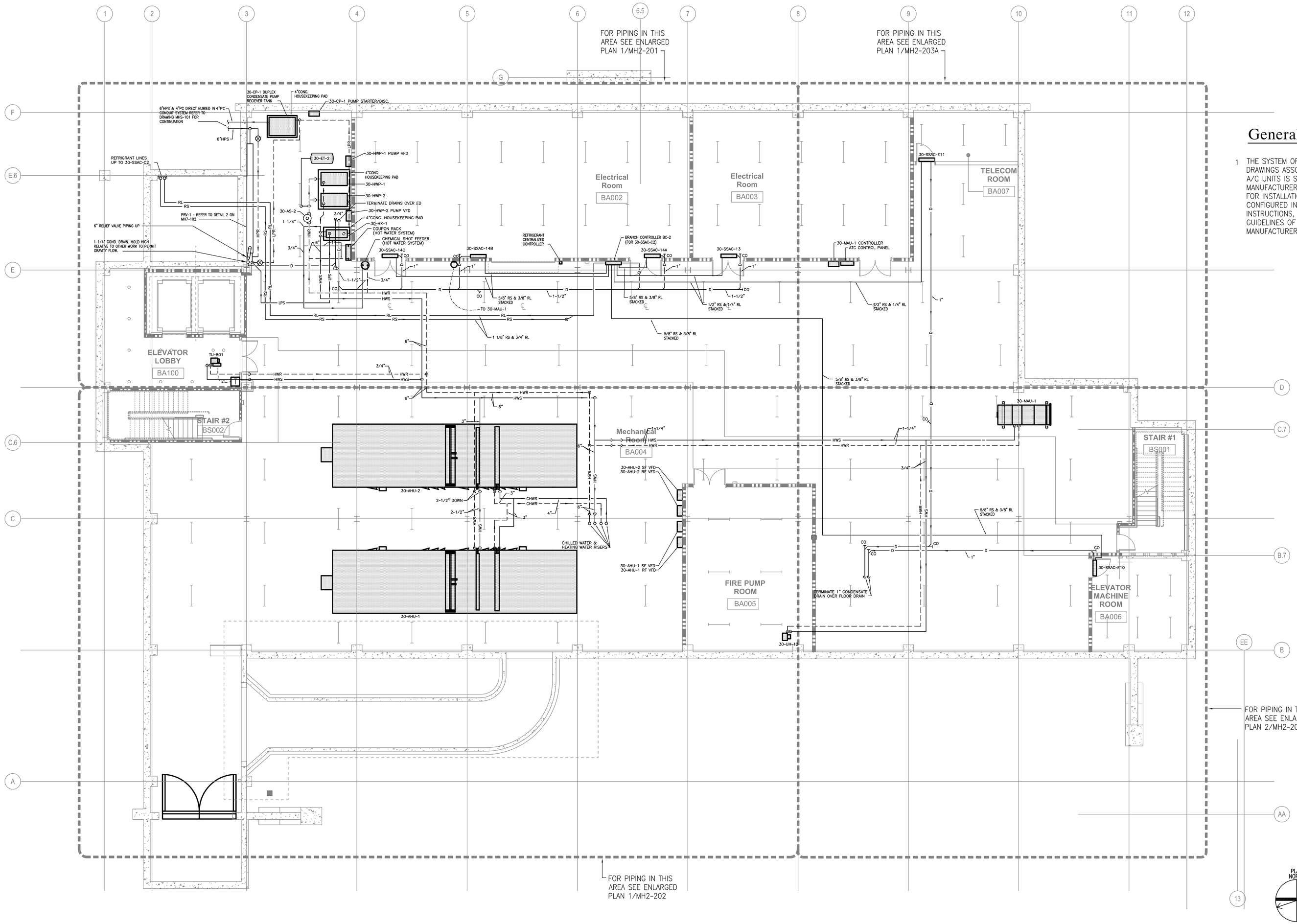

1 Basement Floor Plan - HVAC Piping
SCALE: 1/8"=1'-0"

General Notes:

1 THE SYSTEM OF PIPING SHOWN ON THESE DRAWINGS ASSOCIATED WITH THE SPLIT SYSTEM A/C UNITS IS SPECIFIC TO THE BASIS OF DESIGN MANUFACTURER. THE PIPING SYSTEM REQUIRED FOR INSTALLATION SHALL BE SIZED AND CONFIGURED IN ACCORDANCE WITH INSTRUCTIONS, RECOMMENDATIONS, AND GUIDELINES OF THE SELECTED SYSTEM MANUFACTURER.

FOR CONSTRUCTION
FULLY SPRINKLERED

Revisions:	Date

CONSULTANTS:

HDR Architecture, Inc.
1101 King Street | Suite 400 | Alexandria, Virginia 22314-2944 | 703.518.8500

ARCHITECT/ENGINEERS:

ARCHITECTURE ENGINEERING INTERIOR DESIGN DESIGN/BUILD
ASTORINO
227 Fort Pitt Boulevard Pittsburgh Pennsylvania 15222
TEL 412 765 3700 FAX 412 765 1731 www.astorino.com

Drawing Title	Basement Floor Plan HVAC Piping
Approved: Project Director	
Project Title	VA CARES CONSOLIDATION VAMC, PITTSBURGH, PA RESEARCH OFFICE BLDG.
Location	VAPHS UNIVERSITY DRIVE
Date	08-18-10
Checked	JS
Drawn	RAN
Project Number	646CA2500R
Building Number	30
Drawing Number	MH1-201
Dwg. -- of --	

Office of Facilities Management
Department of Veterans Affairs

VA FORM 08-6231, OCT 1978

P:\Project\200542500\CAD\UNIVERSITY DRIVE\Research Office Building\HVAC\MH1-201.dwg JSABO 06/18/10 - 14:42:34

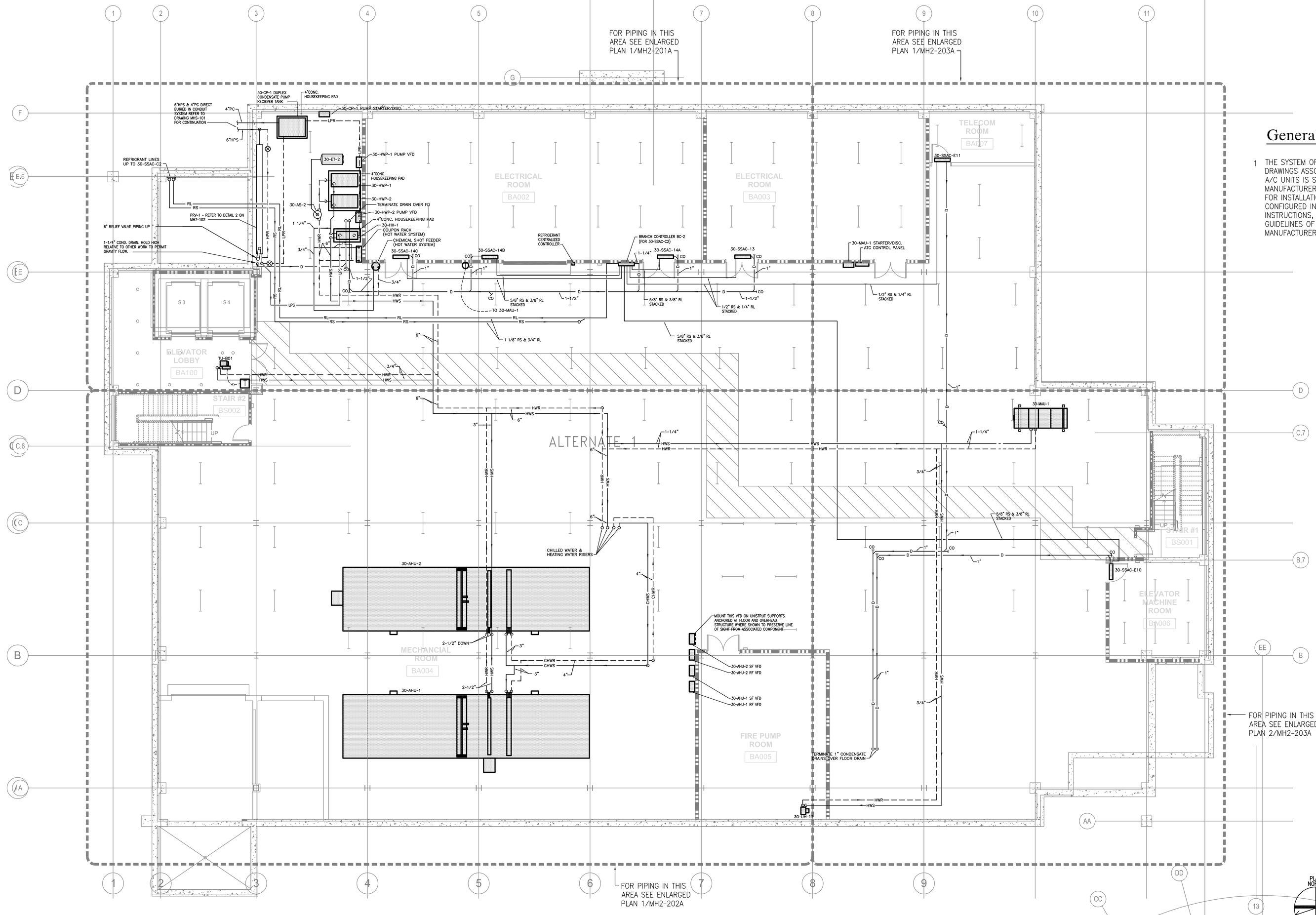

General Notes:

1 THE SYSTEM OF PIPING SHOWN ON THESE DRAWINGS ASSOCIATED WITH THE SPLIT SYSTEM A/C UNITS IS SPECIFIC TO THE BASIS OF DESIGN MANUFACTURER. THE PIPING SYSTEM REQUIRED FOR INSTALLATION SHALL BE SIZED AND CONFIGURED IN ACCORDANCE WITH INSTRUCTIONS, RECOMMENDATIONS, AND GUIDELINES OF THE SELECTED SYSTEM MANUFACTURER.

1 Basement Floor Plan - HVAC Piping - Alternate #1
SCALE: 1/8"=1'-0"

FOR CONSTRUCTION
FULLY SPRINKLERED

CONSULTANTS:

HDR Architecture, Inc.
1101 King Street | Suite 400 | Alexandria, Virginia 22314-2944 | 703.518.8500

ARCHITECT/ENGINEERS:

ARCHITECTURE ENGINEERING INTERIOR DESIGN DESIGN/BUILD
ASTORINO
227 Fort Pitt Boulevard Pittsburgh Pennsylvania 15222
TEL 412 765 1700 FAX 412 765 1711 www.astorino.com

Revisions:	Date

Drawing Title: **Basement Floor Plan HVAC Piping - Alternate #1**

Approved: Project Director

Project Title: **VA CARES CONSOLIDATION VAMC, PITTSBURGH, PA RESEARCH OFFICE BLDG.**

Location: **VAPHS UNIVERSITY DRIVE**

Date: **08-18-10** | Checked: **JS** | Drawn: **RAN**

Project Number: **646CA2500R**

Building Number: **30**

Drawing Number: **MH1-201A**

Dwg: -- of --

Office of Facilities Management

Department of Veterans Affairs

VA FORM 08-6231, OCT 1978

P:\Project\20054225.00\CAD\UNIVERSITY DRIVE\Research Office Building\HVAC\MH1-201A.dwg MBESHENCH 11/05/09 ; 14:37:01

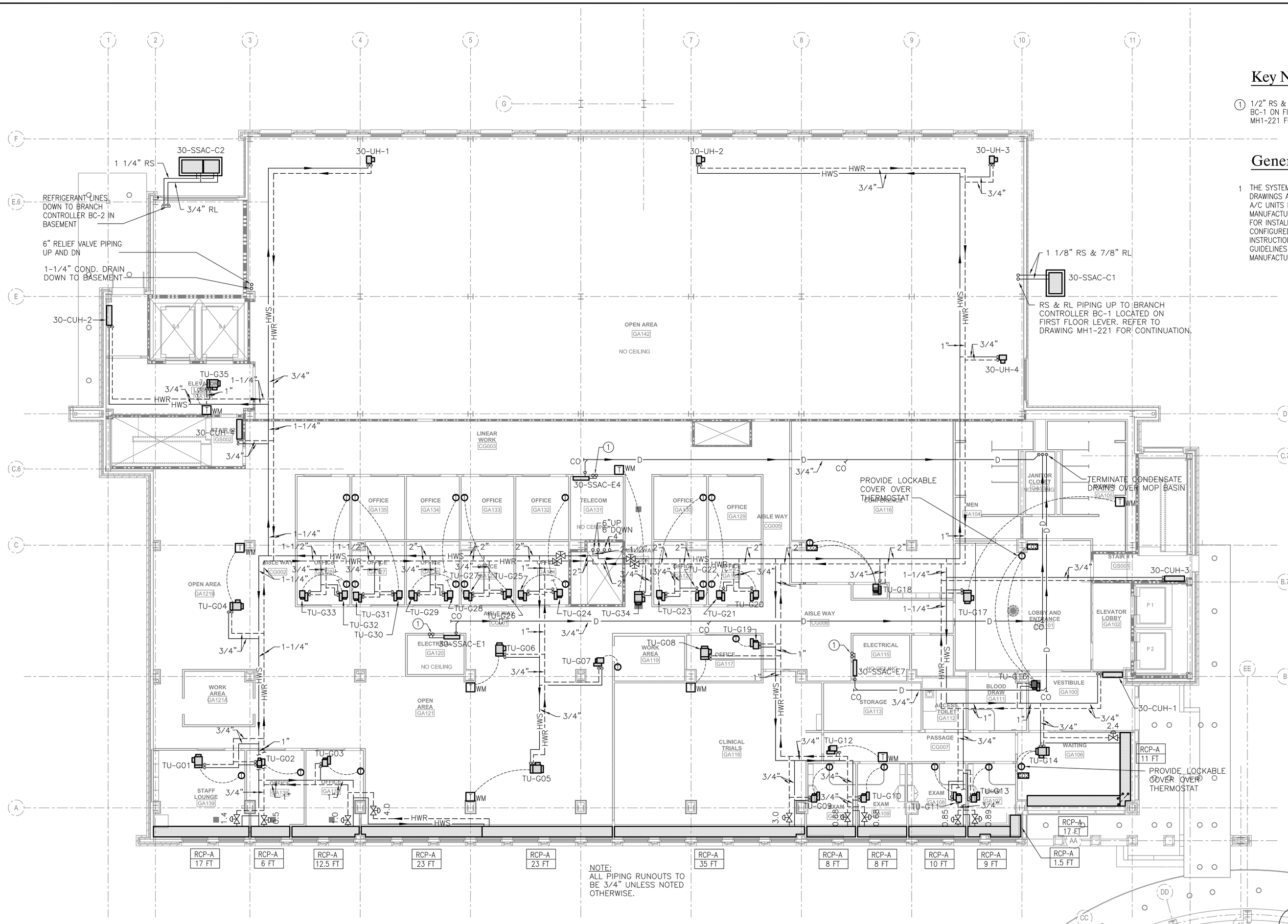

NOTE:
ALL PIPING RUNOUTS TO BE 3/4" UNLESS NOTED OTHERWISE.

Key Notes:

1. 1/2" RS & 1/4" RL UP TO BRANCH CONTROLLER BC-1 ON FIRST FLOOR LEVEL. REFER TO DRAWING MH1-221 FOR PIPING CONTINUATION.

General Notes:

1. THE SYSTEM OF PIPING SHOWN ON THESE DRAWINGS ASSOCIATED WITH THE SPLIT SYSTEM A/C UNITS IS SPECIFIC TO THE BASIS OF DESIGN MANUFACTURER. THE PIPING SYSTEM REQUIRED FOR INSTALLATION SHALL BE SIZED AND CONFIGURED IN ACCORDANCE WITH INSTRUCTIONS, RECOMMENDATIONS, AND GUIDELINES OF THE SELECTED SYSTEM MANUFACTURER.

1 Ground Floor Plan - HVAC Piping

SCALE: 1/8"=1'-0"

KEY PLAN

FOR CONSTRUCTION
FULLY SPRINKLERED

Revisions:	Date

CONSULTANTS:

HDR Architecture, Inc.
1101 King Street | Suite 400 | Alexandria, Virginia 22314-2944 | 703.518.8500

ARCHITECT/ENGINEERS:

ARCHITECTURE ENGINEERING INTERIOR DESIGN DESIGN/BUILD
ASTORINO
227 Fort Pitt Boulevard Pittsburgh Pennsylvania 15222
TEL 412 765 1700 FAX 412 765 1711 www.astorino.com

Drawing Title: **Ground Floor Plan HVAC Piping**

Approved: Project Director

Project Title: **VA CARES CONSOLIDATION VAMC, PITTSBURGH, PA RESEARCH OFFICE BLDG.**

Location: **VAPHS UNIVERSITY DRIVE**

Date: **08-18-10** | Checked: **JS** | Drawn: **RAN**

Project Number: **646CA2500R**
Building Number: **30**
Drawing Number: **MH1-211**
Dwg: -- of --

Office of Facilities Management
Department of Veterans Affairs

VA FORM 08-6231, OCT 1978

P:\Project\2005-426.00\CAD\UNIVERSITY DRIVE\Research Office Building\HVAC\MH1-211.dwg MBESHENCH 11/05/09 - 13:28:36

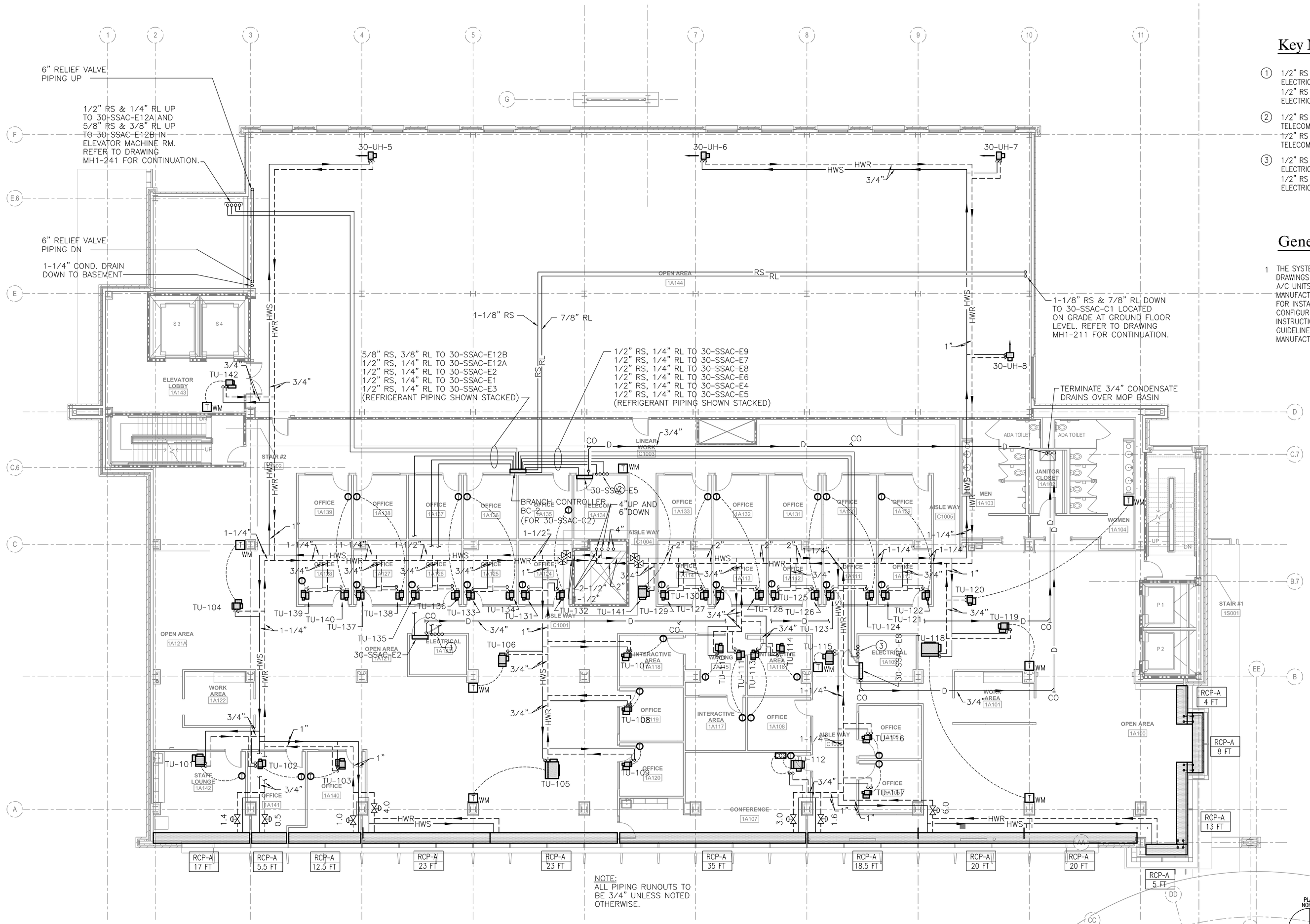

NOTE:
ALL PIPING RUNOUTS TO BE 3/4" UNLESS NOTED OTHERWISE.

1 First Floor Plan - HVAC Piping
SCALE: 1/8"=1'-0"

Key Notes:

1. 1/2" RS & 1/4" RL DOWN TO 30-SSAC-E1 IN ELECTRIC ROOM GA120, DRAWING MH1-211 AND 1/2" RS & 1/4" RL UP TO 30-SSAC-E3 IN ELECTRIC ROOM 2A123, DRAWING MH1-231.
2. 1/2" RS & 1/4" RL DOWN TO 30-SSAC-E4 IN TELECOM ROOM GA131, DRAWING MH1-211 AND 1/2" RS & 1/4" RL UP TO 30-SSAC-E6 IN TELECOM ROOM 2A134, DRAWING MH1-231.
3. 1/2" RS & 1/4" RL DOWN TO 30-SSAC-E7 IN ELECTRIC ROOM GA115, DRAWING MH1-211 AND 1/2" RS & 1/4" RL UP TO 30-SSAC-E9 IN ELECTRIC ROOM 2A109, DRAWING MH1-231.

General Notes:

1 THE SYSTEM OF PIPING SHOWN ON THESE DRAWINGS ASSOCIATED WITH THE SPLIT SYSTEM A/C UNITS IS SPECIFIC TO THE BASIS OF DESIGN MANUFACTURER. THE PIPING SYSTEM REQUIRED FOR INSTALLATION SHALL BE SIZED AND CONFIGURED IN ACCORDANCE WITH INSTRUCTIONS, RECOMMENDATIONS, AND GUIDELINES OF THE SELECTED SYSTEM MANUFACTURER.

KEY PLAN

FOR CONSTRUCTION
FULLY SPRINKLERED

Revisions:	Date

CONSULTANTS:

HDR Architecture, Inc.
1101 King Street | Suite 400 | Alexandria, Virginia 22314-2944 | 703.518.8500

ARCHITECT/ENGINEERS:

ARCHITECTURE ENGINEERING INTERIOR DESIGN DESIGN/BUILD
ASTORINO
227 Fort Pitt Boulevard Pittsburgh Pennsylvania 15222
TEL 412 765 3700 FAX 412 765 1711 www.astorino.com

Drawing Title: **First Floor Plan HVAC Piping**

Approved: Project Director

Project Title: **VA CARES CONSOLIDATION VAMC, PITTSBURGH, PA RESEARCH OFFICE BLDG.**

Project Number: **646CA2500R**

Building Number: **30**

Location: **VAPHS UNIVERSITY DRIVE**

Date: **08-18-10** | Checked: **JS** | Drawn: **RAN**

Drawing Number: **MH1-221**
Dwg. -- of --

Office of Facilities Management
Department of Veterans Affairs

VA FORM 08-6231, OCT 1978

P:\Project\200545250\CAD\UNIVERSITY DRIVE\Research Office Building\HVAC\MH1-221.dwg RNOLLA 08/18/10 - 11:31:17

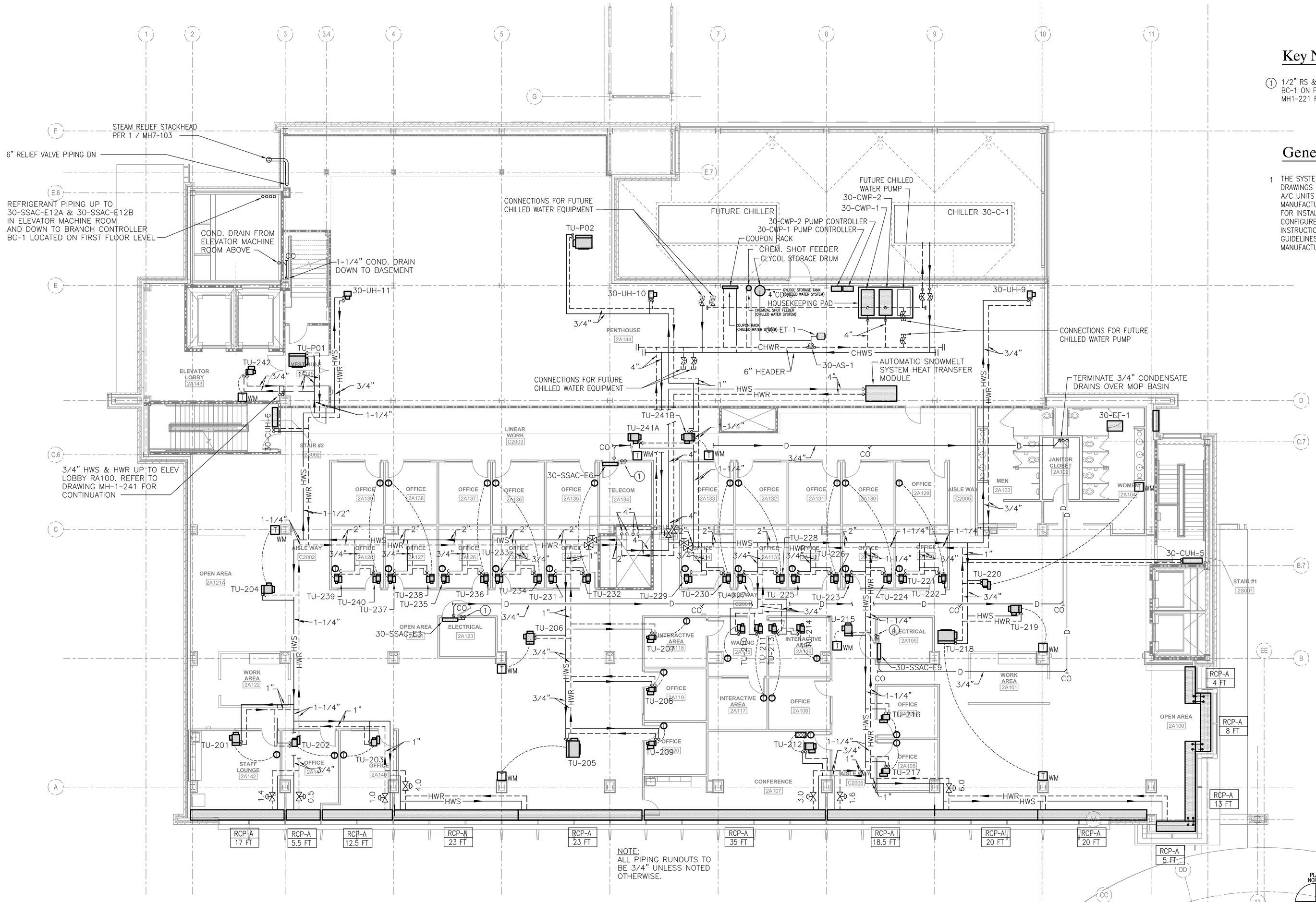

1 Second Floor Plan - HVAC Piping
SCALE: 1/8"=1'-0"

Key Notes:

1 1/2" RS & 1/4" RL DOWN TO BRANCH CONTROLLER BC-1 ON FIRST FLOOR LEVEL. REFER TO DRAWING MH1-221 FOR PIPING CONTINUATION.

General Notes:

1 THE SYSTEM OF PIPING SHOWN ON THESE DRAWINGS ASSOCIATED WITH THE SPLIT SYSTEM A/C UNITS IS SPECIFIC TO THE BASIS OF DESIGN MANUFACTURER. THE PIPING SYSTEM REQUIRED FOR INSTALLATION SHALL BE SIZED AND CONFIGURED IN ACCORDANCE WITH INSTRUCTIONS, RECOMMENDATIONS, AND GUIDELINES OF THE SELECTED SYSTEM MANUFACTURER.

FOR CONSTRUCTION
FULLY SPRINKLERED

Revisions:	Date

CONSULTANTS:

HDR Architecture, Inc.
1101 King Street | Suite 400 | Alexandria, Virginia 22314-2944 | 703.518.8500

ARCHITECT/ENGINEERS:

ARCHITECTURE ENGINEERING INTERIOR DESIGN DESIGN/BUILD
ASTORINO
227 Fort Pitt Boulevard Pittsburgh Pennsylvania 15222
TEL 412 765 1700 FAX 412 765 1711 www.astorino.com

Drawing Title: **Second Floor Plan HVAC Piping**

Approved: Project Director

Project Title: **VA CARES CONSOLIDATION VAMC, PITTSBURGH, PA RESEARCH OFFICE BLDG.**

Location: **VAPHS UNIVERSITY DRIVE**

Date: **08-18-10** | Checked: **JS** | Drawn: **RAN**

Project Number: **646CA2500R**
Building Number: **30**
Drawing Number: **MH1-231**
Dwg: -- of --

Office of Facilities Management
Department of Veterans Affairs

VA FORM 08-6231, OCT 1978

P:\Project\3005425.00\CAD\UNIVERSITY DRIVE\Research Office Building\HVAC\MH1-231.dwg JS&BD 06/18/10 ; 14:51:19

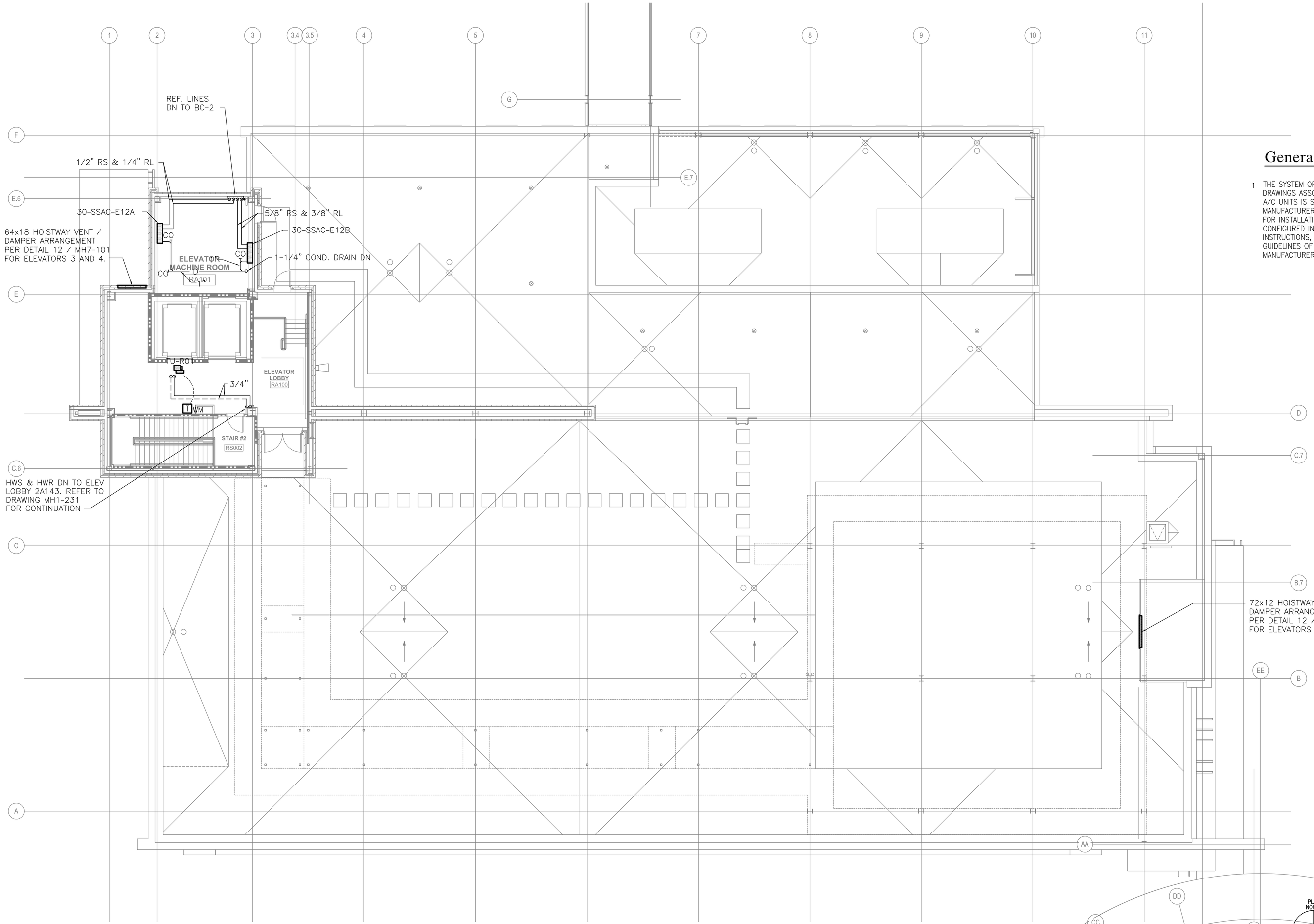

1 Roof Plan - HVAC Piping
SCALE: 1/8"=1'-0"

General Notes:

1 THE SYSTEM OF PIPING SHOWN ON THESE DRAWINGS ASSOCIATED WITH THE SPLIT SYSTEM A/C UNITS IS SPECIFIC TO THE BASIS OF DESIGN MANUFACTURER. THE PIPING SYSTEM REQUIRED FOR INSTALLATION SHALL BE SIZED AND CONFIGURED IN ACCORDANCE WITH INSTRUCTIONS, RECOMMENDATIONS, AND GUIDELINES OF THE SELECTED SYSTEM MANUFACTURER.

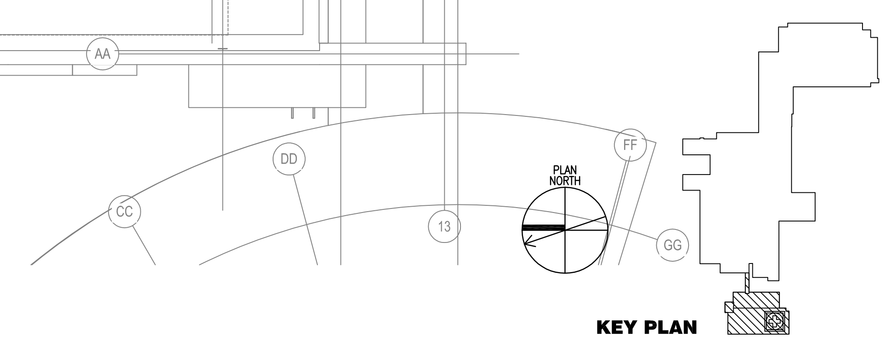

FOR CONSTRUCTION
FULLY SPRINKLERED

Revisions:	Date

CONSULTANTS:

HDR Architecture, Inc.
1101 King Street | Suite 400 | Alexandria, Virginia 22314-2944 | 703.518.8500

ARCHITECT/ENGINEERS:

ARCHITECTURE ENGINEERING INTERIOR DESIGN DESIGN/BUILD
ASTORINO
227 Fort Pitt Boulevard Pittsburgh Pennsylvania 15222
TEL 412.765.1700 FAX 412.765.1711 www.astorino.com

Drawing Title: **Roof Plan HVAC Piping**

Approved: Project Director

Project Title: **VA CARES CONSOLIDATION VAMC, PITTSBURGH, PA RESEARCH OFFICE BLDG.**

Location: **VAPHS UNIVERSITY DRIVE**

Date: **08-18-10** | Checked: **JS** | Drawn: **RAN**

Project Number: **646CA2500R**

Building Number: **30**

Drawing Number: **MH1-241**
Dwg. -- of --

Office of Facilities Management
Department of Veterans Affairs

VA FORM 08-6231, OCT 1978

P:\Project\20050425.00\CAD\UNIVERSITY DRIVE\Research Office Building\HVAC\MH1-241.dwg MBESHENICH 11/05/09 - 13:31:4

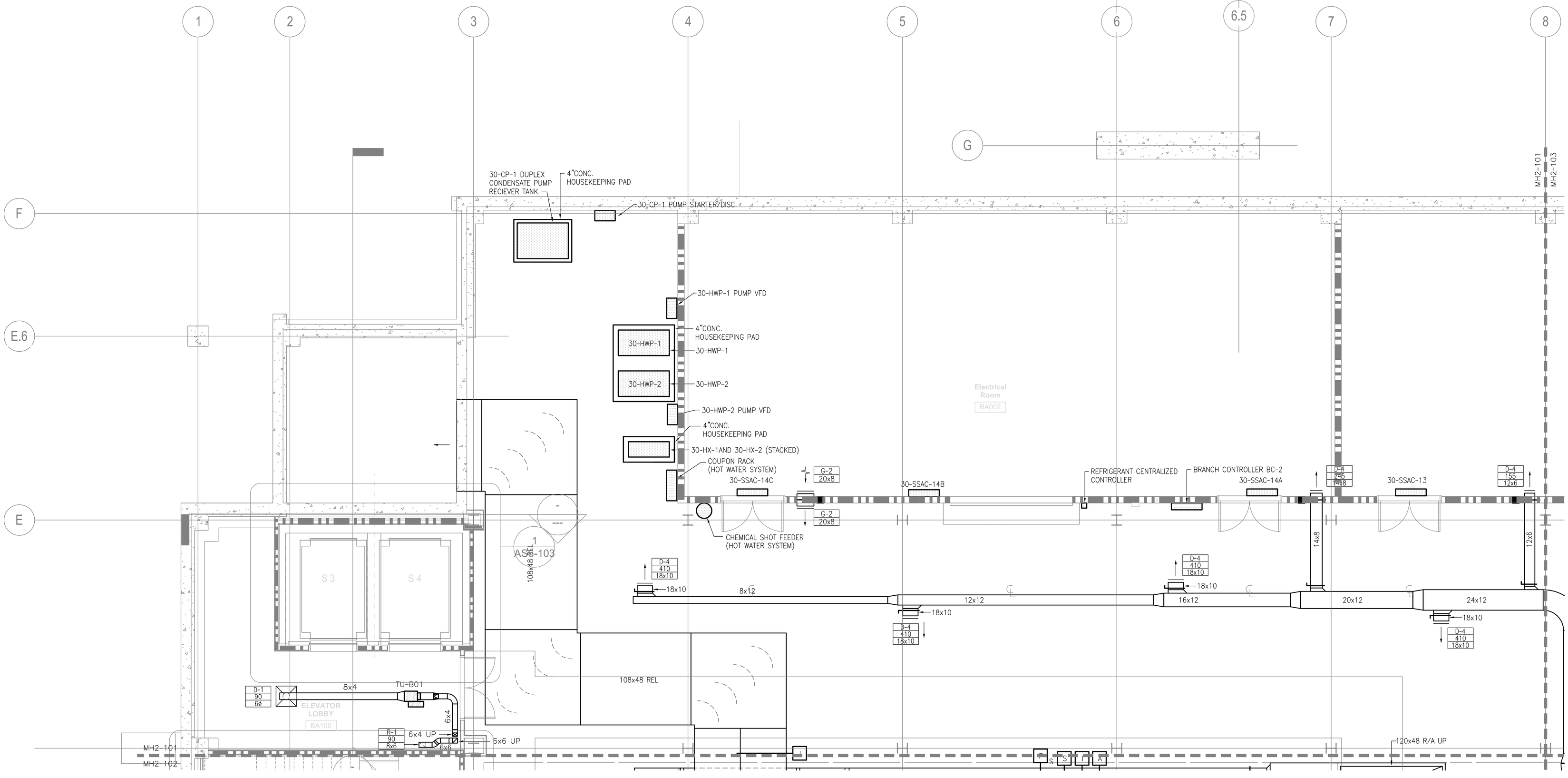

1 Enlarged Basement Floor Plan - HVAC Ductwork

SCALE: 1/4"=1'-0"

FOR CONSTRUCTION
FULLY SPRINKLERED

Revisions:	Date

CONSULTANTS:

HDR

HDR Architecture, Inc.

1101 King Street | Suite 400 | Alexandria, Virginia 22314-2944 | 703.518.8500

ARCHITECT/ENGINEERS:

ARCHITECTURE ENGINEERING INTERIOR DESIGN DESIGN/BUILD

ASTORINO

227 Fort Pitt Boulevard Pittsburgh Pennsylvania 15222
TEL 412 765 3700 FAX 412 765 3711 www.astorino.com

Drawing Title: **Enlarged Basement Floor Plan HVAC Ductwork**

Approved: Project Director

Project Title: **VA CARES CONSOLIDATION VAMC, PITTSBURGH, PA RESEARCH OFFICE BLDG.**

Location: **VAPHS UNIVERSITY DRIVE**

Date: **08-18-10** | Checked: **JS** | Drawn: **RAN**

Project Number: **646CA2500R**

Building Number: **30**

Drawing Number: **MH2-101**

Dwg. -- of --

Office of Facilities Management

Department of Veterans Affairs

VA FORM 08-6231, OCT 1978

P:\Project\2005425.00\CAD\UNIVERSITY DRIVE\Research Office Building\HVAC\MH2-101.dwg MBESHENCH 11/06/09 - 13:59:27

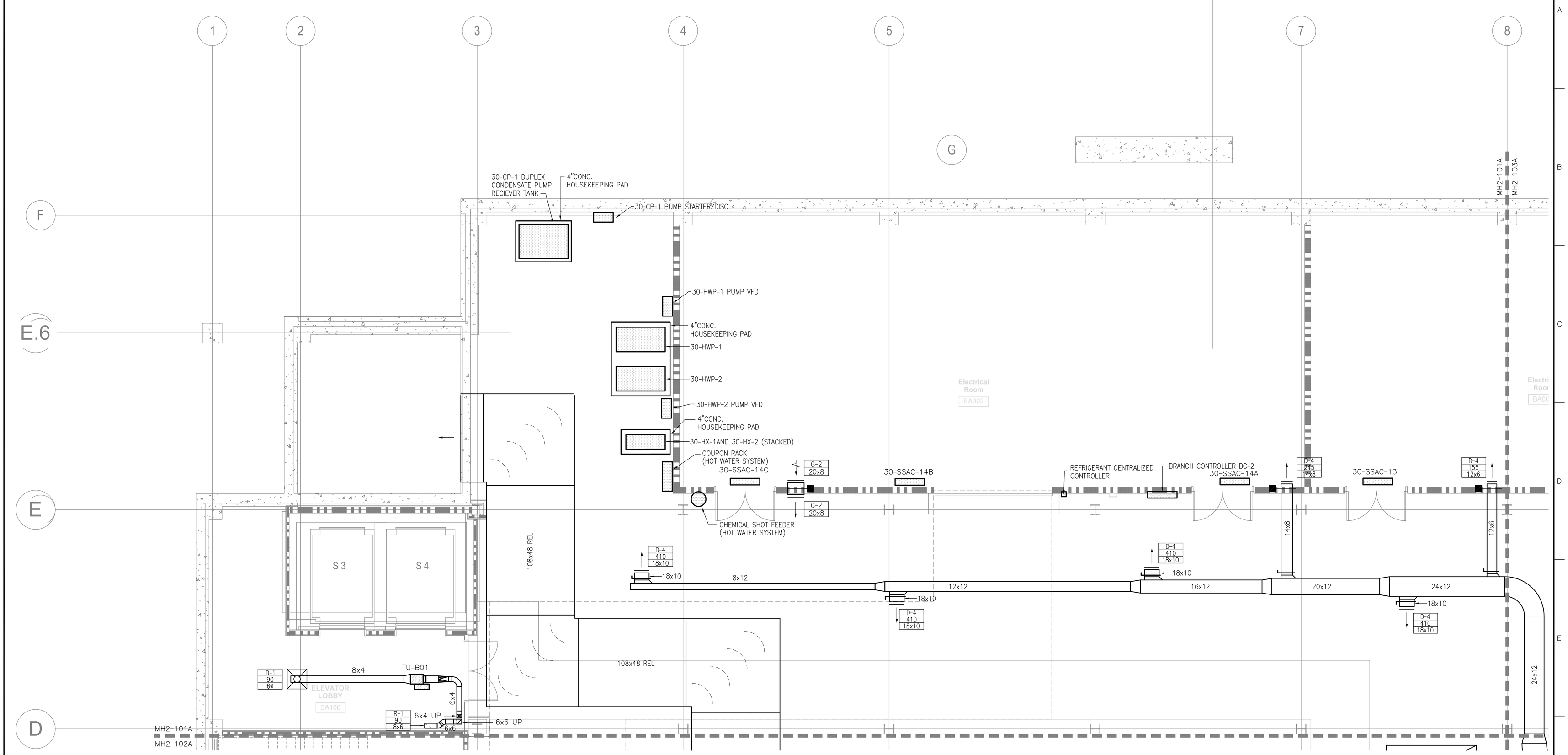

1 Enlarged Basement Floor Plan - HVAC Ductwork - Alternate #1

SCALE: 1/4"=1'-0"

FOR CONSTRUCTION
FULLY SPRINKLERED

Revisions:	Date

CONSULTANTS:

HDR

HDR Architecture, Inc.

1101 King Street | Suite 400 | Alexandria, Virginia 22314-2944 | 703.518.8500

ARCHITECT/ENGINEERS:

ARCHITECTURE ENGINEERING INTERIOR DESIGN DESIGN/BUILD

ASTORINO

227 Fort Pitt Boulevard Pittsburgh Pennsylvania 15222
TEL 412 765 3700 FAX 412 765 3711 www.astorino.com

Drawing Title: **Enlarged Basement Floor Plan HVAC Ductwork - Alternate #1**

Approved: Project Director

Project Title: **VA CARES CONSOLIDATION VAMC, PITTSBURGH, PA RESEARCH OFFICE BLDG.**

Location: **VAPHS UNIVERSITY DRIVE**

Date: **08-18-10** | Checked: **JS** | Drawn: **RAN**

Project Number: **646CA2500R**

Building Number: **30**

Drawing Number: **MH2-101A**

Dwg: -- of --

Office of Facilities Management

Department of Veterans Affairs

VA FORM 08-6231, OCT 1978

P:\Project\20054250.00\CAD\UNIVERSITY DRIVE\Research Office Building\HVAC\MH2-101A.dwg M8ESHENCH 11/06/09 - 13:59:53

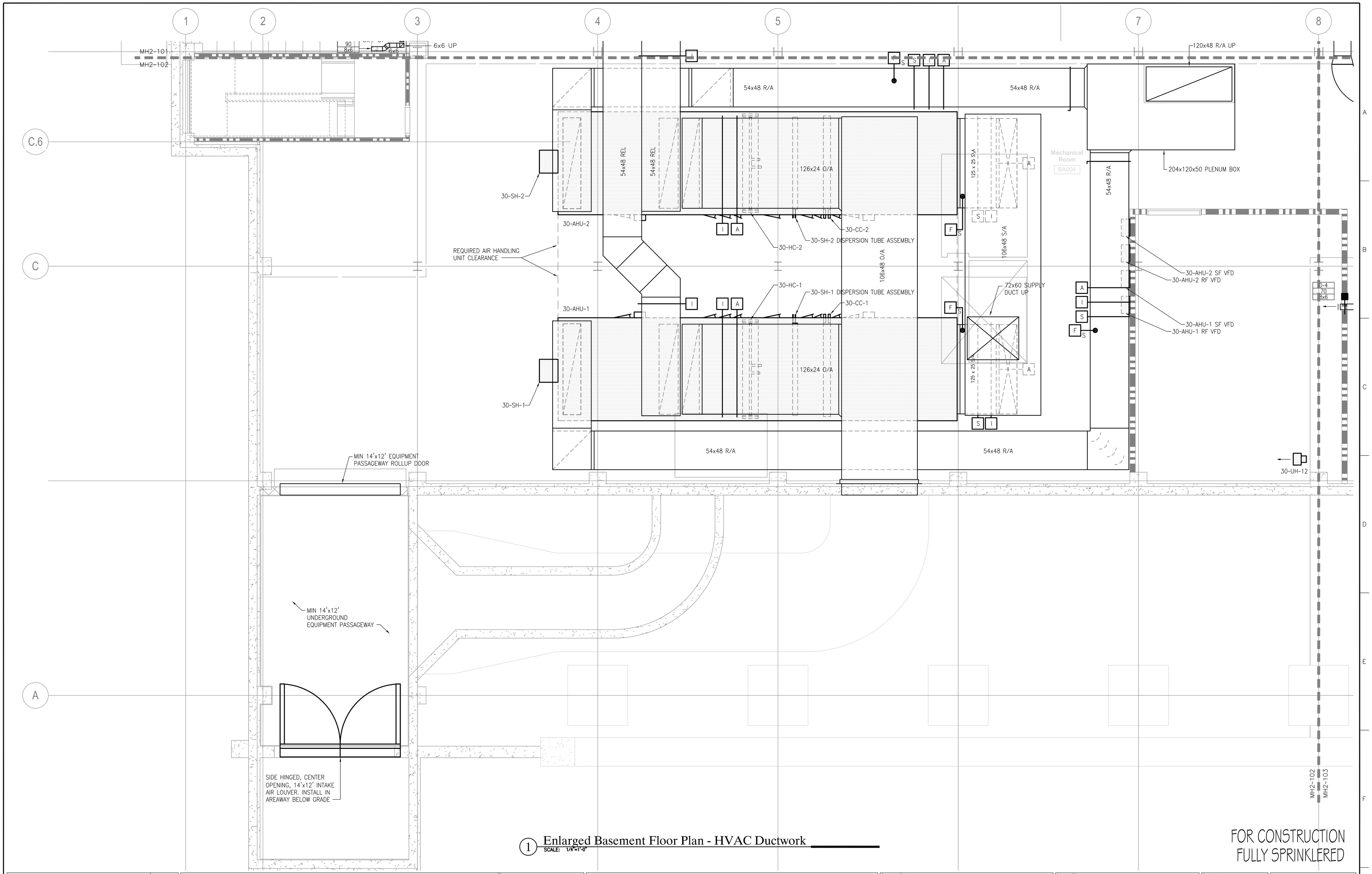

1 Enlarged Basement Floor Plan - HVAC Ductwork
SCALE: 1/4"=1'-0"

FOR CONSTRUCTION
FULLY SPRINKLERED

Revisions:	Date

CONSULTANTS:

HDR Architecture, Inc.
1101 King Street | Suite 400 | Alexandria, Virginia 22314-2944 | 703.518.8500

ARCHITECT/ENGINEERS:

ARCHITECTURE ENGINEERING INTERIOR DESIGN DESIGN/BUILD
ASTORINO
227 Fort Pitt Boulevard Pittsburgh Pennsylvania 15222
TEL 412 765 1700 FAX 412 765 1711 www.astorino.com

Drawing Title: **Enlarged Basement Floor Plan HVAC Ductwork**

Approved: Project Director

Project Title: **VA CARES CONSOLIDATION VAMC, PITTSBURGH, PA RESEARCH OFFICE BLDG.**

Location: **VAPHS UNIVERSITY DRIVE**

Date: **08-18-10** | Checked: **JS** | Drawn: **RAN**

Project Number: **646CA2500R**

Building Number: **30**

Drawing Number: **MH2-102**
Dwg: -- of --

Office of Facilities Management
Department of Veterans Affairs

VA FORM 08-6231, OCT 1978

P:\Project\20054250.00\CAD\UNIVERSITY DRIVE\Research Office Building\HVAC\MH2-102.dwg MBESHENCH 11/06/09 - 14:19:39

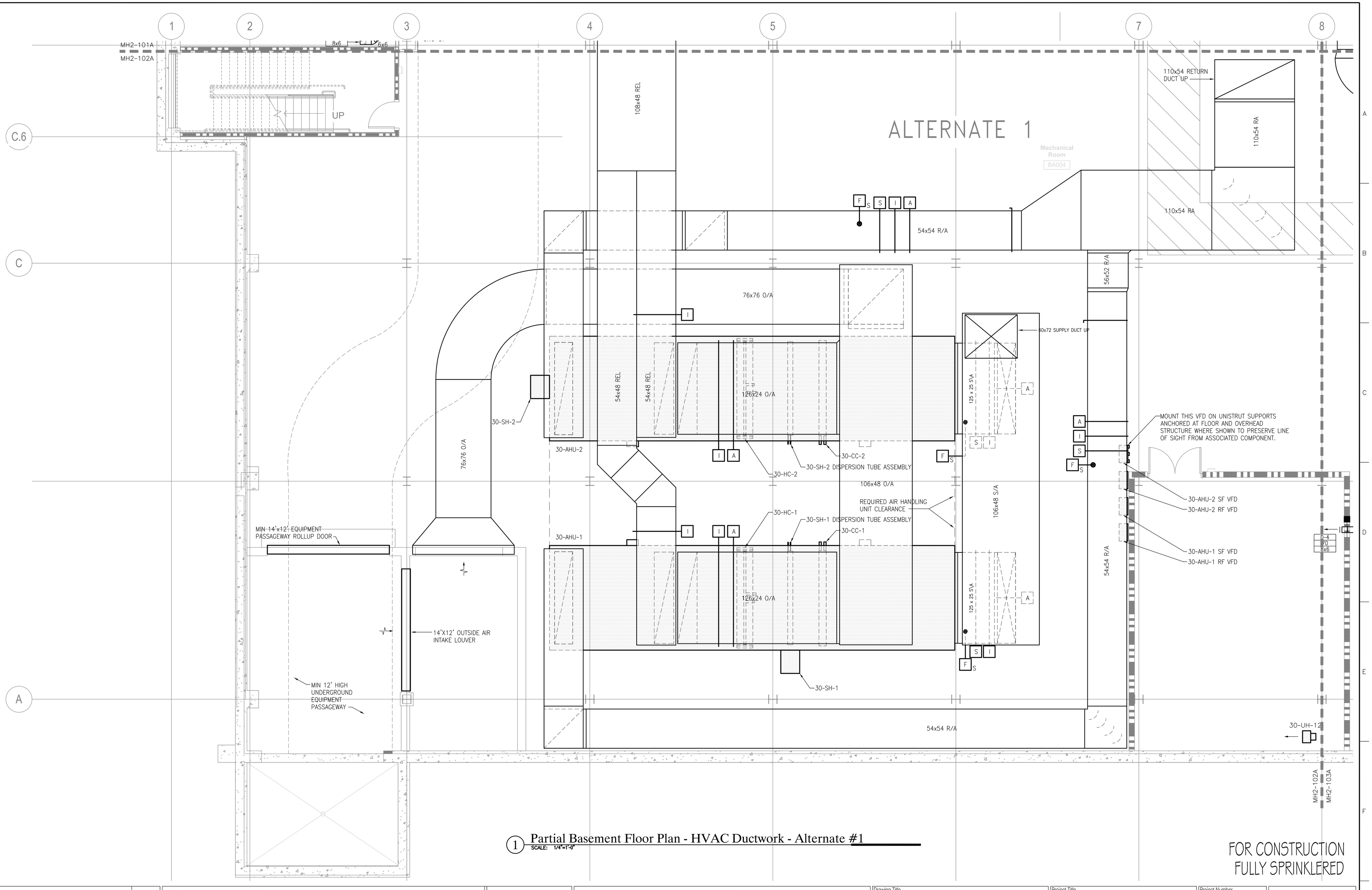

1 Partial Basement Floor Plan - HVAC Ductwork - Alternate #1

SCALE: 1/4"=1'-0"

FOR CONSTRUCTION
FULLY SPRINKLERED

Revisions:	Date

CONSULTANTS:

HDR Architecture, Inc.

1101 King Street | Suite 400 | Alexandria, Virginia 22314-2944 | 703.518.8500

ARCHITECT/ENGINEERS:

ARCHITECTURE ENGINEERING INTERIOR DESIGN DESIGN/BUILD ASTORINO

227 Fort Pitt Boulevard Pittsburgh Pennsylvania 15222
TEL 412.765.1700 FAX 412.765.1711 www.astorino.com

Drawing Title: **Enlarged Basement Floor Plan HVAC Ductwork - Alternate #1**

Approved: Project Director

Project Title: **VA CARES CONSOLIDATION VAMC, PITTSBURGH, PA RESEARCH OFFICE BLDG.**

Location: **VAPHS UNIVERSITY DRIVE**

Date: **08-18-10** | Checked: **JS** | Drawn: **RAN**

Project Number: **646CA2500R**

Building Number: **30**

Drawing Number: **MH2-102A**

Dwg. -- of --

Office of Facilities Management

Department of Veterans Affairs

VA FORM 08-6231, OCT 1978

P:\Project\20054525.00\CAD\UNIVERSITY DRIVE\Research Office Building\HVAC\MH2-102A.dwg MBESHENICH 11/06/09 - 14:00:42

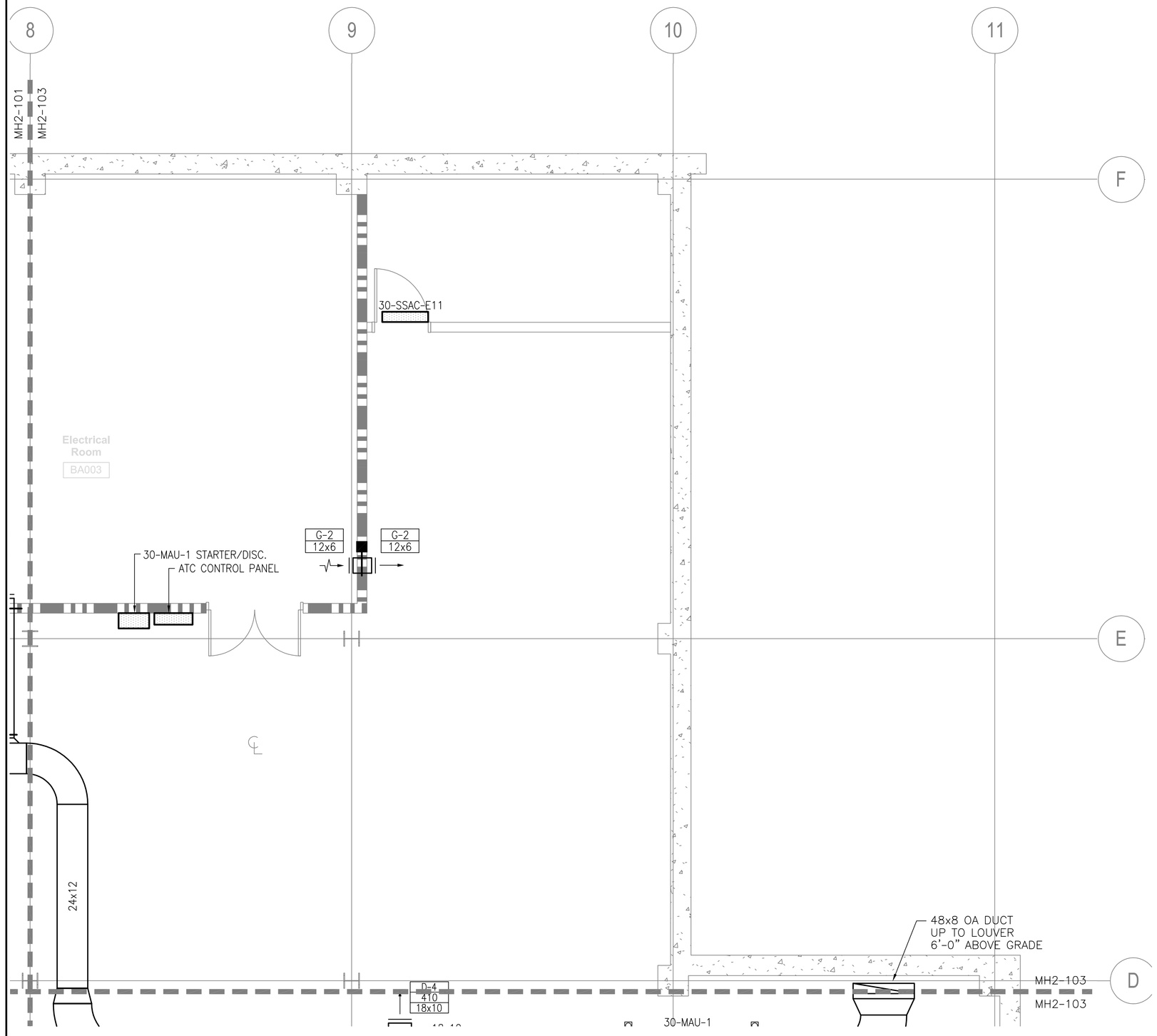

1 Enlarged Basement Floor Plan - HVAC Ductwork

SCALE: 1/4"=1'-0"

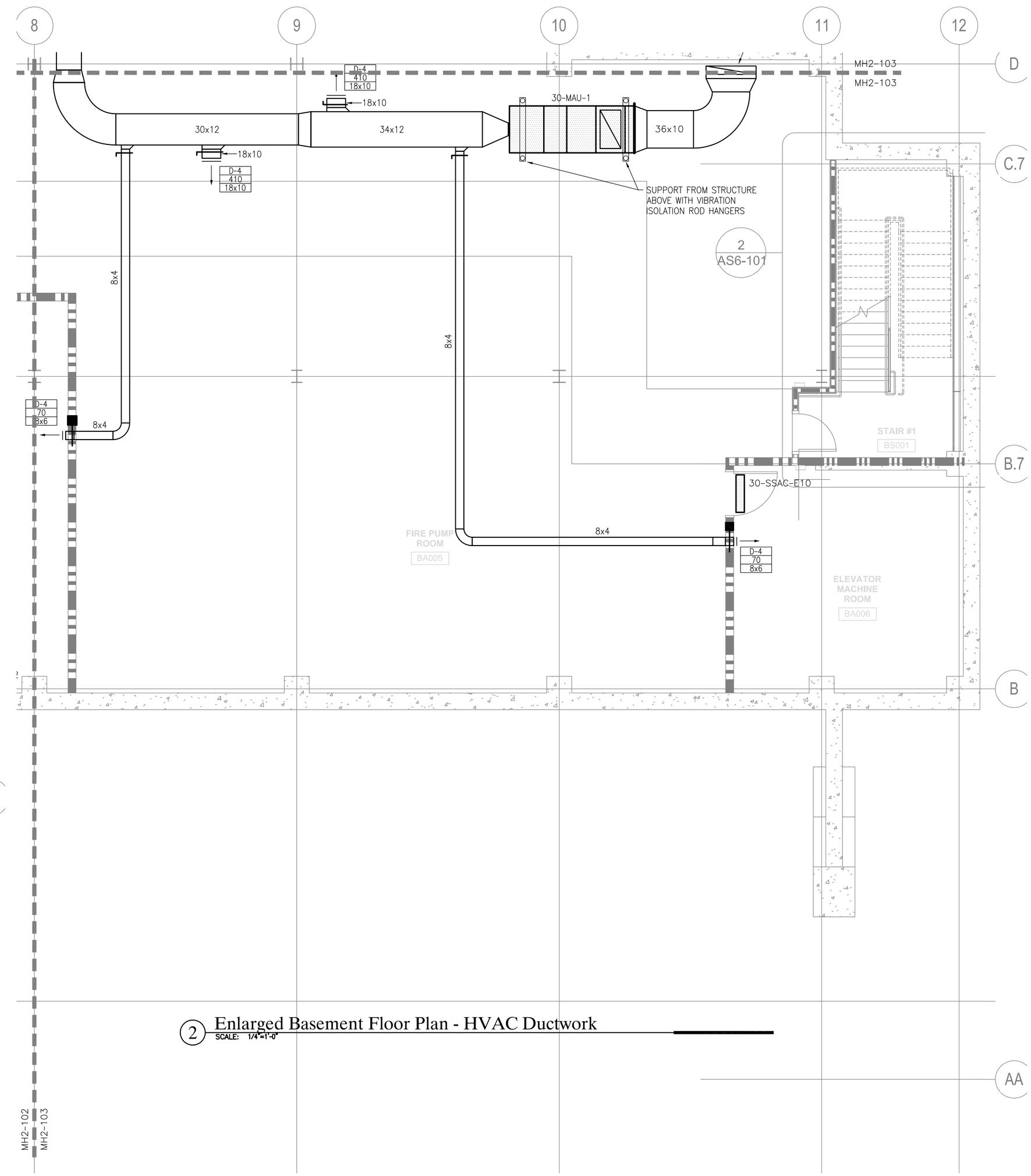

2 Enlarged Basement Floor Plan - HVAC Ductwork

SCALE: 1/4"=1'-0"

FOR CONSTRUCTION
FULLY SPRINKLERED

Revisions:	Date

CONSULTANTS:

HDR

HDR Architecture, Inc.

1101 King Street | Suite 400 | Alexandria, Virginia 22314-2944 | 703.518.8500

ARCHITECT/ENGINEERS:

ARCHITECTURE ENGINEERING INTERIOR DESIGN DESIGN/BUILD

ASTORINO

227 Fort Pitt Boulevard Pittsburgh Pennsylvania 15222
TEL 412 765 1700 FAX 412 765 1711 www.astorino.com

Drawing Title: **Enlarged Basement Floor Plans HVAC Ductwork**

Approved: Project Director

Project Title: **VA CARES CONSOLIDATION VAMC, PITTSBURGH, PA RESEARCH OFFICE BLDG.**

Location: **VAPHS UNIVERSITY DRIVE**

Date: **00-00-00** | Checked: **JS** | Drawn: **RAN**

Project Number: **646CA2500R**

Building Number: **30**

Drawing Number: **MH2-103**

Dwg: -- of --

Office of Facilities Management

Department of Veterans Affairs

VA FORM 08-6231, OCT 1978

P:\Project\20054525.00\CAD\UNIVERSITY DRIVE\Research Office Building\HVAC\MH2-103.dwg M8ESHENGH 11/06/09 - 14:01:14

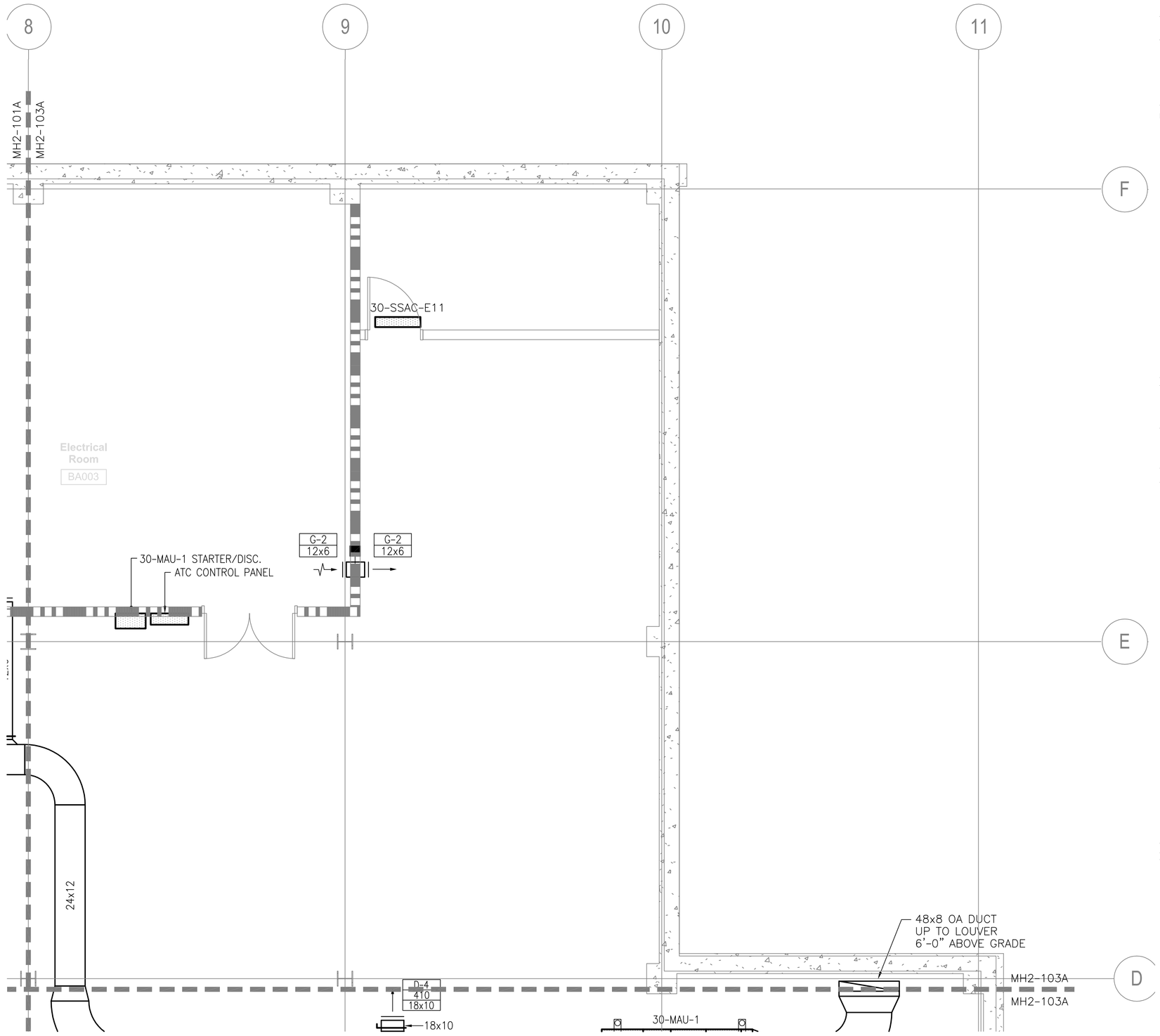

1 Enlarged Basement Floor Plan - HVAC Ductwork - Alternate #1

SCALE: 1/4"=1'-0"

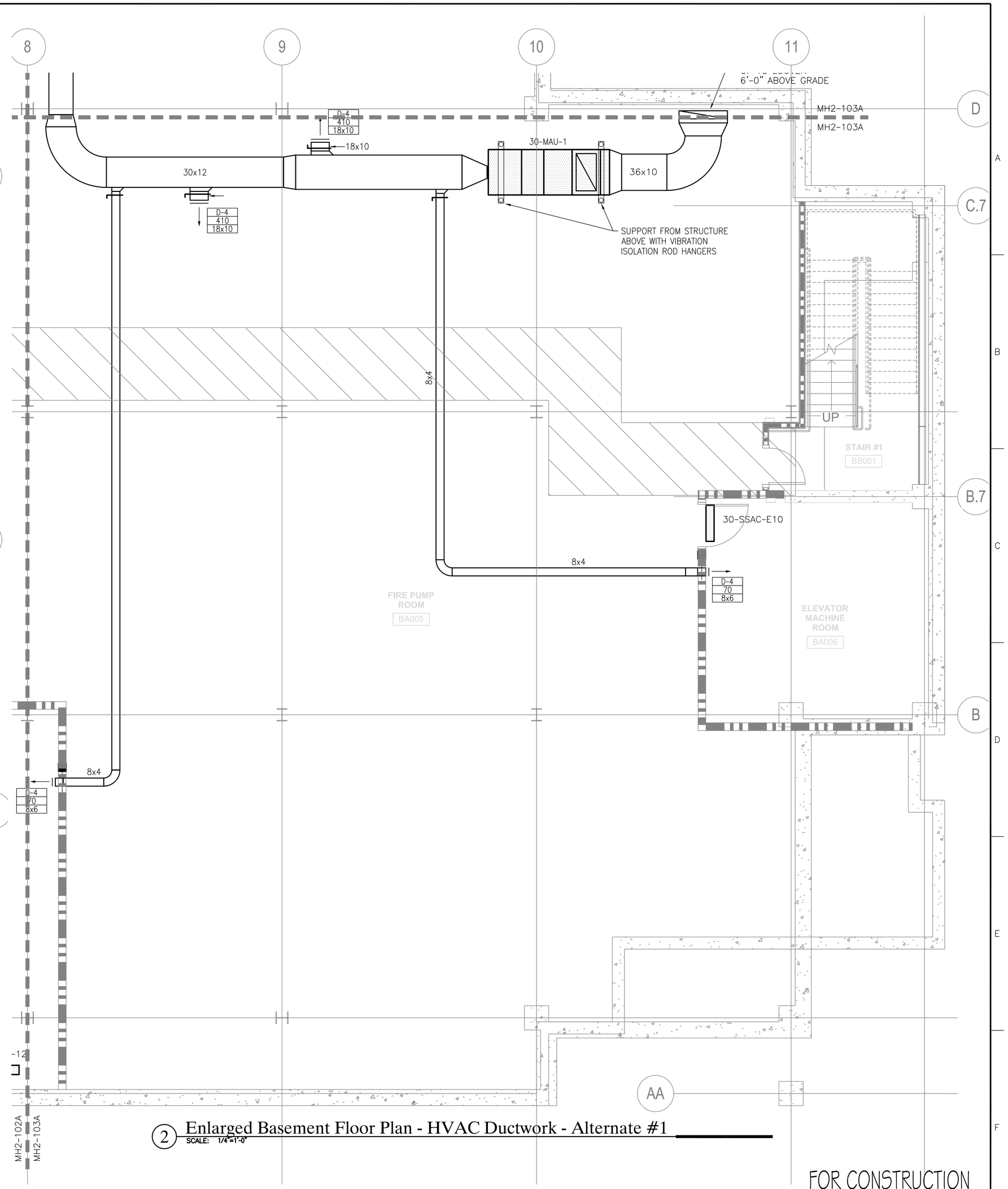

2 Enlarged Basement Floor Plan - HVAC Ductwork - Alternate #1

SCALE: 1/4"=1'-0"

FOR CONSTRUCTION
FULLY SPRINKLERED

Revisions:	Date

CONSULTANTS:

HDR

HDR Architecture, Inc.

1101 King Street | Suite 400 | Alexandria, Virginia 22314-2944 | 703.518.8500

ARCHITECT/ENGINEERS:

ARCHITECTURE
ENGINEERING
INTERIOR DESIGN
DESIGN/BUILD

ASTORINO

227 Fort Pitt Boulevard Pittsburgh Pennsylvania 15222
TEL 412 765 3700 FAX 412 765 3711 www.astorino.com

Drawing Title
Enlarged Basement Floor Plans HVAC Ductwork - Alternate #1

Approved: Project Director

Project Title
VA CARES CONSOLIDATION VAMC, PITTSBURGH, PA RESEARCH OFFICE BLDG.

Location
VAPHS UNIVERSITY DRIVE

Date **08-18-10** | Checked **JS** | Drawn **RAN**

Project Number **646CA2500R**

Building Number **30**

Drawing Number **MH2-103A**

Dwg. -- of --

Office of Facilities Management

Department of Veterans Affairs

VA FORM 08-6231, OCT 1978

P:\Project\2005425.00\CAD\UNIVERSITY DRIVE\Research Office Building\HVAC\MH2-103A.dwg M8ESHENGH 11/06/09 - 14:01:38

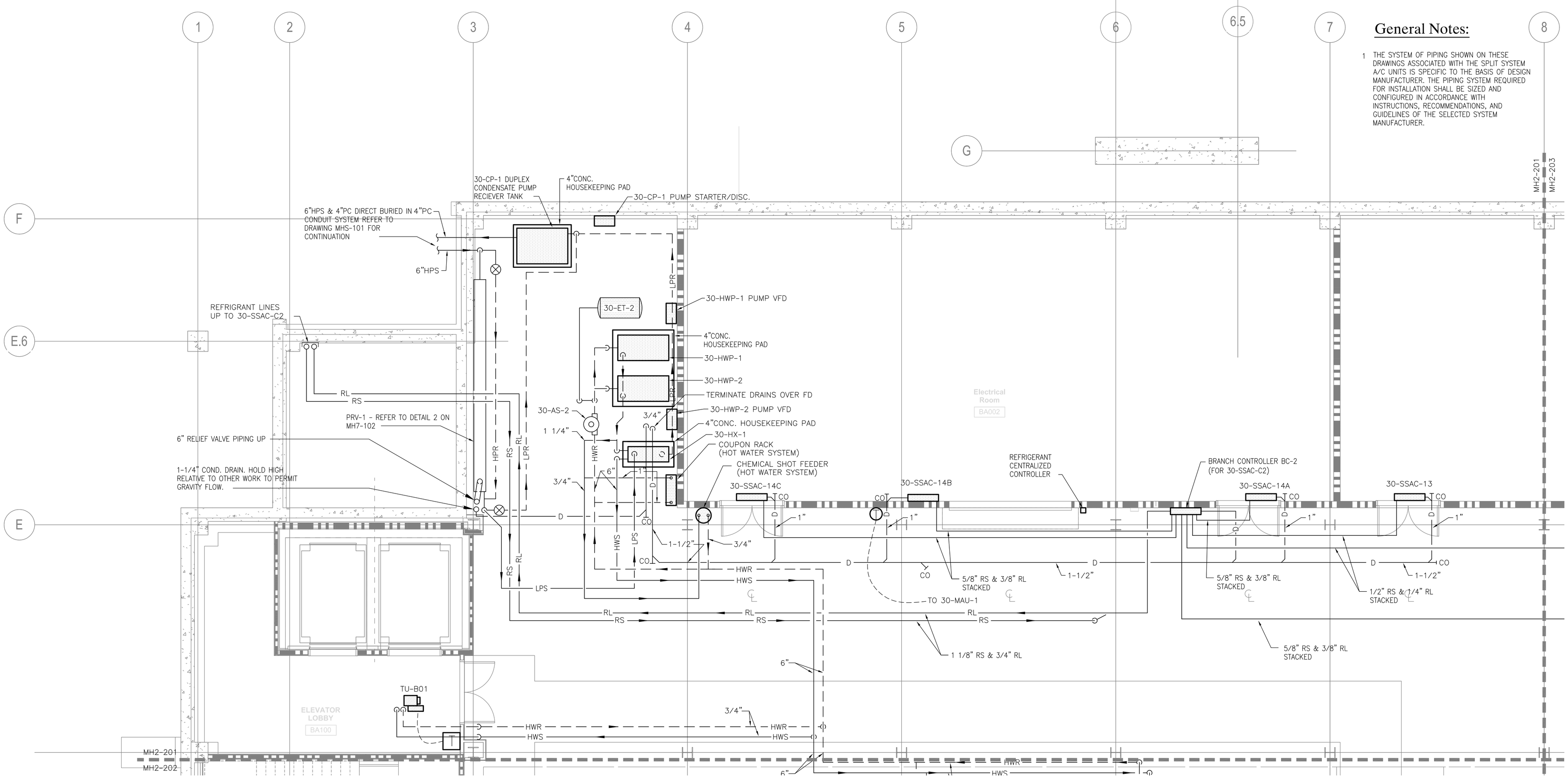

General Notes:

1 THE SYSTEM OF PIPING SHOWN ON THESE DRAWINGS ASSOCIATED WITH THE SPLIT SYSTEM A/C UNITS IS SPECIFIC TO THE BASIS OF DESIGN MANUFACTURER. THE PIPING SYSTEM REQUIRED FOR INSTALLATION SHALL BE SIZED AND CONFIGURED IN ACCORDANCE WITH INSTRUCTIONS, RECOMMENDATIONS, AND GUIDELINES OF THE SELECTED SYSTEM MANUFACTURER.

1 Enlarged Basement Floor Plan - HVAC Piping
SCALE: 1/4"=1'-0"

FOR CONSTRUCTION
FULLY SPRINKLERED

CONSULTANTS:

HDR Architecture, Inc.
1101 King Street | Suite 400 | Alexandria, Virginia 22314-2944 | 703.518.8500

Revisions: | **Date**

ARCHITECT/ENGINEERS:

ARCHITECTURE ENGINEERING INTERIOR DESIGN DESIGN/BUILD
ASTORINO
227 Fort Pitt Boulevard Pittsburgh Pennsylvania 15222
TEL 412 765 3700 FAX 412 765 1731 www.astorino.com

Drawing Title	Enlarged Basement Floor Plan HVAC Piping
Approved: Project Director	
Project Title	VA CARES CONSOLIDATION VAMC, PITTSBURGH, PA RESEARCH OFFICE BLDG.
Project Number	646CA2500R
Building Number	30
Location	VAPHS UNIVERSITY DRIVE
Date	08-18-10
Checked	JS
Drawn	RAN
Drawing Number	MH2-201
Dwg. -- of --	

Office of Facilities Management
Department of Veterans Affairs

VA FORM 08-6231, OCT 1978

P:\Project\20054250.00\CAD\UNIVERSITY DRIVE\Research Office Building\HVAC\MH2-201.dwg MBESHENCH 07/14/09 ; 14:15:16

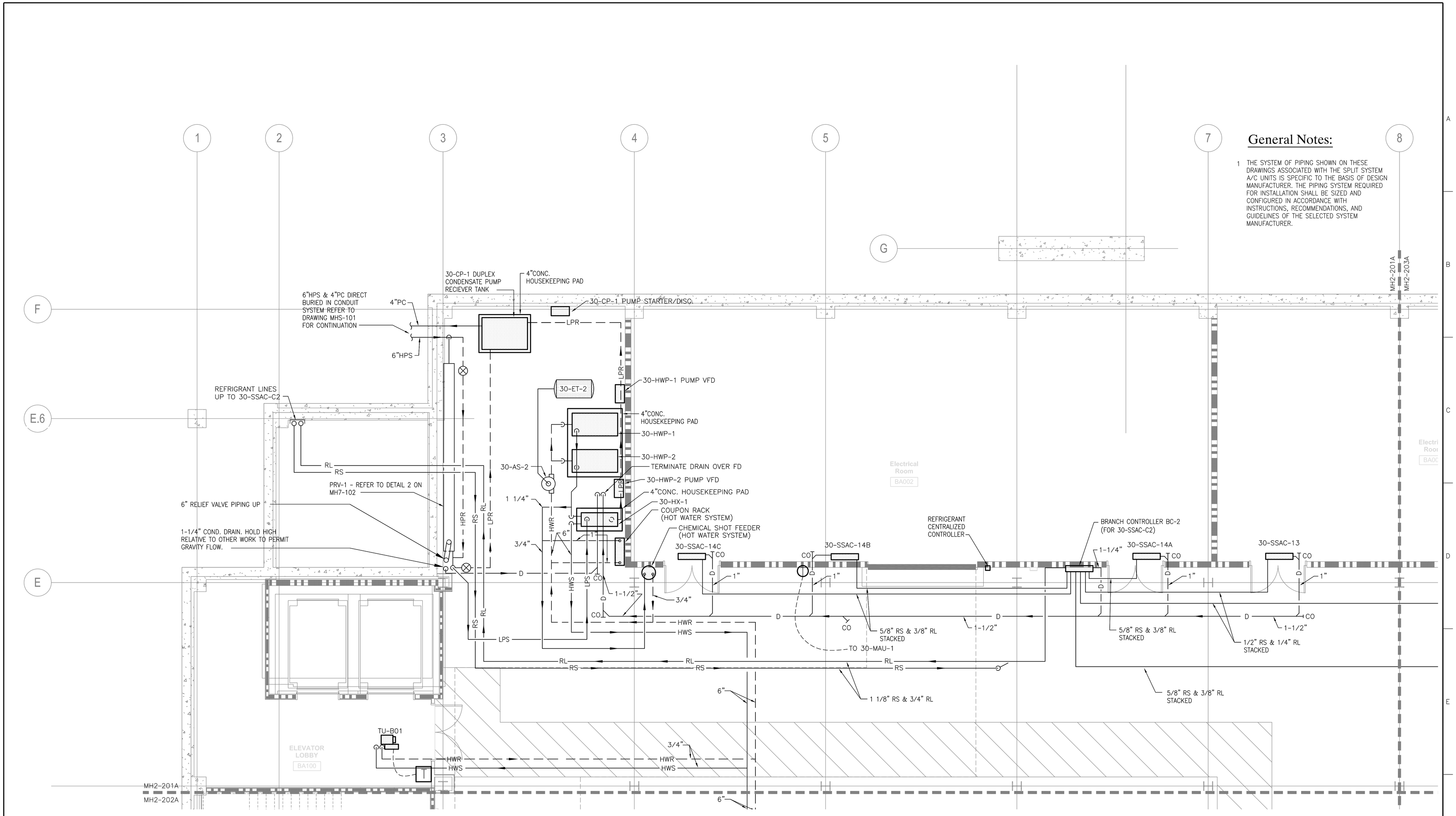

General Notes:

1 THE SYSTEM OF PIPING SHOWN ON THESE DRAWINGS ASSOCIATED WITH THE SPLIT SYSTEM A/C UNITS IS SPECIFIC TO THE BASIS OF DESIGN MANUFACTURER. THE PIPING SYSTEM REQUIRED FOR INSTALLATION SHALL BE SIZED AND CONFIGURED IN ACCORDANCE WITH INSTRUCTIONS, RECOMMENDATIONS, AND GUIDELINES OF THE SELECTED SYSTEM MANUFACTURER.

1 Enlarged Basement Floor Plan - HVAC Piping - Alternate #1

SCALE: 1/4"=1'-0"

FOR CONSTRUCTION
FULLY SPRINKLERED

Revisions:	Date

CONSULTANTS:

HDR Architecture, Inc.
1101 King Street | Suite 400 | Alexandria, Virginia 22314-2944 | 703.518.8500

ARCHITECT/ENGINEERS:

ARCHITECTURE ENGINEERING INTERIOR DESIGN DESIGN/BUILD
ASTORINO
227 Fort Pitt Boulevard Pittsburgh Pennsylvania 15222
TEL 412.765.1700 FAX 412.765.1711 www.astorino.com

Drawing Title: **Enlarged Basement Floor Plan HVAC Piping - Alternate #1**

Approved: Project Director

Project Title: **VA CARES CONSOLIDATION VAMC, PITTSBURGH, PA RESEARCH OFFICE BLDG.**

Location: **VAPHS UNIVERSITY DRIVE**

Date: **08-18-10** | Checked: **JS** | Drawn: **RAN**

Project Number: **646CA2500R**

Building Number: **30**

Drawing Number: **MH2-201A**

Dwg. -- of --

Office of Facilities Management

Department of Veterans Affairs

VA FORM 08-6231, OCT 1978

P:\Project\20050425.00\CAD\UNIVERSITY DRIVE\Research Office Building\HVAC\MH2-2014.dwg WSURLOW 10/21/09 ; 11:17:06

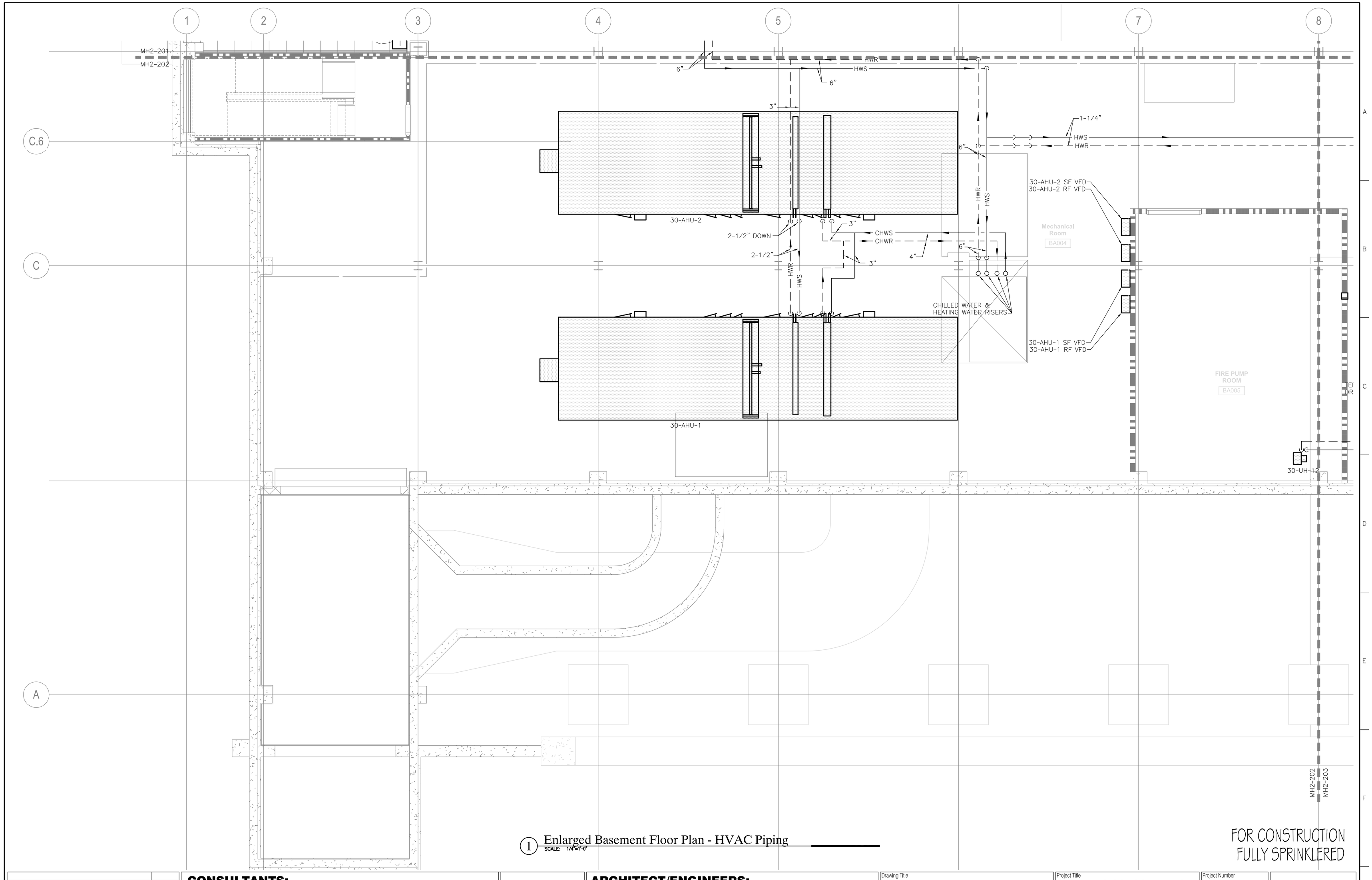

1 Enlarged Basement Floor Plan - HVAC Piping
SCALE: 1/4"=1'-0"

FOR CONSTRUCTION
FULLY SPRINKLERED

Revisions:	Date

CONSULTANTS:

HDR

HDR Architecture, Inc.

1101 King Street | Suite 400 | Alexandria, Virginia 22314-2944 | 703.518.8500

ARCHITECT/ENGINEERS:

ARCHITECTURE
ENGINEERING
INTERIOR DESIGN
DESIGN/BUILD

ASTORINO

227 Fort Pitt Boulevard Pittsburgh Pennsylvania 15222
TEL 412 765 1700 FAX 412 765 1711 www.astorino.com

Drawing Title
Enlarged Basement Floor Plan HVAC Piping

Approved: Project Director

Project Title
VA CARES CONSOLIDATION VAMC, PITTSBURGH, PA RESEARCH OFFICE BLDG.

Location
VAPHS UNIVERSITY DRIVE

Date **08-18-10** | Checked **JS** | Drawn **RAN**

Project Number **646CA2500R**

Building Number **30**

Drawing Number **MH2-202**

Dwg. -- of --

Office of Facilities Management

Department of Veterans Affairs

VA FORM 08-6231, OCT 1978

P:\Project\20054250\CAD\UNIVERSITY DRIVE\Research Office Building\HVAC\MH2-202.dwg WSJRLOW 10/21/09 ; 11:07:08

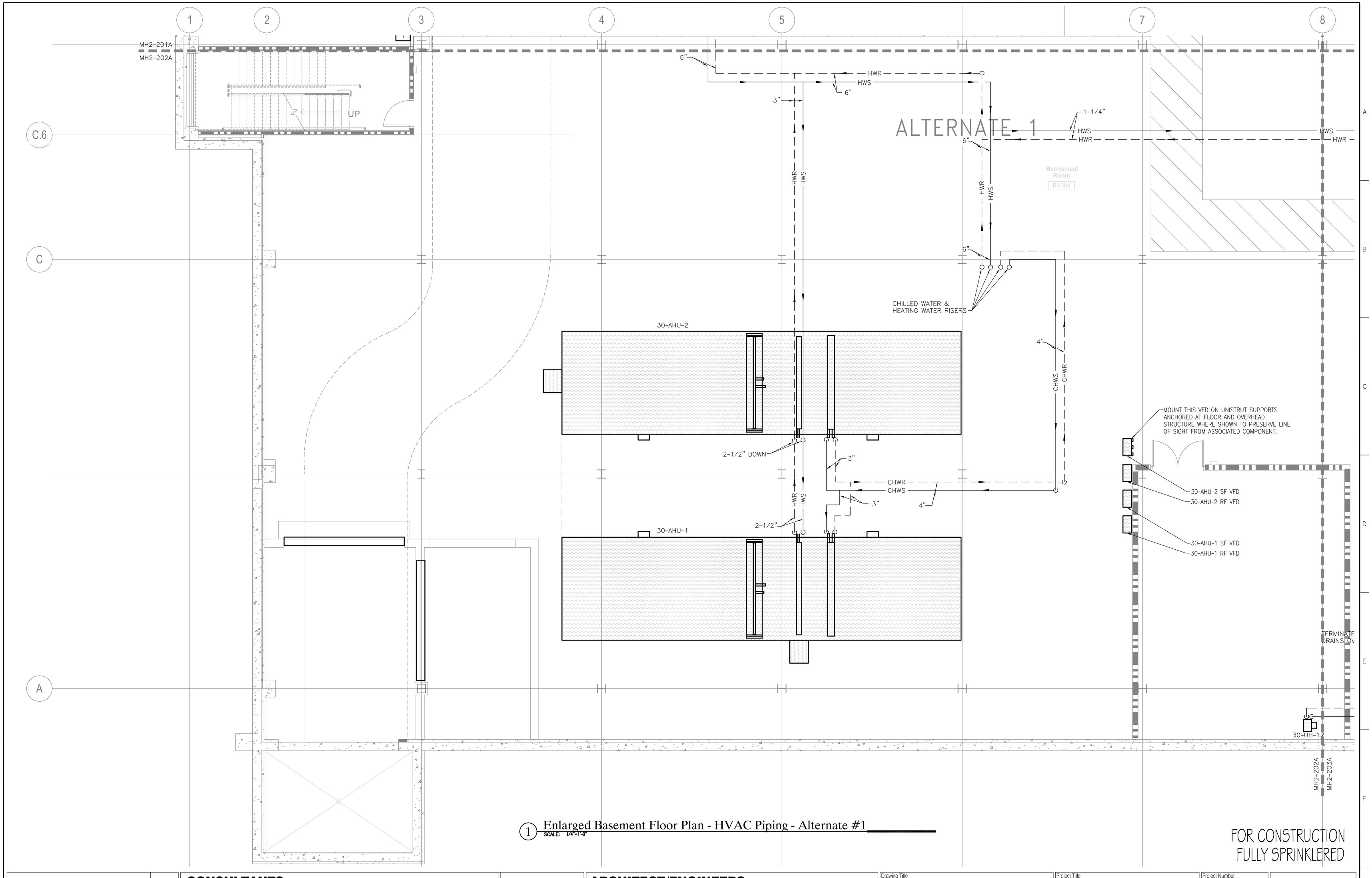

1 Enlarged Basement Floor Plan - HVAC Piping - Alternate #1

SCALE: 1/4"=1'-0"

FOR CONSTRUCTION
FULLY SPRINKLERED

Revisions:	Date

CONSULTANTS:

HDR

HDR Architecture, Inc.

1101 King Street | Suite 400 | Alexandria, Virginia 22314-2944 | 703.518.8500

ARCHITECT/ENGINEERS:

ARCHITECTURE ENGINEERING INTERIOR DESIGN DESIGN/BUILD

ASTORINO

227 Fort Pitt Boulevard Pittsburgh Pennsylvania 15222
TEL 412 765 1700 FAX 412 765 1711 www.astorino.com

Drawing Title: **Enlarged Basement Floor Plan HVAC Piping - Alternate #1**

Approved: Project Director

Project Title: **VA CARES CONSOLIDATION VAMC, PITTSBURGH, PA RESEARCH OFFICE BLDG.**

Location: **VAPHS UNIVERSITY DRIVE**

Date: **08-18-10** | Checked: **JS** | Drawn: **RAN**

Project Number: **646CA2500R**

Building Number: **30**

Drawing Number: **MH2-202A**

Dwg: -- of --

Office of Facilities Management

Department of Veterans Affairs

VA FORM 08-6231, OCT 1978

P:\Project\20054250\CAD\UNIVERSITY DRIVE\Research Office Building\HVAC\MH2-202A.dwg WSURLOW 10/21/09 ; 11:07:51

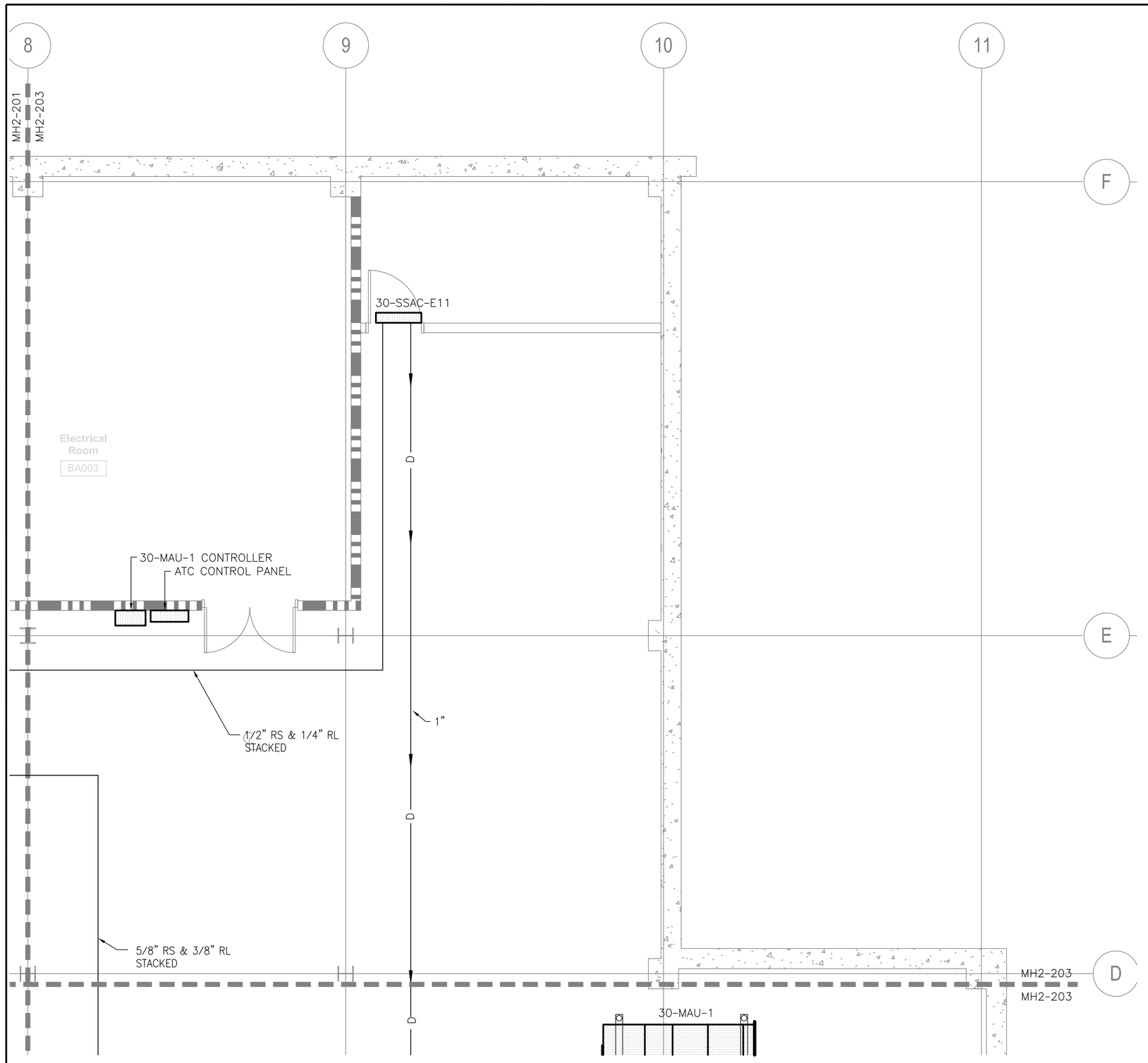

1 Enlarged Basement Floor Plan - HVAC Piping
SCALE: 1/4"=1'-0"

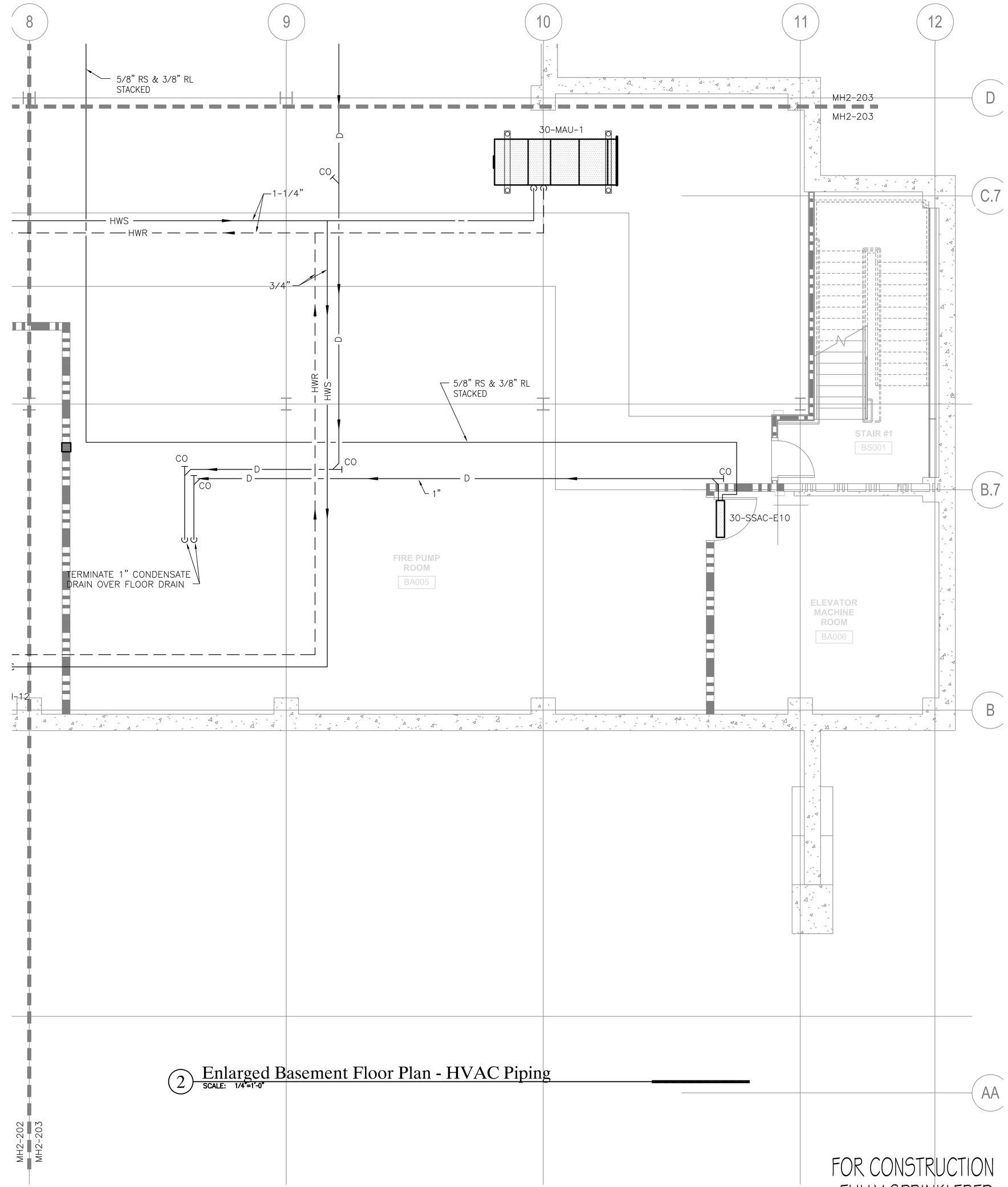

2 Enlarged Basement Floor Plan - HVAC Piping
SCALE: 1/4"=1'-0"

FOR CONSTRUCTION
FULLY SPRINKLERED

General Notes:

1 THE SYSTEM OF PIPING SHOWN ON THESE DRAWINGS ASSOCIATED WITH THE SPLIT SYSTEM A/C UNITS IS SPECIFIC TO THE BASIS OF DESIGN MANUFACTURER. THE PIPING SYSTEM REQUIRED FOR INSTALLATION SHALL BE SIZED AND CONFIGURED IN ACCORDANCE WITH INSTRUCTIONS, RECOMMENDATIONS, AND GUIDELINES OF THE SELECTED SYSTEM MANUFACTURER.

Revisions:	Date

CONSULTANTS:

HDR Architecture, Inc.
1101 King Street | Suite 400 | Alexandria, Virginia 22314-2944 | 703.518.8500

ARCHITECT/ENGINEERS:

ARCHITECTURE ENGINEERING INTERIOR DESIGN DESIGN/BUILD
ASTORINO
227 Fort Pitt Boulevard Pittsburgh Pennsylvania 15222
TEL 412 765 3700 FAX 412 765 3731 www.astorino.com

Drawing Title: **Enlarged Basement Floor Plans HVAC Piping**

Approved: Project Director

Project Title: **VA CARES CONSOLIDATION VAMC, PITTSBURGH, PA RESEARCH OFFICE BLDG.**

Location: **VAPHS UNIVERSITY DRIVE**

Date: **08-18-10** | Checked: **JS** | Drawn: **RAN**

Project Number: **646CA2500R**

Building Number: **30**

Drawing Number: **MH2-203**
Dwg. -- of --

Office of Facilities Management
Department of Veterans Affairs

VA FORM 08-6231, OCT 1978

P:\Project\200542500\CAD\UNIVERSITY DRIVE\Research Office Building\HVAC\MH2-203.dwg WSUBLOW 10/21/09 ; 11:09:1

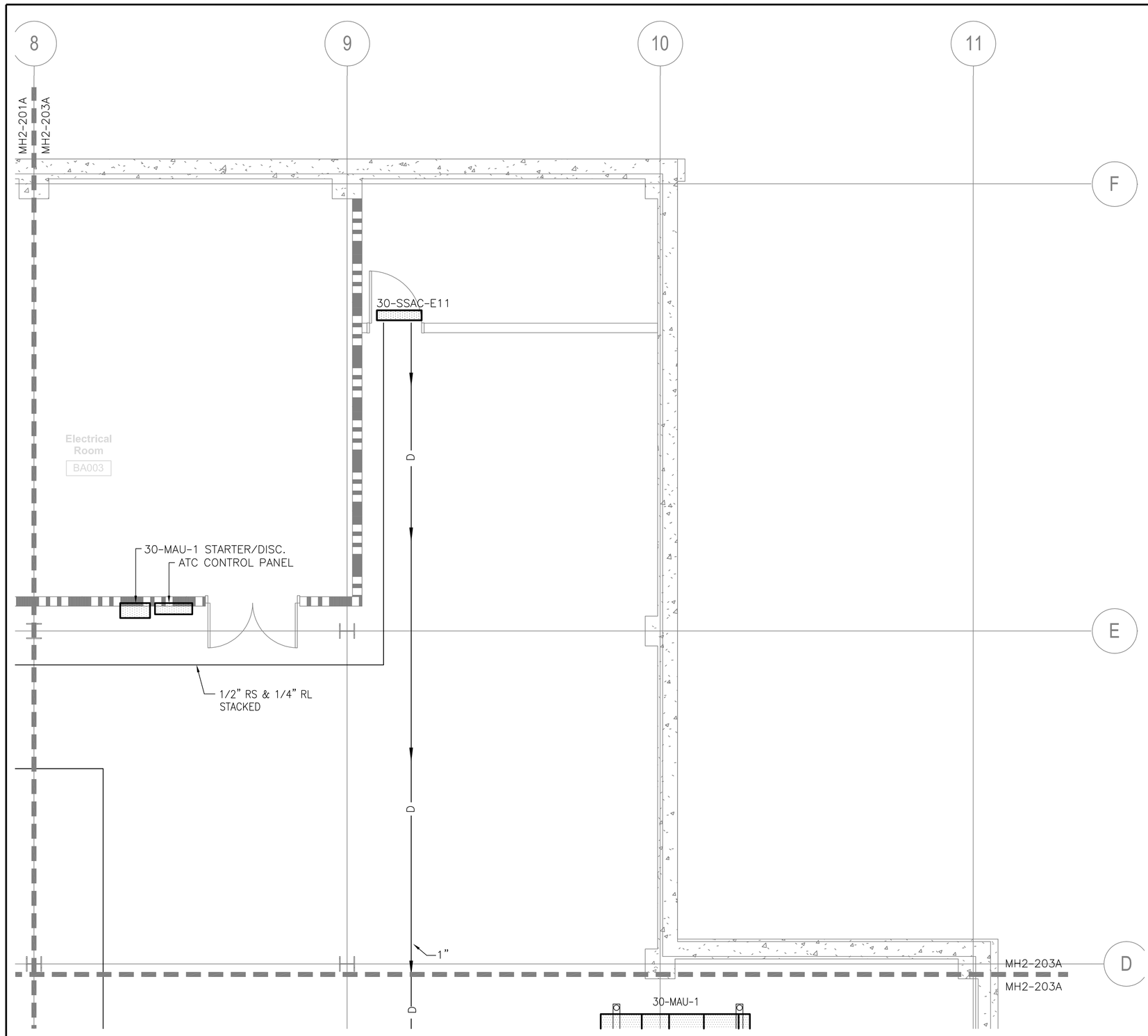

1 Enlarged Basement Floor Plan - HVAC Piping - Alternate #1

SCALE: 1/4"=1'-0"

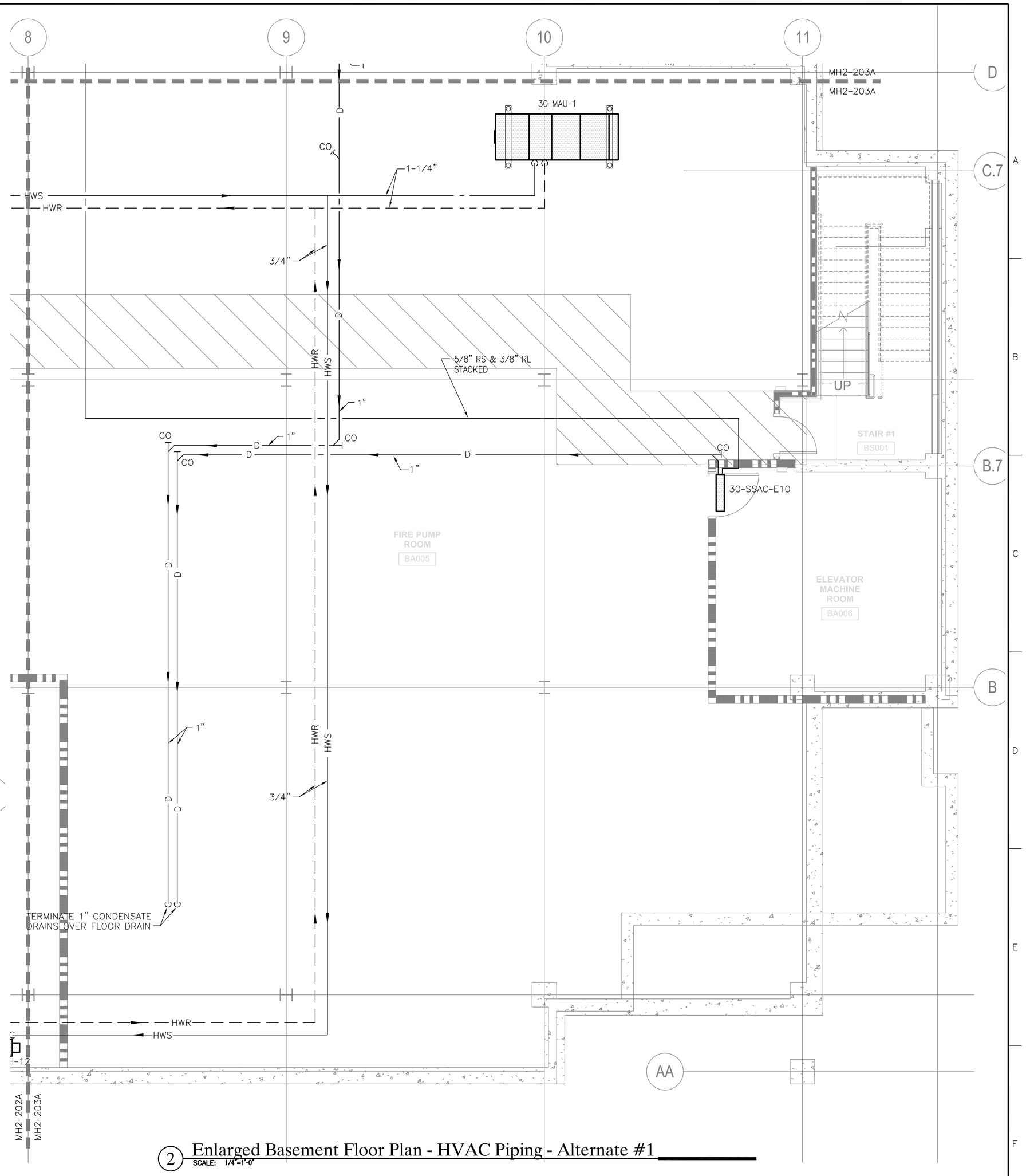

2 Enlarged Basement Floor Plan - HVAC Piping - Alternate #1

SCALE: 1/4"=1'-0"

General Notes:

1 THE SYSTEM OF PIPING SHOWN ON THESE DRAWINGS ASSOCIATED WITH THE SPLIT SYSTEM A/C UNITS IS SPECIFIC TO THE BASIS OF DESIGN MANUFACTURER. THE PIPING SYSTEM REQUIRED FOR INSTALLATION SHALL BE SIZED AND CONFIGURED IN ACCORDANCE WITH INSTRUCTIONS, RECOMMENDATIONS, AND GUIDELINES OF THE SELECTED SYSTEM MANUFACTURER.

FOR CONSTRUCTION
FULLY SPRINKLERED

Revisions:	Date

CONSULTANTS:

HDR Architecture, Inc.
1101 King Street | Suite 400 | Alexandria, Virginia 22314-2944 | 703.518.8500

ARCHITECT/ENGINEERS:

ARCHITECTURE ENGINEERING INTERIOR DESIGN DESIGN/BUILD
ASTORINO
227 Fort Pitt Boulevard Pittsburgh Pennsylvania 15222
TEL 412 765 1700 FAX 412 765 1731 www.astorino.com

Drawing Title: **Enlarged Basement Floor Plans HVAC Piping - Alternate #1**

Approved: Project Director

Project Title: **VA CARES CONSOLIDATION VAMC, PITTSBURGH, PA RESEARCH OFFICE BLDG.**

Location: **VAPHS UNIVERSITY DRIVE**

Date: **08-18-10** | Checked: **JS** | Drawn: **RAN**

Project Number: **646CA2500R**

Building Number: **30**

Drawing Number: **MH2-203A**

Dwg: -- of --

Office of Facilities Management

Department of Veterans Affairs

VA FORM 08-6231, OCT 1978

P:\Project\300542500\CAD\UNIVERSITY DRIVE\Research Office Building\HVAC\MH2-203A.dwg WSJRLOW 10/21/09 ; 11:09:42

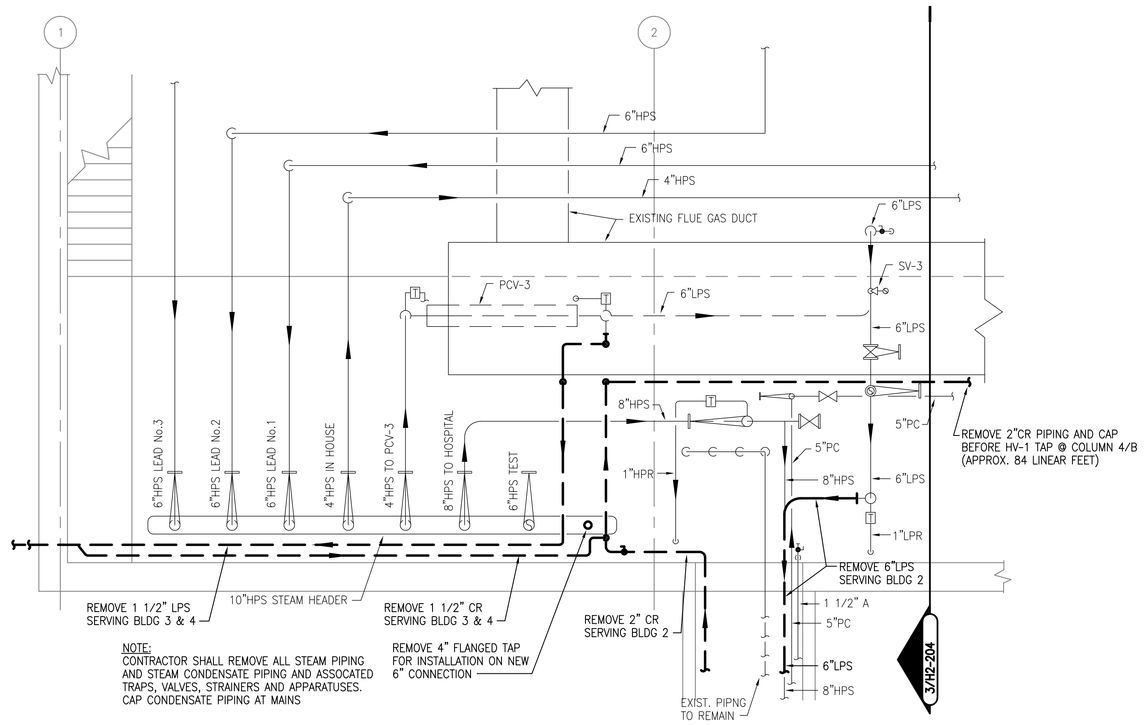

1 Partial Boiler Plant Platform Level - Demolition Plan — Building 5
SCALE: 1/4"=1'-0"

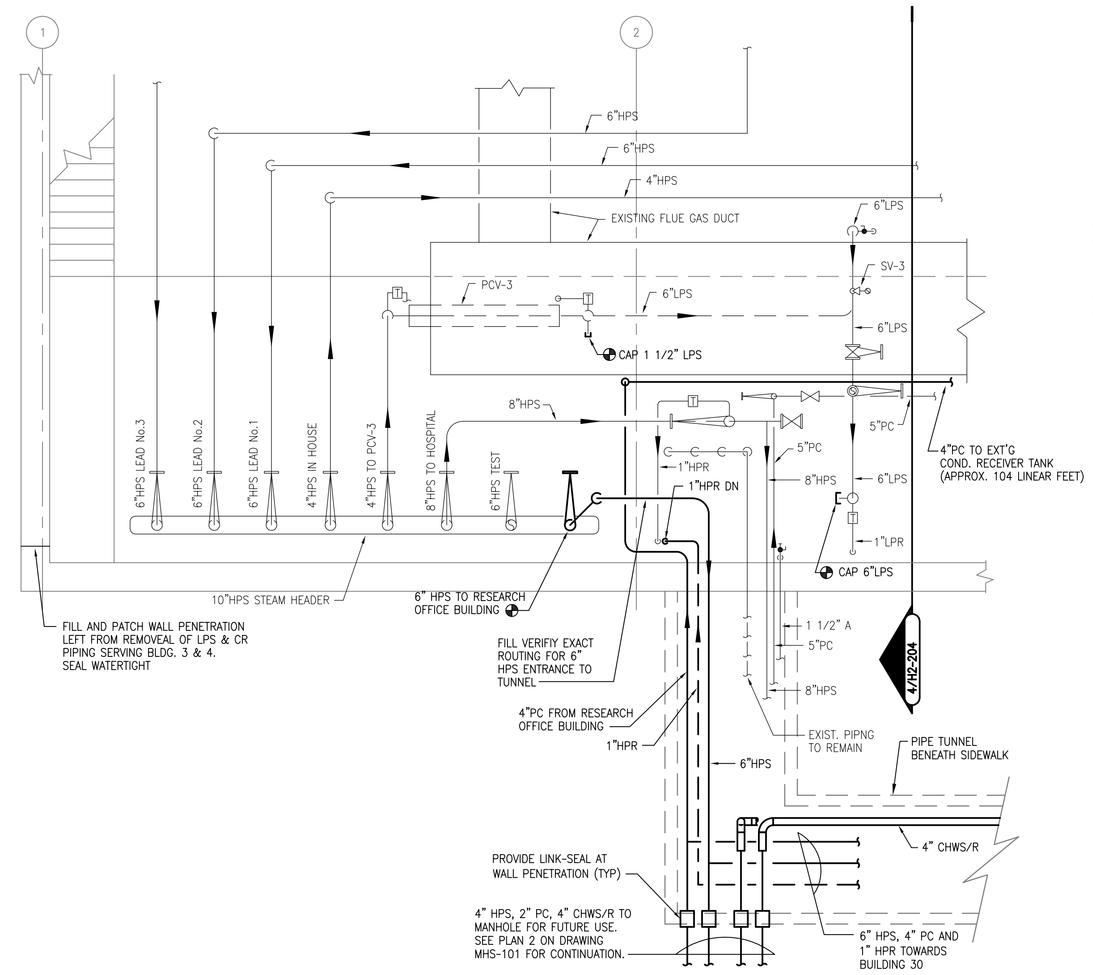

2 Partial Boiler Plant Platform Level - New Work Plan — Building 5
SCALE: 1/4"=1'-0"

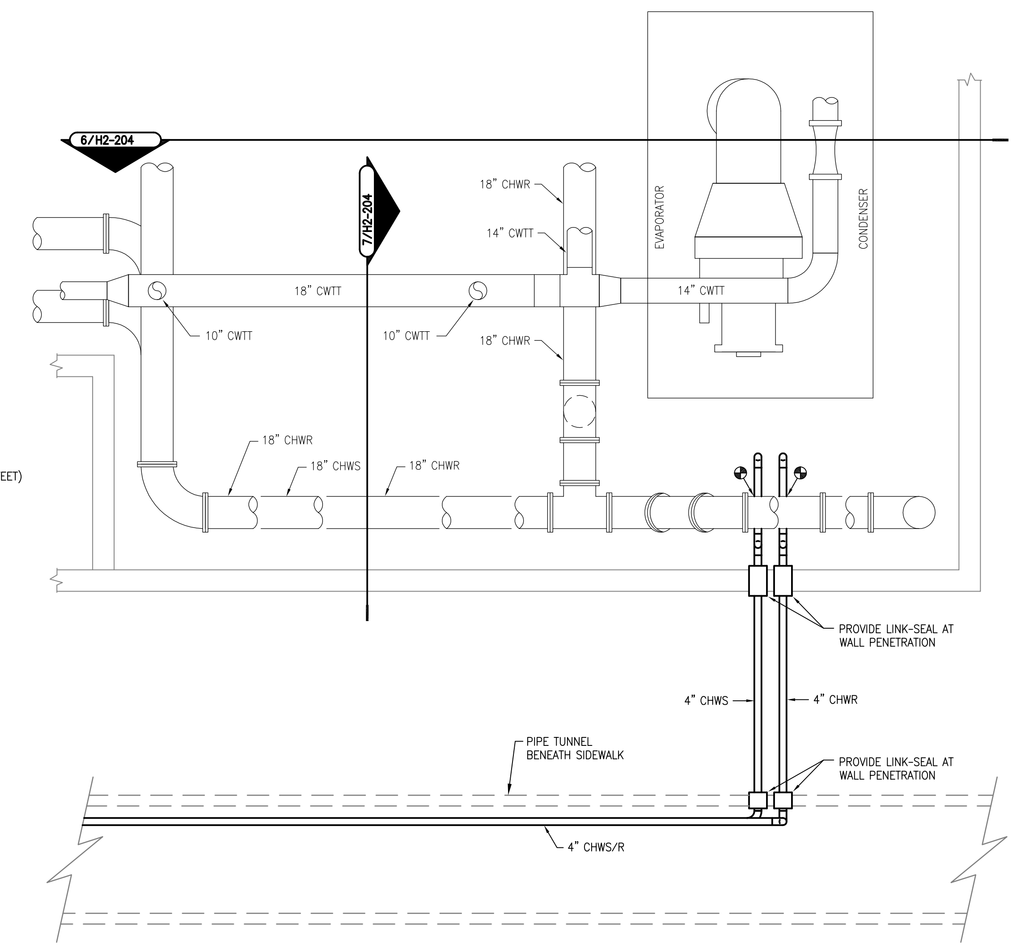

5 Partial Chiller Plant - New Work Plan — Building 8
SCALE: 1/4"=1'-0"

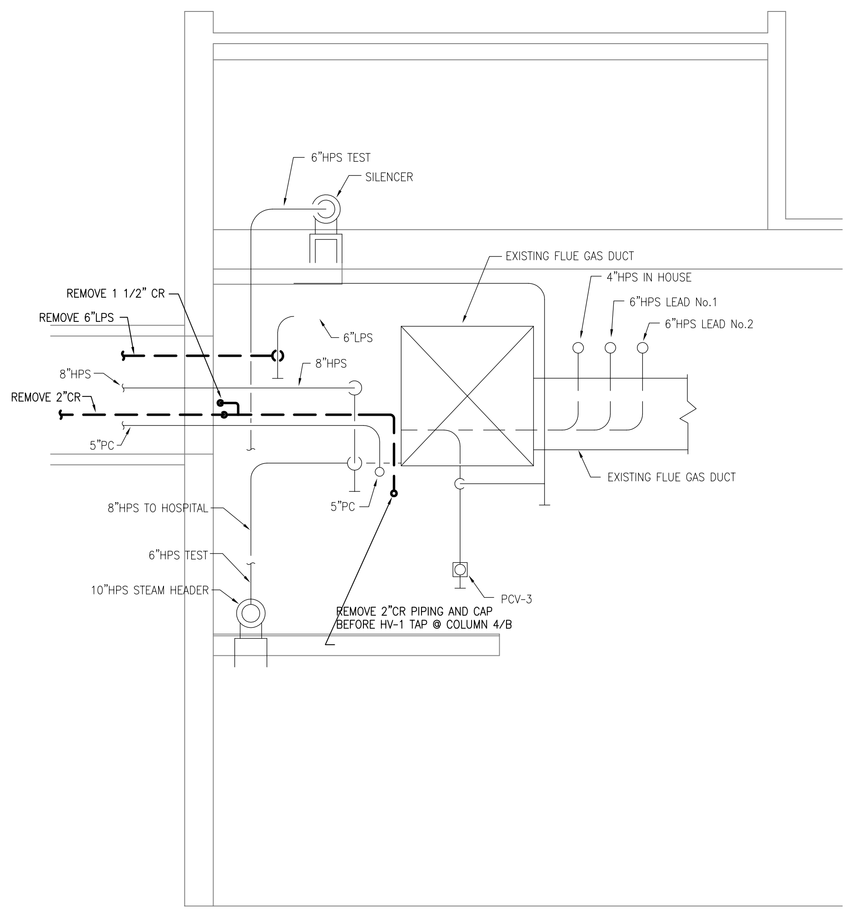

3 Section - Demolition — Building 5
SCALE: 1/4"=1'-0"

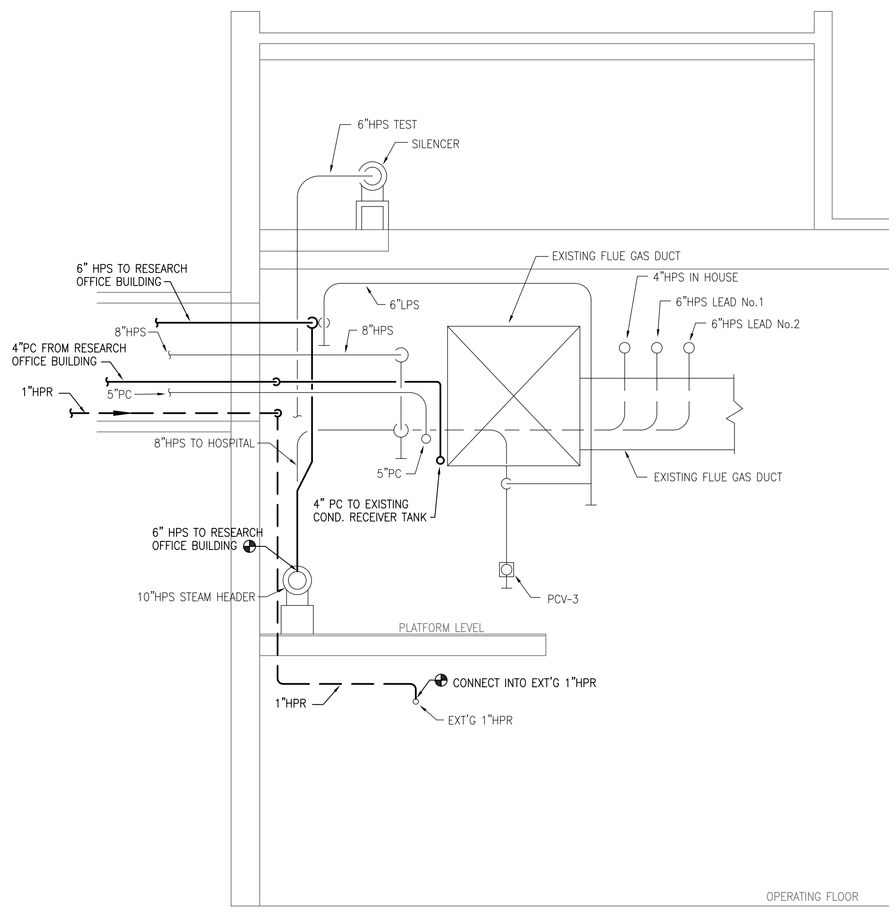

4 Section - New Work — Building 5
SCALE: 1/4"=1'-0"

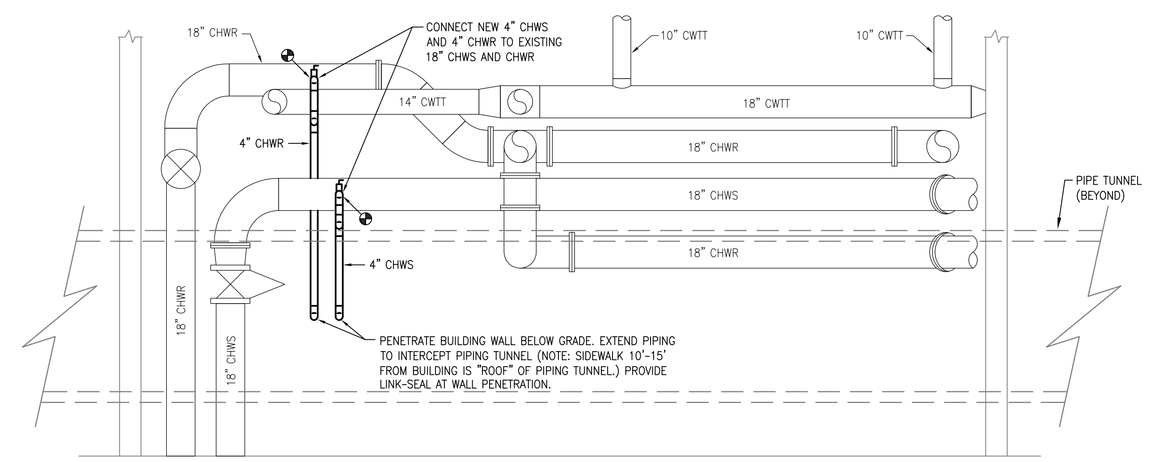

6 Section - New Work — Building 8
SCALE: 1/4"=1'-0"

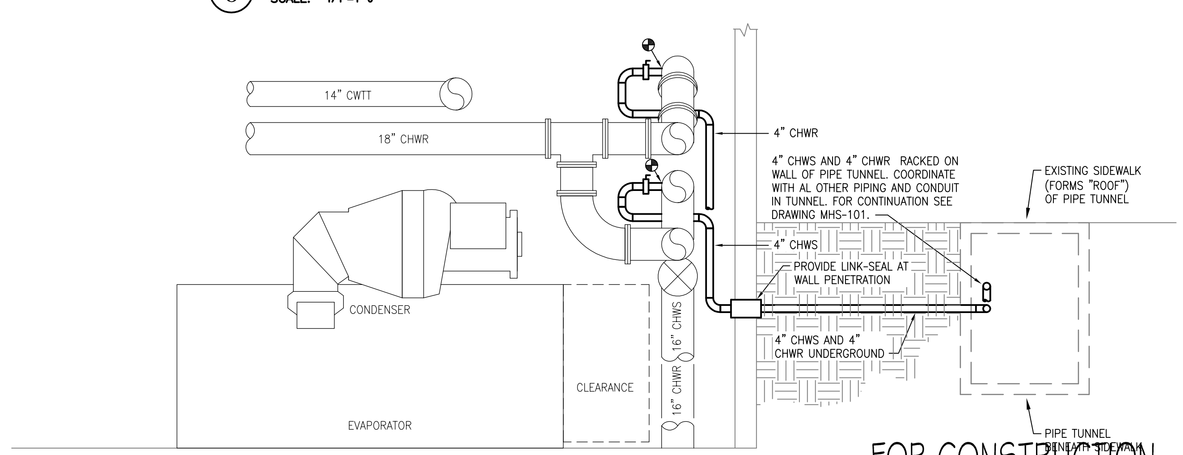

7 Section - New Work — Building 8
SCALE: 1/4"=1'-0"

FOR CONSTRUCTION
FULLY SPRINKLERED

Revisions:	Date

CONSULTANTS:

HDR Architecture, Inc.
1101 King Street | Suite 400 | Alexandria, Virginia 22314-2944 | 703.518.8500

ARCHITECT/ENGINEERS:

ARCHITECTURE ENGINEERING INTERIOR DESIGN DESIGN/BUILD
ASTORINO
227 Fort Pitt Boulevard Pittsburgh Pennsylvania 15222
TEL 412 765 1700 FAX 412 765 1711 www.astorino.com

Drawing Title: **Partial Enlarged Piping Plans - Boiler and Chiller Plants**

Approved: Project Director

Project Title: **VA CARES CONSOLIDATION VAMC, PITTSBURGH, PA RESEARCH OFFICE BLDG.**

Location: **VAPHS UNIVERSITY DRIVE**

Date: **08-18-10** | Checked: **JS** | Drawn: **RAN**

Project Number: **646CA2500R**

Building Number: **30**

Drawing Number: **MH2-204**
Dwg: -- of --

Office of Facilities Management
Department of Veterans Affairs

VA FORM 08-6231, OCT 1978

P:\Project\2005425.00\CAD\UNIVERSITY DRIVE\Research Office Building\HVAC\MH2-204.dwg JS480 08/05/10 - 10:27:15

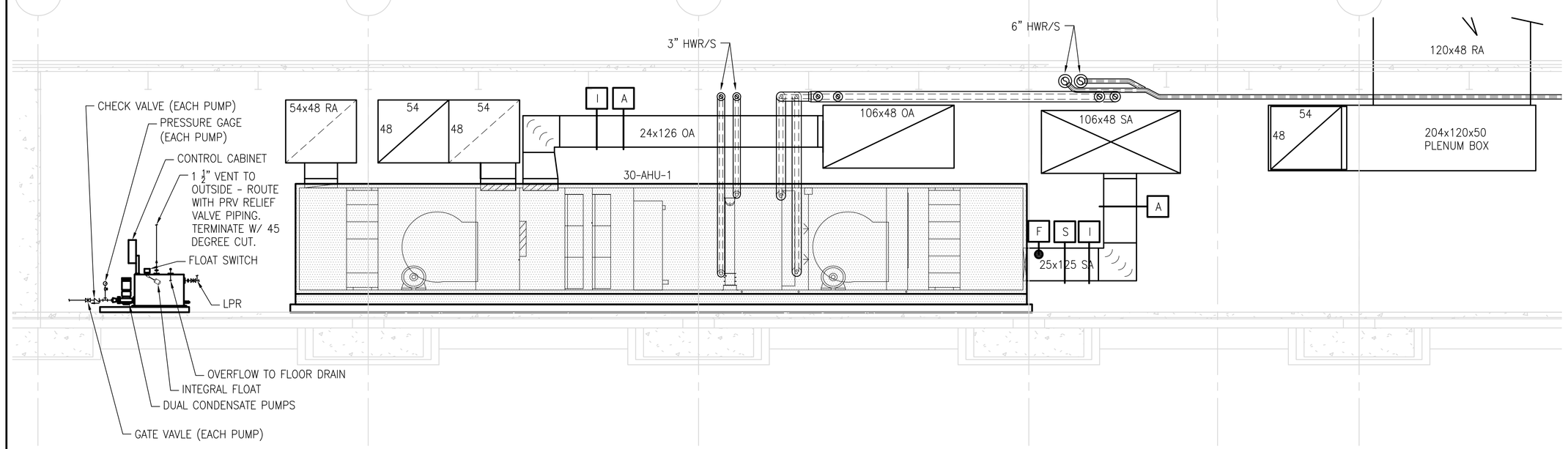

1 HVAC Section
SCALE: 1/4"=1'-0"

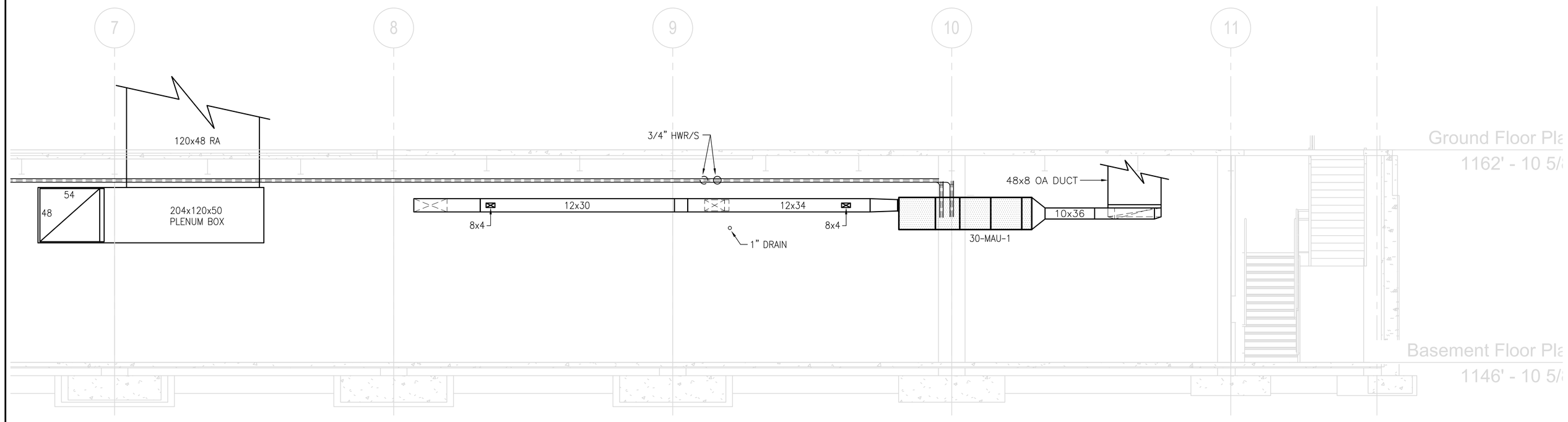

2 HVAC Section
SCALE: 1/4"=1'-0"

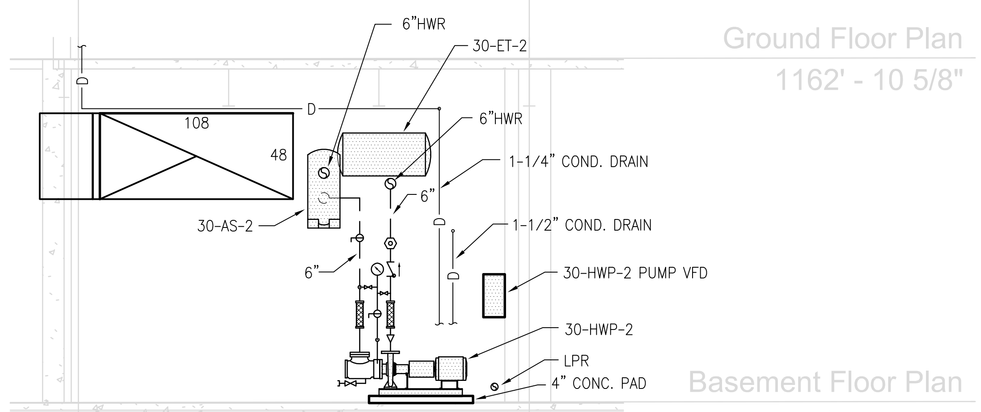

3 HVAC Section
SCALE: 1/4"=1'-0"

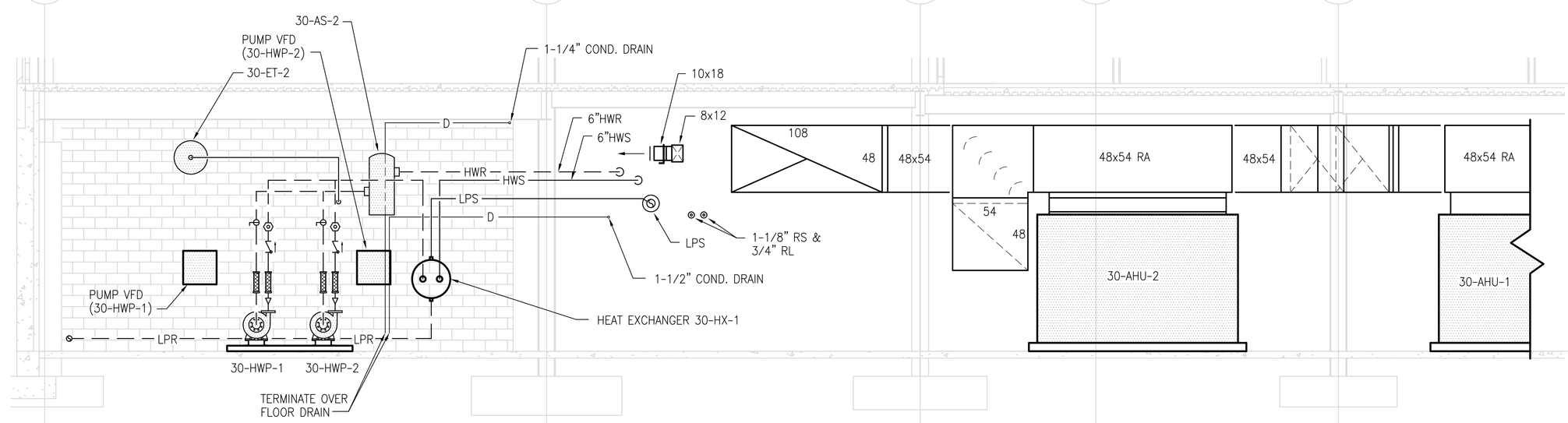

4 HVAC Section
SCALE: 1/4"=1'-0"

FOR CONSTRUCTION
FULLY SPRINKLERED

Revisions:	Date

CONSULTANTS:

HDR

HDR Architecture, Inc.

1101 King Street | Suite 400 | Alexandria, Virginia 22314-2944 | 703.518.8500

ARCHITECT/ENGINEERS:

ARCHITECTURE ENGINEERING INTERIOR DESIGN DESIGN/BUILD

ASTORINO

227 Fort Pitt Boulevard Pittsburgh Pennsylvania 15222
TEL 412 765 3700 FAX 412 765 3711 www.astorino.com

Drawing Title	HVAC Sections
Approved: Project Director	
Project Title	VA CARES CONSOLIDATION VAMC, PITTSBURGH, PA RESEARCH OFFICE BLDG.
Project Number	646CA2500R
Building Number	30
Location	VAPHS UNIVERSITY DRIVE
Date	08-18-10
Checked	JS
Drawn	RAN
Drawing Number	MH3-101
Dwg. -- of --	

Office of Facilities Management

Department of Veterans Affairs

VA FORM 08-6231, OCT 1978

P:\Project\200542500\CAD\UNIVERSITY DRIVE\Research Office Building\HVAC\MH3-101.dwg RNOLLA 06/24/10 - 07:58:2

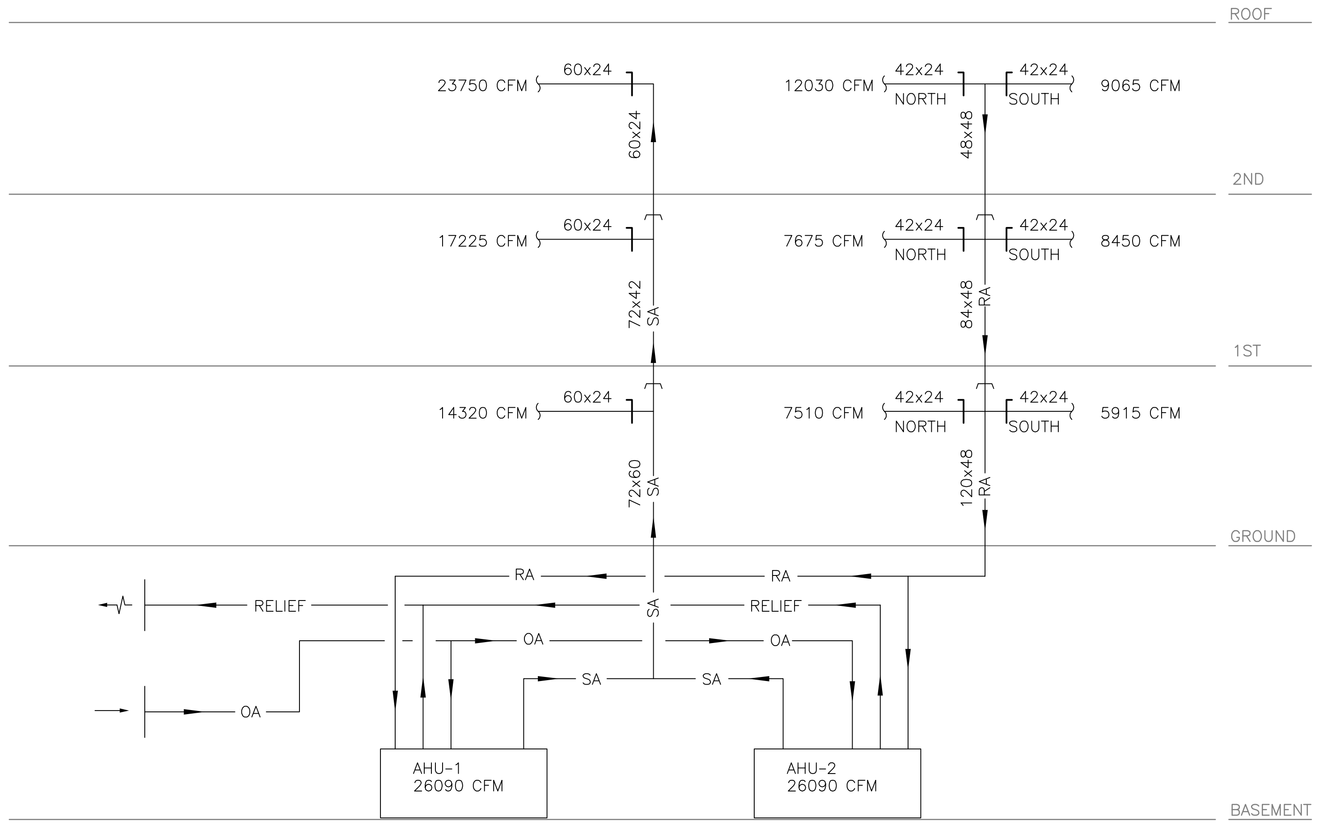

2 HVAC Air Handling Unit Riser Diagram
SCALE: N.T.S.

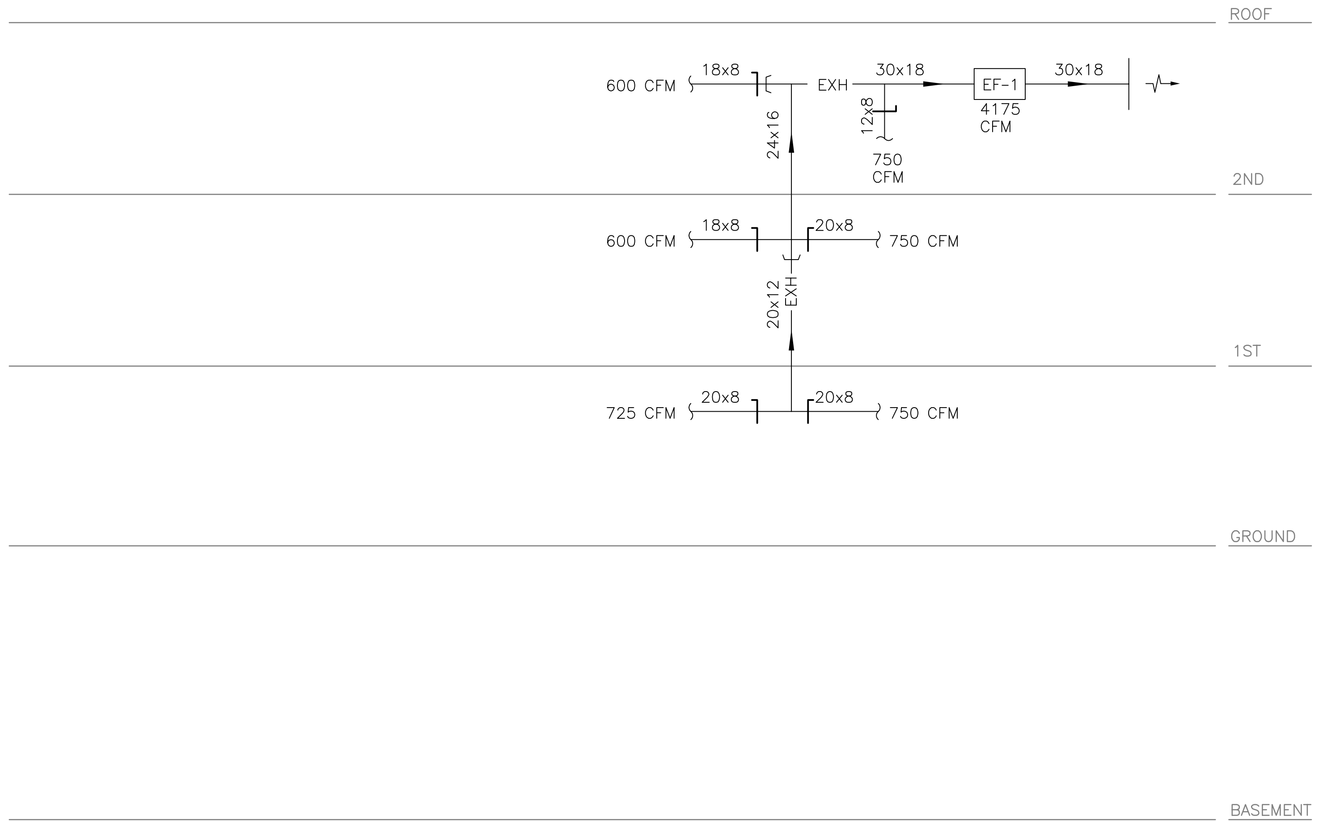

1 HVAC Exhaust Riser Diagram
SCALE: N.T.S.

FOR CONSTRUCTION
FULLY SPRINKLERED

Revisions:	Date

CONSULTANTS:

HDR Architecture, Inc.
1101 King Street | Suite 400 | Alexandria, Virginia 22314-2944 | 703.518.8500

ARCHITECT/ENGINEERS:

ARCHITECTURE
ENGINEERING
INTERIOR DESIGN
DESIGN/BUILD
ASTORINO
227 Fort Pitt Boulevard Pittsburgh Pennsylvania 15222
TEL 412 765 1700 FAX 412 765 1711 www.astorino.com

Drawing Title
HVAC Ductwork Riser Diagrams

Approved: Project Director

Project Title
VA CARES CONSOLIDATION
VAMC, PITTSBURGH, PA
RESEARCH OFFICE BLDG.

Location
VAPHS UNIVERSITY DRIVE

Date	Checked	Drawn
08-18-10	JS	RAN

Project Number
646CA2500R

Building Number
30

Drawing Number
MH4-101
Dwg. . of

Office of Facilities Management
Department of Veterans Affairs

VA FORM 08-6231, OCT 1978

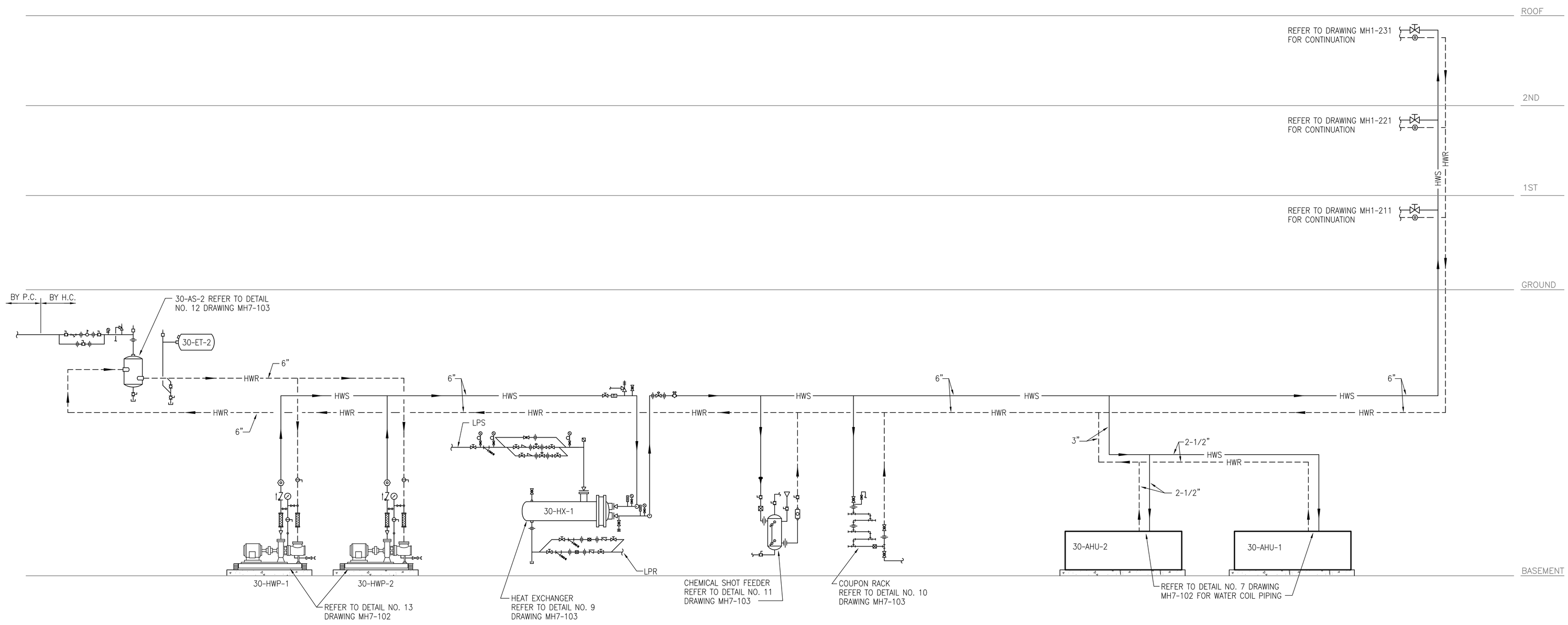

1 HVAC Hot Water Riser Diagram
SCALE: N.T.S.

FOR CONSTRUCTION
FULLY SPRINKLERED

Revisions:	Date

CONSULTANTS:

HDR

HDR Architecture, Inc.

1101 King Street | Suite 400 | Alexandria, Virginia 22314-2944 | 703.518.8500

ARCHITECT/ENGINEERS:

ARCHITECTURE ENGINEERING INTERIOR DESIGN DESIGN/BUILD

ASTORINO

227 Fort Pitt Boulevard Pittsburgh Pennsylvania 15222
TEL 412 765 1700 FAX 412 765 1711 www.astorino.com

Drawing Title: **HVAC Hot Water Riser Diagram**

Approved: Project Director

Project Title: **VA CARES CONSOLIDATION VAMC, PITTSBURGH, PA RESEARCH OFFICE BLDG.**

Location: **VAPHS UNIVERSITY DRIVE**

Date: **08-18-10** | Checked: **JS** | Drawn: **RAN**

Project Number: **646CA2500R**

Building Number: **30**

Drawing Number: **MH4-102**

Dwg. . of

Office of Facilities Management

Department of Veterans Affairs

VA FORM 08-6231, OCT 1978

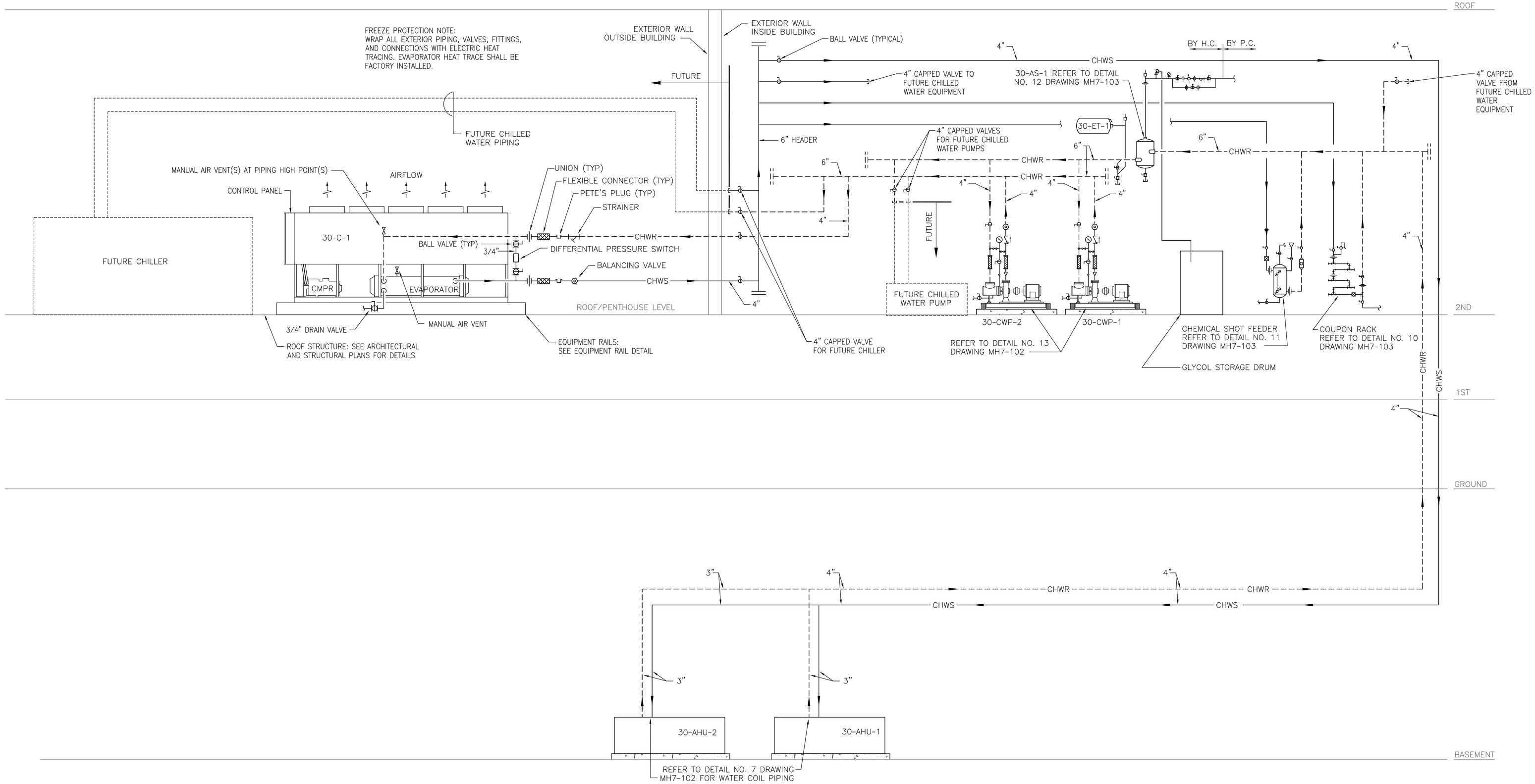

1 HVAC Chilled Water Riser Diagram
SCALE: N.T.S.

FOR CONSTRUCTION
FULLY SPRINKLERED

Revisions:	Date

CONSULTANTS:

HDR Architecture, Inc.
1101 King Street | Suite 400 | Alexandria, Virginia 22314-2944 | 703.518.8500

ARCHITECT/ENGINEERS:

ARCHITECTURE ENGINEERING INTERIOR DESIGN DESIGN/BUILD
ASTORINO
227 Fort Pitt Boulevard Pittsburgh Pennsylvania 15222
TEL 412 765 3700 FAX 412 765 3711 www.astorino.com

Drawing Title: **HVAC Chilled Water Riser Diagram**

Approved: Project Director

Project Title: **VA CARES CONSOLIDATION VAMC, PITTSBURGH, PA RESEARCH OFFICE BLDG.**

Location: **VAPHS UNIVERSITY DRIVE**

Date: **08-18-10** | Checked: **JS** | Drawn: **RAN**

Project Number: **646CA2500R**

Building Number: **30**

Drawing Number: **MH4-103**
Dwg. - of

Office of Facilities Management
Department of Veterans Affairs

VA FORM 08-6231, OCT 1978

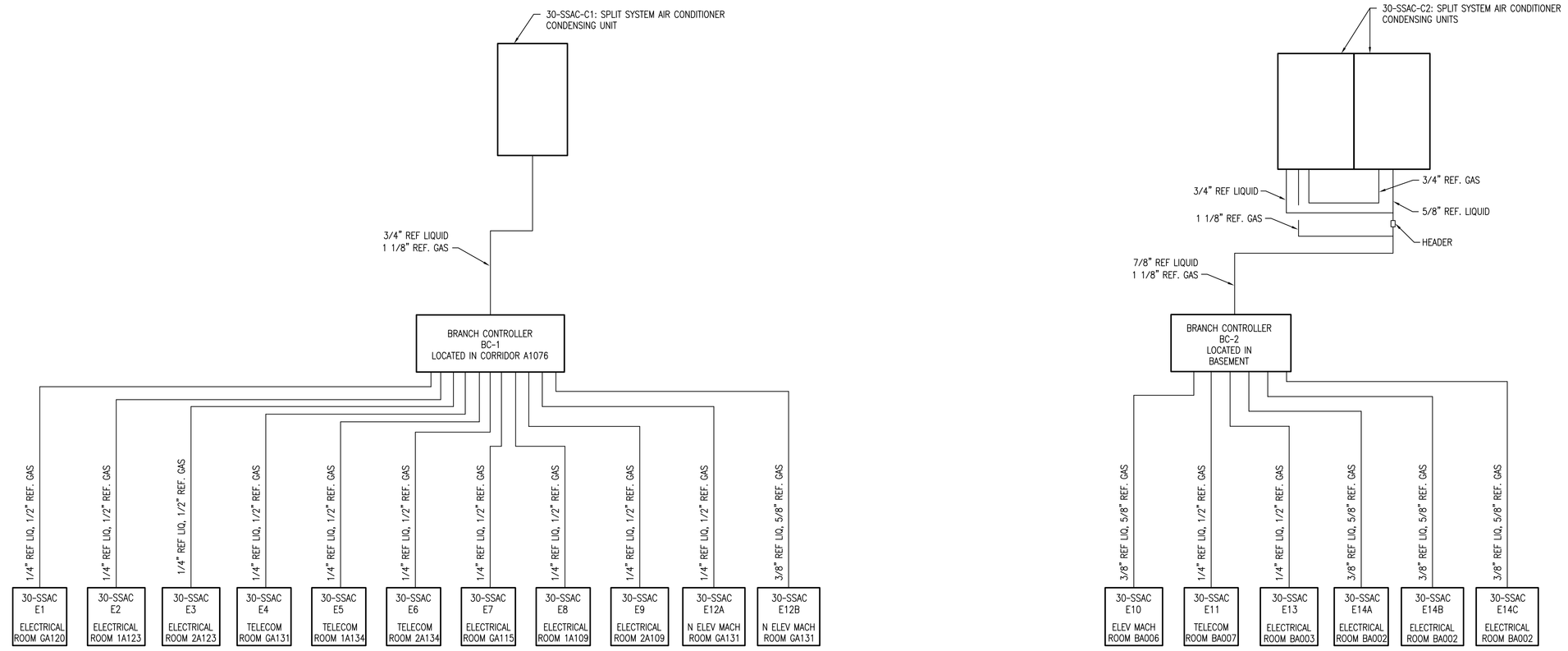

1 Split System Air Conditioners Piping Diagram
SCALE: NTS

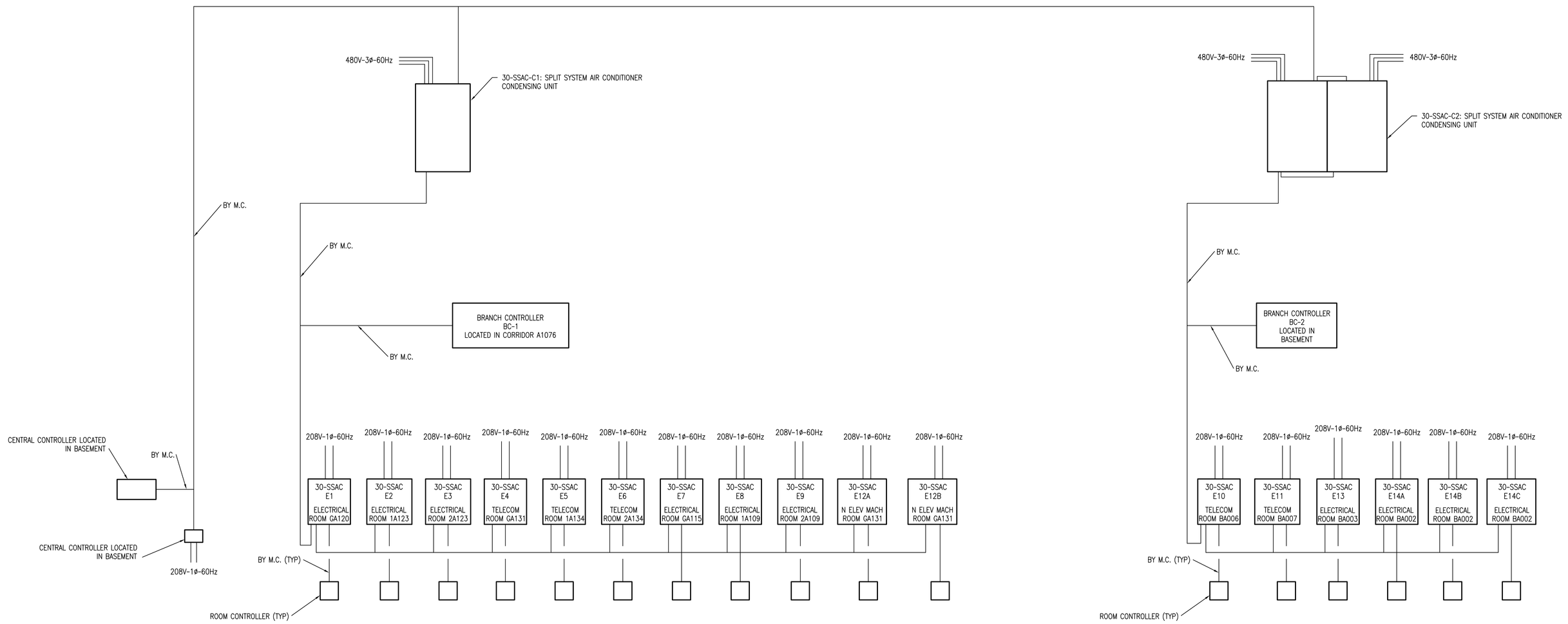

2 Split System Air Conditioners Wiring Diagram
SCALE: NTS

FOR CONSTRUCTION
FULLY SPRINKLERED

Revisions:	Date

CONSULTANTS:

HDR Architecture, Inc.
1101 King Street | Suite 400 | Alexandria, Virginia 22314-2944 | 703.518.8500

ARCHITECT/ENGINEERS:

ARCHITECTURE ENGINEERING INTERIOR DESIGN DESIGN/BUILD
ASTORINO
227 Fort Pitt Boulevard Pittsburgh Pennsylvania 15222
TEL 412 765 3700 FAX 412 765 3711 www.astorino.com

Drawing Title: **HVAC SPLIT SYSTEM DIAGRAMS**
Approved: Project Director

Project Title: **VA CARES CONSOLIDATION VAMC, PITTSBURGH, PA RESEARCH OFFICE BLDG.**
Location: **VAPHS UNIVERSITY DRIVE**
Date: **08-18-10** Checked: **JS** Drawn: **RAN**

Project Number: **646CA2500R**
Building Number: **30**
Drawing Number: **MH7-105**
Dwg. . of

Office of Facilities Management
Department of Veterans Affairs

VA FORM 08-6231, OCT 1978

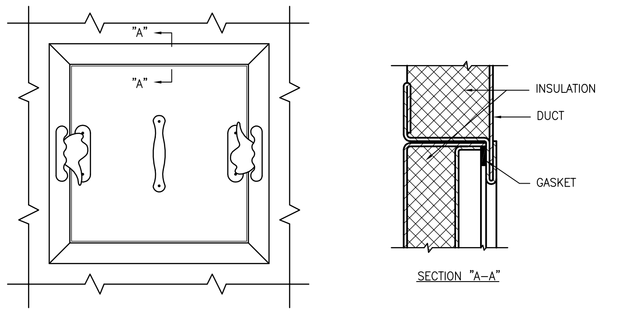

NOTE:
ACCESS PANELS SHALL BE USED ON EQUIPMENT AND DUCTWORK INSTALLED ABOVE FINISHED CEILINGS.

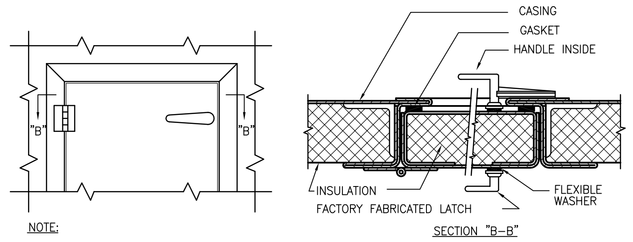

NOTE:
ACCESS DOORS SHALL BE USED ON AIR HANDLING UNITS AND DUCTWORK INSTALLED IN EQUIPMENT ROOMS.

NOTES:
1. LATCHES SHALL BE OF THE WEDGE TYPE TO CLOSE DOORS TIGHTLY.
2. HINGES ON THE ACCESS DOORS SHALL HAVE NON–CORROSIVE PINS.

1 ACCESS PROVISIONS DETAIL
NTS

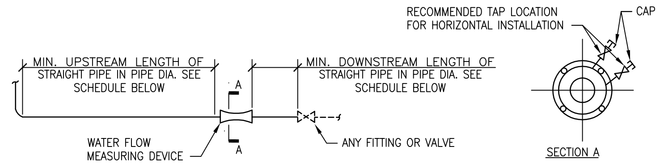

WATER FLOW MEASURING DEVICE INSTALLATION SCHEDULE

TYPE	MIN. UPSTREAM LENGTH OF STRAIGHT PIPE IN PIPE DIA.		MIN. DOWNSTREAM LENGTH OF STRAIGHT PIPE IN PIPE DIAMETERS
	FOR SIDE TEE	FOR VALVE OR OTHER FITTING	
ORIFICE FLANGE OR FLOATING BALL WITH IMPACT TUBE.	20	10	5
VENTURI, AUTOMATIC BALANCING CONTROL VALVE, OR INSERTION VELOCITY AVERAGING AND MEASURING TUBE	10	5	2

NOTES:
1. DIMENSIONS SHOWN IN SCHEDULE ARE MINIMUM REQUIRED. IF MANUFACTURER OF FURNISHED WATER FLOW MEASURING DEVICE RECOMMENDS A GREATER DIMENSION, USE THOSE DIMENSIONS.
2. INSTALL THE WATER FLOW MEASURING DEVICE SO THE FLOW ARROW ON THE DEVICE IS IN THE SAME DIRECTION AS THE FLOW.
3. THE WATER FLOW MEASURING DEVICE MAY BE INSTALLED IN EITHER HORIZONTAL OR VERTICAL PIPE. UNITS REQUIRING REMOTE METERS SHALL HAVE THE METER CONNECTIONS LOCATED ON OR NEAR THE SIDE WHEN INSTALLED IN HORIZONTAL PIPE. SEE SECTION A. THE METER CONNECTIONS CAN BE INSTALLED IN ANY POSITION WHEN INSTALLED IN VERTICAL PIPE.

2 WATER FLOW MEASURING DEVICE INSTALLATION DETAIL AND INSTALLATION SCHEDULE
NTS

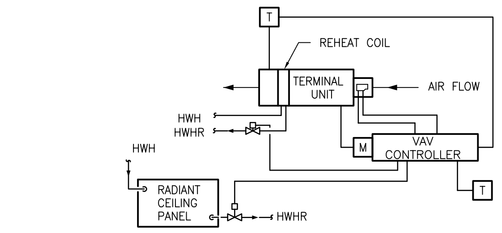

3 VAV AIR TERMINAL UNIT WITH REHEAT CONTROL DIAGRAM (TYPE "D") COMBINED WITH PERIMETER RADIANT CEILING PANELS
NTS

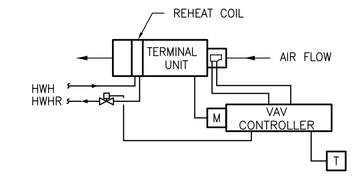

4 VAV AIR TERMINAL UNIT WITH REHEAT CONTROL DIAGRAM (TYPE "C")
NTS

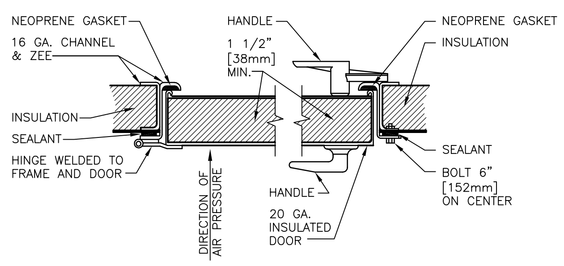

5 ACCESS PANEL FOR HIGH PRESSURE DUCT SYSTEMS DETAIL
NTS

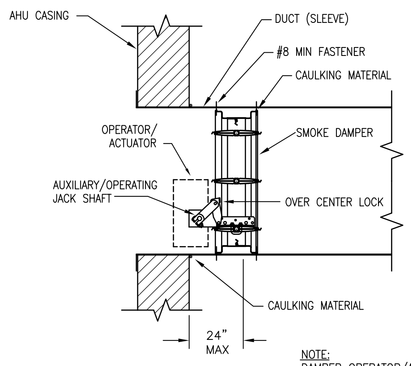

NOTE:
DAMPER OPERATOR/ACTUATOR SHALL BE FACTORY INSTALLED.

6 SMOKE DAMPER INSTALLATION DETAIL
NTS

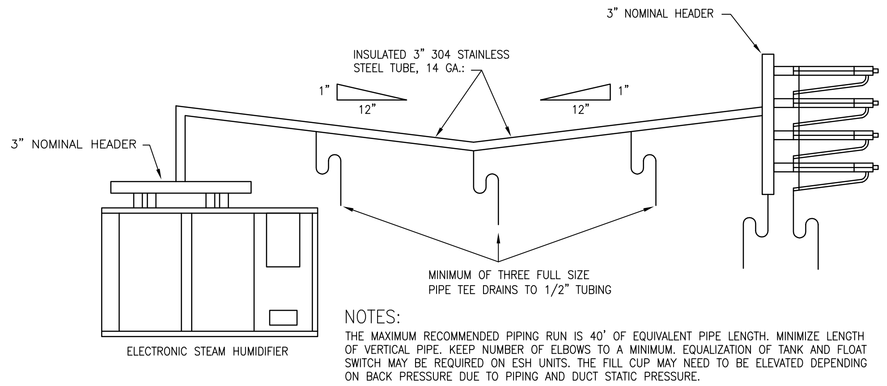

NOTES:
THE MAXIMUM RECOMMENDED PIPING RUN IS 40' OF EQUIVALENT PIPE LENGTH. MINIMIZE LENGTH OF VERTICAL PIPE. KEEP NUMBER OF ELBOWS TO A MINIMUM. EQUALIZATION OF TANK AND FLOAT SWITCH MAY BE REQUIRED ON ESH UNITS. THE FILL CUP MAY NEED TO BE ELEVATED DEPENDING ON BACK PRESSURE DUE TO PIPING AND DUCT STATIC PRESSURE.

7 STEAM DISTRIBUTION PIPING IN AIR HANDLING UNITS
NTS

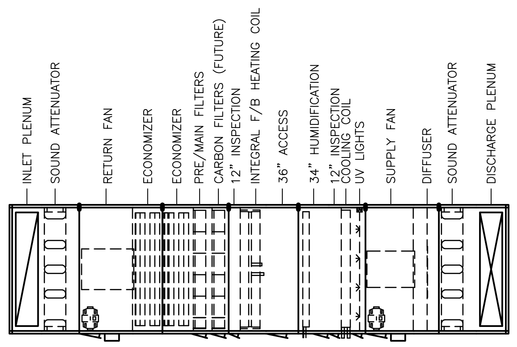

NOTES:
1. ACCESS DOORS SHALL BE GASKETED AND HINGED TO OPEN AGAINST FAN OPERATING PRESSURE TO PREVENT AIR LEAKAGE.
2. MINIMUM ACCESS DOOR WIDTH SHALL BE 24" [610mm].
3. ACCESS DOOR HEIGHT SHALL BE DETERMINED BY UNIT CASING BUT NOT TO EXCEED 6'–0" [1829mm].
4. ACCESS DOORS ON FAN SUCTION SIDE SHALL OPEN OUTWARD.
5. ACCESS DOORS ON FAN DISCHARGE SIDE SHALL OPEN INWARD.

8 AIR HANDLING UNIT COMPONENTS AND ACCESS DOOR SWING DETAIL
1/8" = 1'–0"

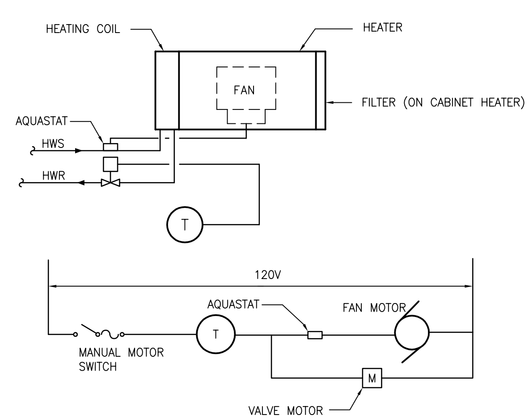

9 HOT WATER UNIT HEATER AND CABINET HEATER CONTROLS AND DEVICES DETAIL
NTS

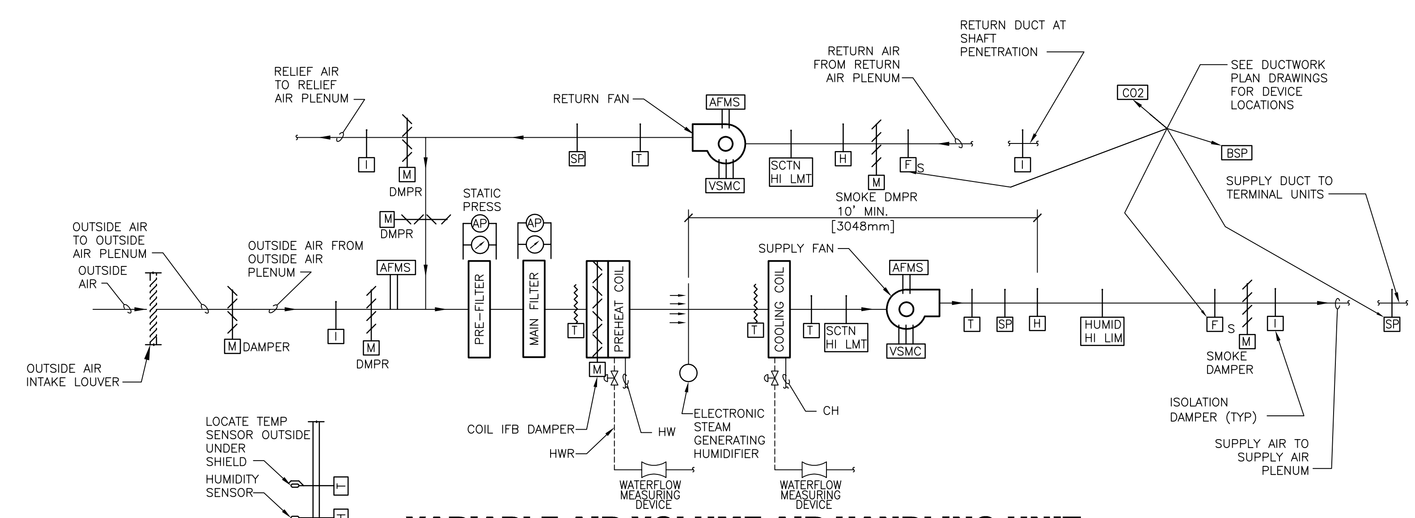

10 VARIABLE AIR VOLUME AIR HANDLING UNIT WITH ECONOMIZER CONTROL DIAGRAM
NTS

FOR CONSTRUCTION
FULLY SPRINKLERED

Revisions:	Date

CONSULTANTS:

HDR Architecture, Inc.
1101 King Street | Suite 400 | Alexandria, Virginia 22314-2944 | 703.518.8500

ARCHITECT/ENGINEERS:

ARCHITECTURE ENGINEERING INTERIOR DESIGN DESIGN/BUILD
ASTORINO
227 Fort Pitt Boulevard Pittsburgh Pennsylvania 15222
TEL 412.765.1700 FAX 412.765.1711 www.astorino.com

Drawing Title: **HVAC Unit, Device and Contol Details and Diagrams**
Approved: Project Director

Project Title: **VA CARES CONSOLIDATION VAMC, PITTSBURGH, PA RESEARCH OFFICE BLDG.**
Location: **VAPHS UNIVERSITY DRIVE**
Date: **08-18-10** | Checked: **JS** | Drawn: **RAN**

Project Number: **646CA2500R**
Building Number: **30**
Drawing Number: **MH7-104**
Dwg. . of

Office of Facilities Management
Department of Veterans Affairs

VA FORM 08–6231, OCT 1978

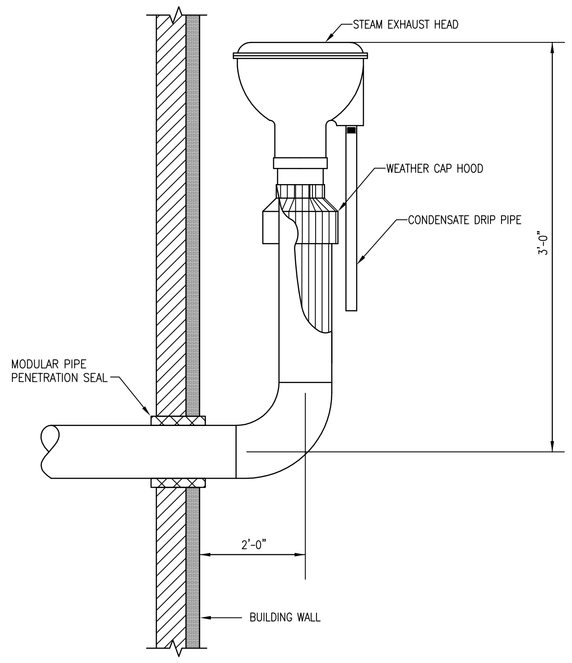

1 STEAM RELIEF STACK HEAD DETAIL
NTS

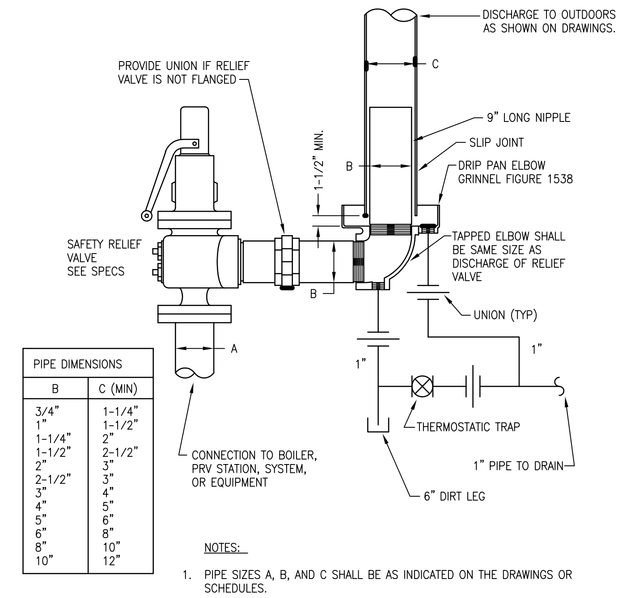

PIPE DIMENSIONS	
B	C (MIN)
3/4"	1-1/4"
1"	1-1/2"
1-1/4"	2"
1-1/2"	2-1/2"
2"	3"
2-1/2"	3"
3"	4"
4"	5"
5"	6"
6"	8"
8"	10"
10"	12"

NOTES:
1. PIPE SIZES A, B, AND C SHALL BE AS INDICATED ON THE DRAWINGS OR SCHEDULES.

2 STEAM RELIEF VALVE DETAIL
NTS

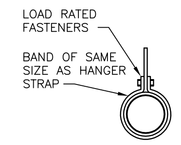

HANGER STRAPS OR RODS			
MAX. DUCT ø IN. [mm]	QUANTITY/SIZE IN. [mm]	MAX. LOAD LBS. [kg]	MAX. SPACING IN. [mm]
26 [650]	ONE 1 [25] x 22 GA STRAP	260 [119]	144 [3658]

NOTE:
TABULATED DATA FROM SMACNA ALLOWS FOR DUCT REINFORCING AND INSULATION, BUT NO EXTERNAL LOAD.

3 ROUND DUCT HANGERS DETAIL
NTS

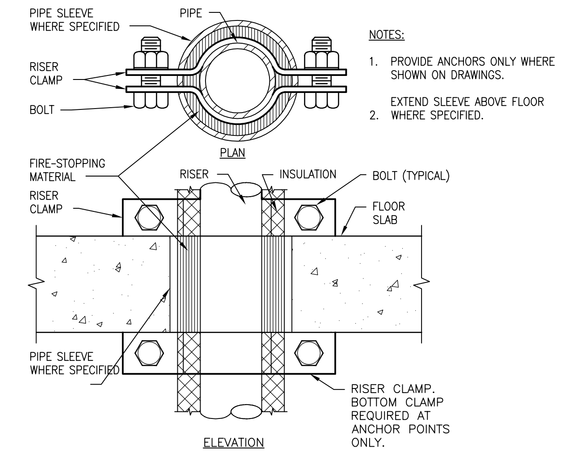

NOTES:
1. PROVIDE ANCHORS ONLY WHERE SHOWN ON DRAWINGS.
   EXTEND SLEEVE ABOVE FLOOR
2. WHERE SPECIFIED.

4 SUPPORT/ANCHOR FOR PIPE RISERS DETAIL
NTS

DESIGNER'S NOTE:
SHOW REQUIRED ANCHORS ON PLAN, SECTIONS OR DIAGRAMS. THIS DETAIL IS RARELY REQUIRED. PIPING IS USUALLY IN A CHASE.

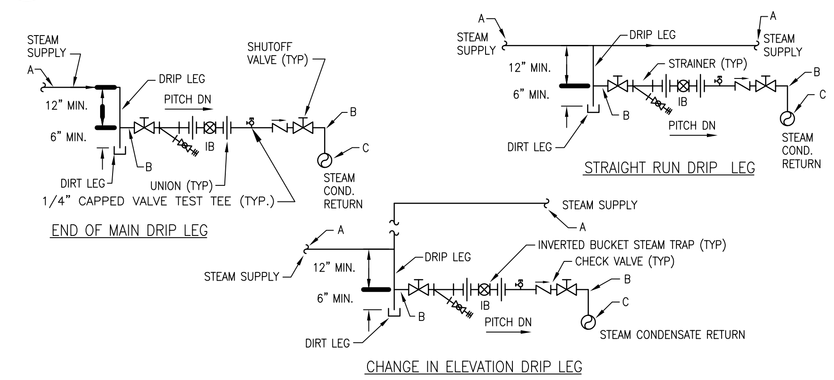

NOTES:
1. PIPE SIZES A, B, AND C SHALL BE AS INDICATED ON THE DRAWINGS OR SCHEDULES. PIPE SIZE B SHALL BE 3/4" MINIMUM.
2. STEAM SHUTOFF VALVES SHALL BE: 2" & SMALLER: BALL (FULL PORT) OR GATE VALVES; 2-1/2" & LARGER: GATE VALVES
3. INSTALL DRIP LEGS EVERY 100 FEET IN STRAIGHT RUN WHEN PIPE IS PITCHED DOWN IN DIRECTION OF FLOW AND EVERY 50 FEET WHEN PIPE IS PITCHED DOWN IN DIRECTION OPPOSITE OF STEAM FLOW.
4. DRIP LEGS: PIPE FULL SIZE UP TO 4" STEAM MAINS; 4" FOR 4", 5", 6", AND 8" STEAM MAINS; AND HALF SIZE FOR STEAM MAINS LARGER THAN 8".

5 STEAM DRIP LEG DETAIL
NTS

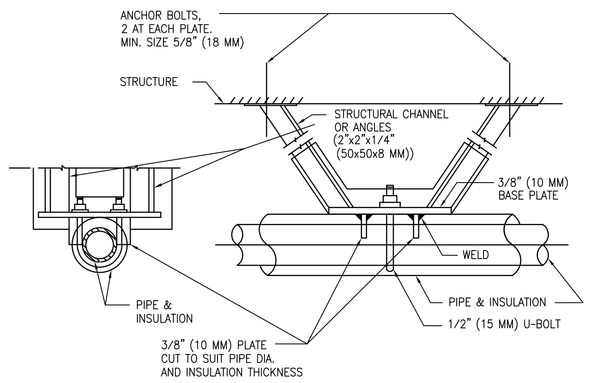

NOTE: INSULATE ANCHOR AS INDICATED FOR COLD PIPING.

6 HORIZONTAL PIPE ANCHOR DETAIL
NTS

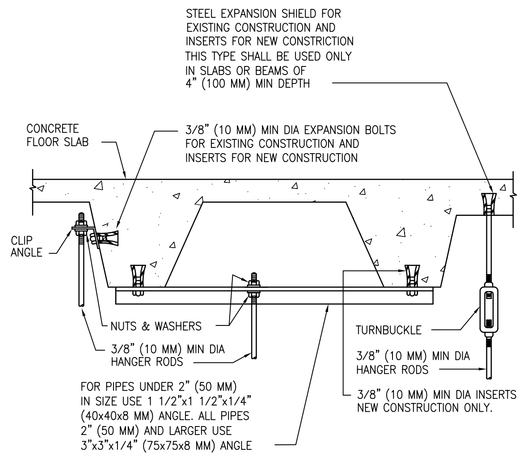

7 METHOD OF SECURING HANGER RODS IN CONCRETE SLABS AND BEAMS DETAIL
NTS

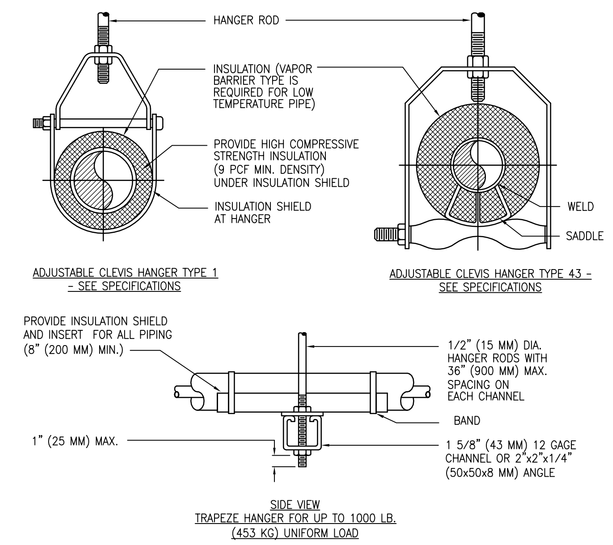

MAXIMUM PIPE/TUBING SUPPORT SPACING												
NOM. SIZE	IN. (MM)	THRU 3/4 THRU (20)	1 (25)	1 1/4 (32)	1 1/2 (40)	2 (50)	2 1/2 (65)	3 (75)	4 (100)	5 (125)	6 (150)	8 (200)
PIPE	FT. (M)	7 (2.1)	7 (2.1)	7 (2.1)	9 (2.7)	10 (3.0)	11 (3.4)	12 (3.7)	14 (4.1)	16 (4.9)	17 (5.2)	19 (6.8)
TUBING	FT. (M)	5 FT 5 FT	6 (1.8)	7 (2.1)	8 (2.4)	8 (2.4)	9 (2.7)	10 (3.0)	12 (3.7)	13 (4.0)	14 (4.1)	16 (4.9)
NOTE: FOR TRAPEZE HANGER TAKE SPACING OF SMALLEST SIZE ON TRAPEZE.												

8 TYPICAL PIPE HANGERS DETAIL
NTS

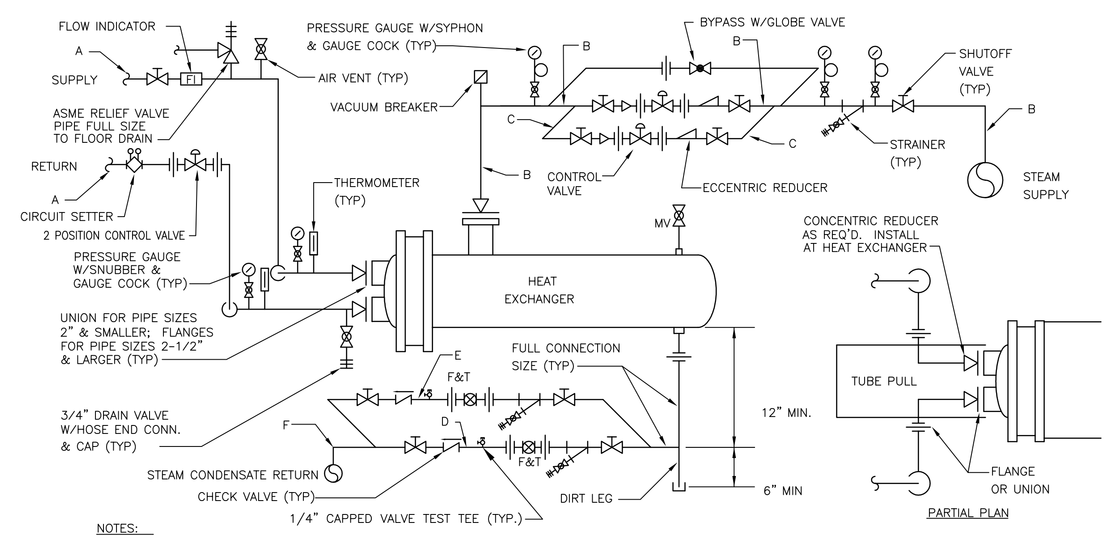

NOTES:
1. PIPE SIZES A, B, C, D, E AND F SHALL BE AS INDICATED ON THE DRAWINGS OR SCHEDULES.
2. CONTROL VALVE BYPASS PIPE SIZE SHALL BE 1 PIPE SIZE SMALLER THAN PIPE SIZE A.
3. STEAM SHUTOFF VALVES SHALL BE: 2" & SMALLER: BALL (FULL PORT) OR GATE VALVES; 2-1/2" & LARGER: GATE VALVES
4. WATER SYSTEM SHUTOFF VALVE SHALL BE: 2" & SMALLER: BALL (FULL PORT) OR PLUG VALVES; 2-1/2" & LARGER: BUTTERFLY OR PLUG VALVES
5. IN LIEU OF CIRCUIT SETTER VALVE, A BALANCING VALVE WITH GEAR OPERATORS (4" & LARGER ONLY), POSITION INDICATORS, AND MAXIMUM ADJUSTABLE STOPS MAY BE USED: 2" AND SMALLER: BALL (REDUCED PORT) OR PLUG VALVES; 2-1/2" AND LARGER: BUTTERFLY OR PLUG VALVES
6. SIZE CONTROL VALVES FOR 1/3 AND 2/3 CAPACITY

9 STEAM TO WATER HEAT EXCHANGER DETAIL
NTS

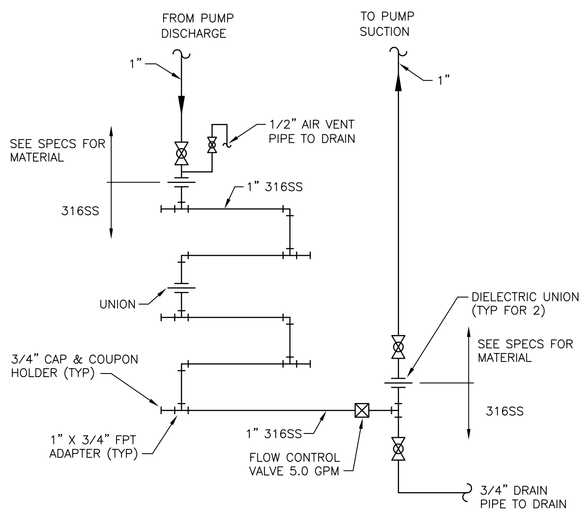

10 COUPON RACK DETAIL
NTS

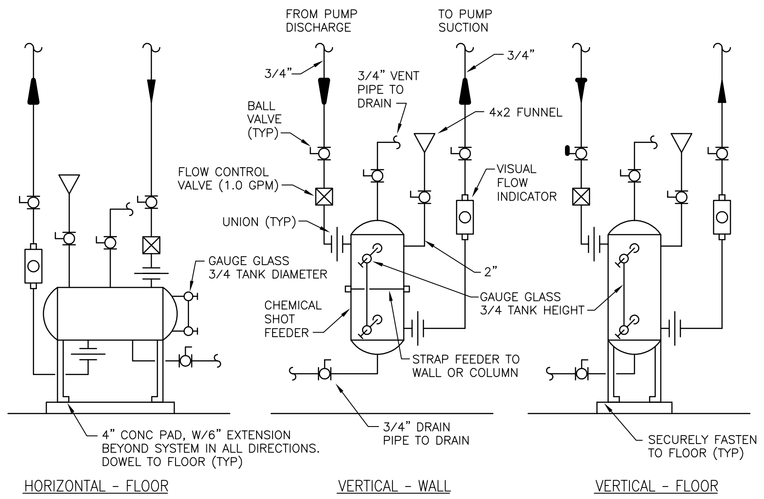

11 CHEMICAL SHOT FEEDER DETAIL
NTS

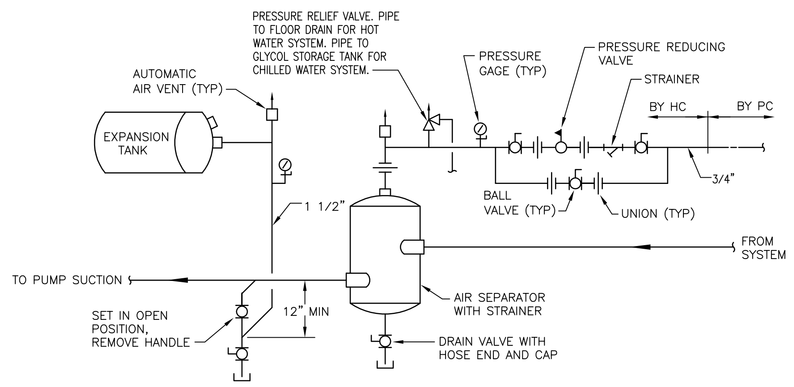

12 AIR SEPARATOR / EXPANSION TANK DETAIL
NTS

FOR CONSTRUCTION
FULLY SPRINKLERED

Revisions:	Date

CONSULTANTS:

HDR Architecture, Inc.
1101 King Street | Suite 400 | Alexandria, Virginia 22314-2944 | 703.518.8500

ARCHITECT/ENGINEERS:

ARCHITECTURE ENGINEERING INTERIOR DESIGN DESIGN/BUILD
ASTORINO
227 Fort Pitt Boulevard Pittsburgh Pennsylvania 15222
TEL 412 765 1700 FAX 412 765 1711 www.astorino.com

Drawing Title: **HVAC Piping Details**

Approved: Project Director

Project Title: **VA CARES CONSOLIDATION VAMC, PITTSBURGH, PA RESEARCH OFFICE BLDG.**

Location: **VAPHS UNIVERSITY DRIVE**

Date: **08-18-10** | Checked: **JS** | Drawn: **RAN**

Project Number: **646CA2500R**

Building Number: **30**

Drawing Number: **MH7-103**

Dwg. . of

Office of Facilities Management

Department of Veterans Affairs

VA FORM 08-6231, OCT 1978

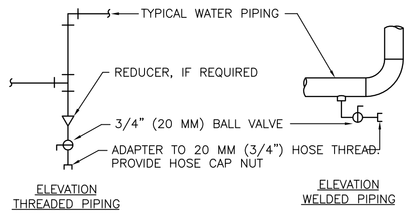

NOTES:
1. DRAIN ALL LOW POINTS AS INDICATED ABOVE.
2. WHERE SCALE POCKETS ARE SHOWN ON PIPE RISER DIAGRAMS AND/OR PLANS LOCATE DRAIN AT BOTTOM OF SCALE POCKET.

1 CHILLED AND HOT WATER PIPING DRAIN VALVE CONNECTIONS DETAIL

NTS

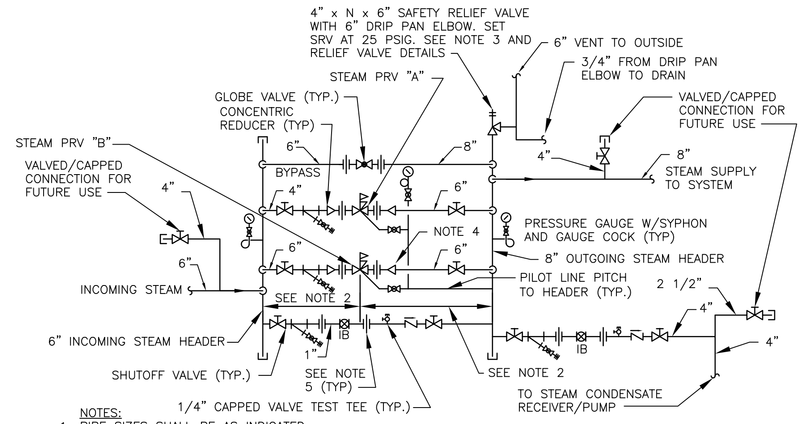

NOTES:
1. PIPE SIZES SHALL BE AS INDICATED.
2. PROVIDE 10 PIPE DIAMETERS TO UPSTREAM HEADER AND 20 PIPE DIAMETERS TO DOWNSTREAM HEADER. TYPICAL FOR ALL PRESSURE REDUCING VALVES.
3. PROVIDE MULTIPLE SAFETY RELIEF VALVES IF CAPACITY OF 4" VALVE IS EXCEEDED.
4. CONCENTRIC INCREASER OR NOISE SUPPRESSOR WHEN INDICATED (TYP).
5. PROVIDE FLANGES FOR PIPE SIZES 2-1/2" AND LARGER; UNIONS FOR PIPE SIZES 2" AND SMALLER.
6. SHUTOFF VALVES SHALL BE GATE VALVES
7. PRV "A": 1 1/2", 2723#/HR, 70-15 PSIG, MAX CV=18.8, CAPACITY=78%.
8. PRV "B": 2", 46353#/HR, 70-15 PSIG, MAX CV=32.0, CAPACITY=91%.

2 PRESSURE REDUCING STATION

NTS

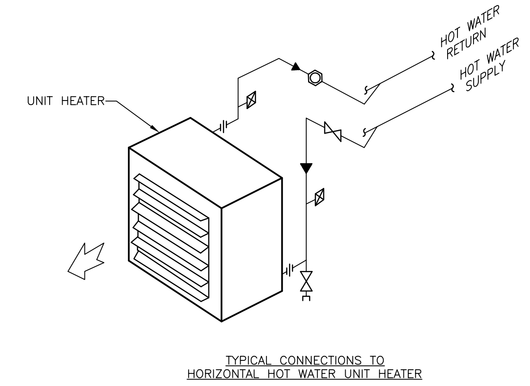

3 CONNECTIONS TO HORIZONTAL HOT WATER UNIT HEATER DETAIL

NTS

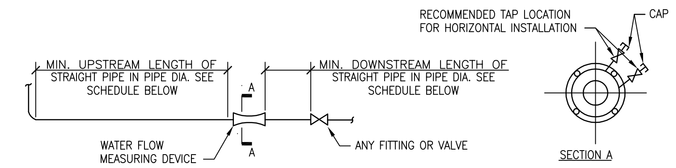

WATER FLOW MEASURING DEVICE INSTALLATION SCHEDULE			
TYPE	MIN. UPSTREAM LENGTH OF STRAIGHT PIPE IN PIPE DIA.		MIN. DOWNSTREAM LENGTH OF STRAIGHT PIPE IN PIPE DIAMETERS
	FOR SIDE TEE	FOR VALVE OR OTHER FITTING	
ORIFICE FLANGE OR FLOATING BALL WITH IMPACT TUBE.	20	10	5
VENTURI, AUTOMATIC BALANCING CONTROL VALVE, OR INSERTION VELOCITY AVERAGING AND MEASURING TUBE	10	5	2

NOTES:
1. DIMENSIONS SHOWN IN SCHEDULE ARE MINIMUM REQUIRED. IF MANUFACTURER OF FURNISHED WATER FLOW MEASURING DEVICE RECOMMENDS A GREATER DIMENSION, USE THOSE DIMENSIONS.
2. INSTALL THE WATER FLOW MEASURING DEVICE SO THE FLOW ARROW ON THE DEVICE IS IN THE SAME DIRECTION AS THE FLOW.
3. THE WATER FLOW MEASURING DEVICE MAY BE INSTALLED IN EITHER HORIZONTAL OR VERTICAL PIPE. UNITS REQUIRING REMOTE METERS SHALL HAVE THE METER CONNECTIONS LOCATED ON OR NEAR THE SIDE WHEN INSTALLED IN HORIZONTAL PIPE. SEE SECTION A. THE METER CONNECTIONS CAN BE INSTALLED IN ANY POSITION WHEN INSTALLED IN VERTICAL PIPE.

4 WATER FLOW MEASURING DEVICE INSTALLATION DETAIL AND INSTALLATION SCHEDULE

NTS

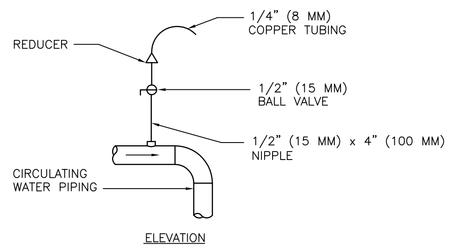

NOTES:
1. VENT ALL HIGH POINTS INDICATED ABOVE.
2. IF AUTOMATIC AIR VENTS ARE USED, PIPE DISCHARGE TO DRAIN

5 AIR VENT DETAIL

NTS

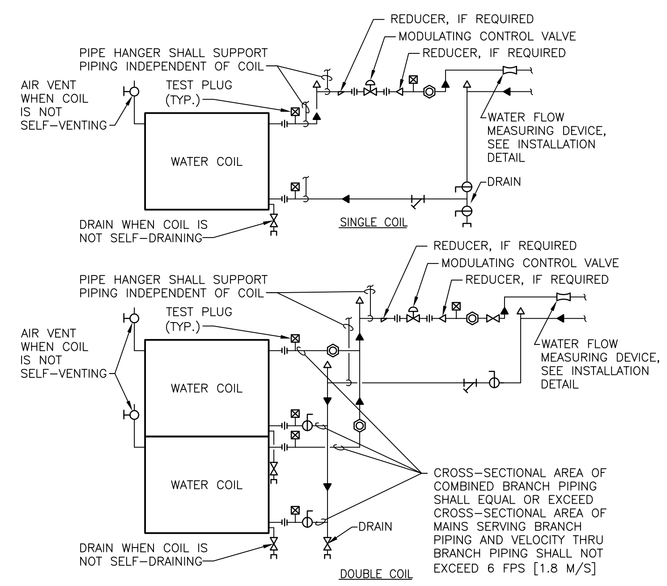

NOTES:
1. WHEN COIL IS INCLUDED IN CASING MOUNTED ON VIBRATION ISOLATORS THE FIRST 2 HANGERS FOR EACH PIPE SHALL BE SPRING & NEOPRENE TYPE. TYPE "H" FOR 4" [100mm]Ø PIPE & SMALLER. TYPE "H-P" FOR 5" [125mm]Ø PIPE & LARGER.
2. PIPING SHALL BE INSTALLED IN SUCH MANNER THAT IT WILL NOT BLOCK THE SWING OR USE OF ACCESS DOORS OR PANELS; NEITHER SHALL IT BLOCK THE SERVICING OF FILTERS, VALES, OR EQUIPMENT.
3. THE WATER FLOW MEASURING DEVICE MAY BE INSTALLED IN THE SUPPLY PIPING IF THE REQUIRED MINIMUM UPSTREAM AND DOWNSTREAM DIMENSIONS CANNOT BE OBTAINED IN THE RETURN PIPING.

7 CONNECTIONS TO WATER COILS DETAIL

NTS

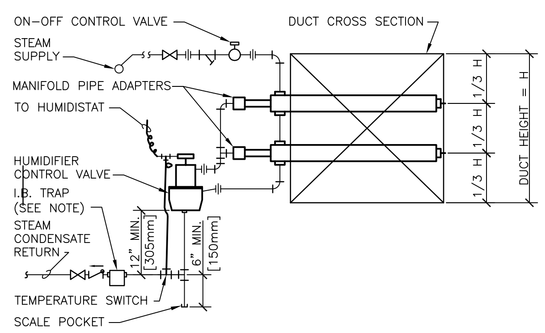

9 CONNECTIONS TO HORIZONTAL TYPE STEAM HUMIDIFIER WITH MULTIPLE DIFFUSERS DETAIL

NTS

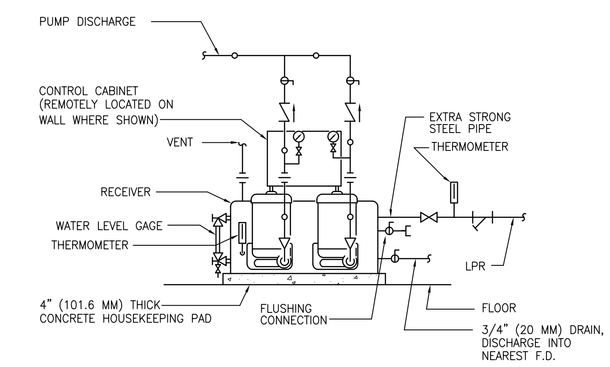

10 PIPING CONNECTIONS TO CONDENSATE PUMP AND FLASH TANK

NTS

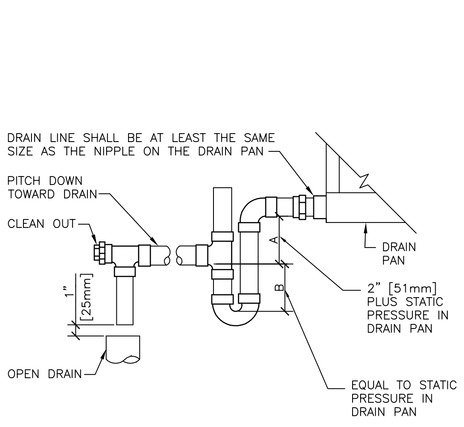

6 AIR HANDLING UNIT DRAIN TRAP DETAIL

NTS

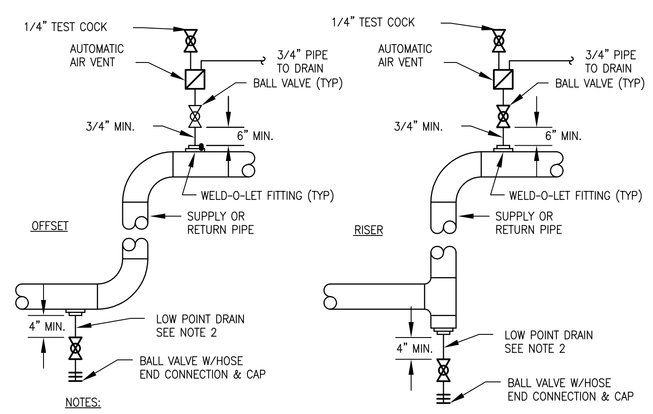

NOTES:
1. TYPICAL FOR ALL HIGH POINTS, LOW POINTS, AND OFFSETS.
2. LOW POINT DRAINS SHALL BE 3/4" FOR PIPE SIZES 1-1/2" AND SMALLER, 1" FOR PIPE SIZES 2" AND 2-1/2", 1-1/2" FOR PIPE SIZES 3" AND 4", AND 2" ON ALL PIPING 6 INCHES AND LARGER.

9 DRAIN AND VENT DETAIL

NTS

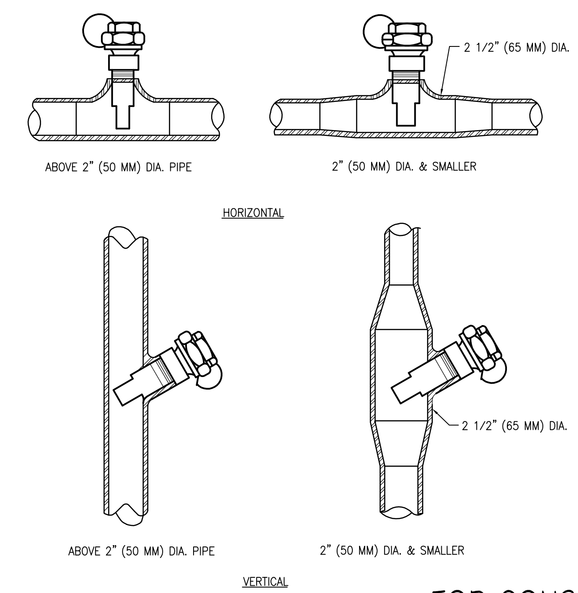

14 INSTALLATION OF THERMOMETER WELLS DETAIL

NTS

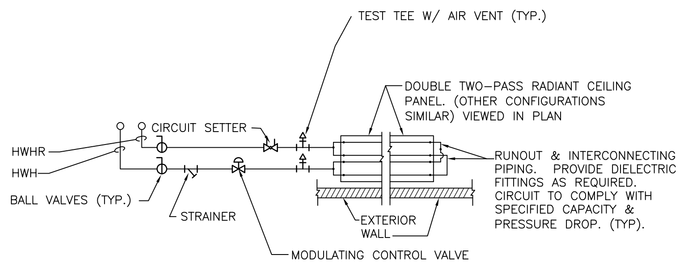

11 HOT WATER RADIANT CEILING PANEL PIPING DETAIL

NTS

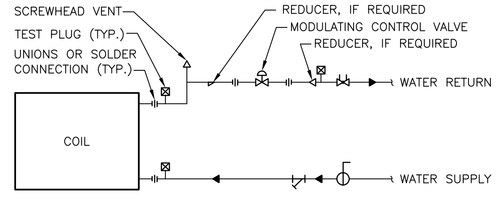

12 TYPICAL COIL PIPING CONNECTIONS TO VAV BOX REHEAT COILS DETAIL

NTS

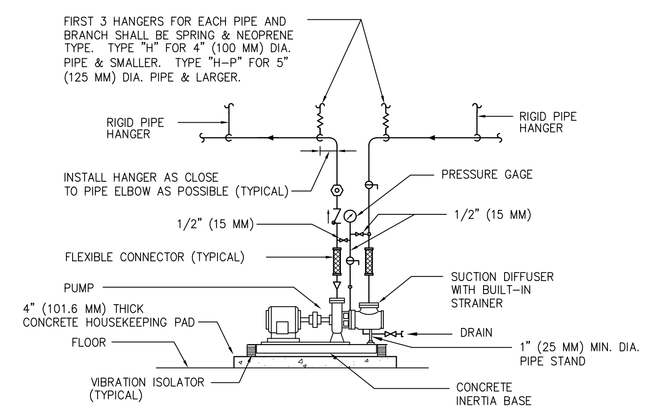

NOTE: SEE SPECIFICATION SECTION "PUMPS" FOR Y STRAINER OPTION

13 PIPING CONNECTIONS TO FLOOR MOUNTED SINGLE SUCTION WATER PUMPS

NTS

FOR CONSTRUCTION
FULLY SPRINKLERED

Revisions:	Date

CONSULTANTS:

HDR Architecture, Inc.
1101 King Street | Suite 400 | Alexandria, Virginia 22314-2944 | 703.518.8500

ARCHITECT/ENGINEERS:

ARCHITECTURE ENGINEERING INTERIOR DESIGN DESIGN/BUILD
ASTORINO
227 Fort Pitt Boulevard Pittsburgh Pennsylvania 15222
TEL 412 765 1700 FAX 412 765 1711 www.astorino.com

Drawing Title: **HVAC Piping Details**

Approved: Project Director

Project Title: **VA CARES CONSOLIDATION VAMC, PITTSBURGH, PA RESEARCH OFFICE BLDG.**

Location: **VAPHS UNIVERSITY DRIVE**

Date: **08-18-10** | Checked: **JS** | Drawn: **RAN**

Project Number: **646CA2500R**

Building Number: **30**

Drawing Number: **MH7-102**

Dwg: . of

Office of Facilities Management

Department of Veterans Affairs

VA FORM 08-6231, OCT 1978

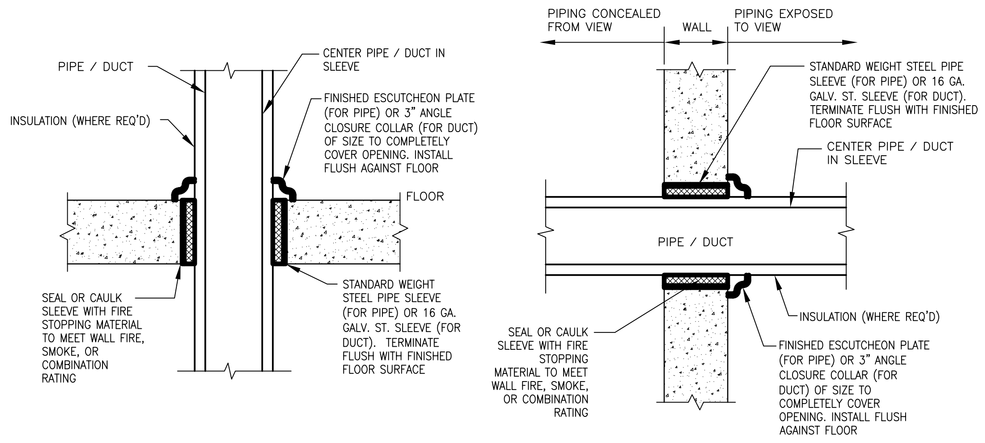

NOTES:
1. INSTALL ALL MATERIALS IN ACCORDANCE WITH MANUFACTURER'S PRINTED INSTALLATION INSTRUCTIONS.
2. SEE ARCHITECTURAL AND STRUCTURAL DRAWINGS FOR FLOOR CONSTRUCTION MATERIALS.

1 PIPE/DUCT PENETRATION OF FIRE/SMOKE BARRIERS DETAIL

NTS

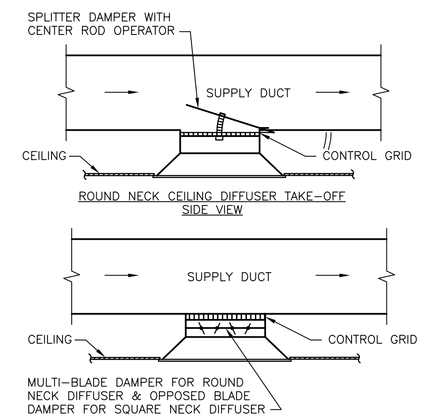

2 CEILING DIFFUSER DUCTWORK TAKE-OFFS DETAIL

NTS

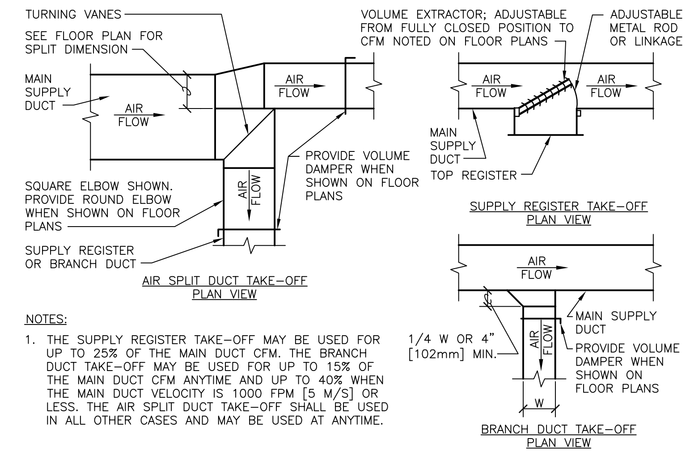

NOTES:
1. THE SUPPLY REGISTER TAKE-OFF MAY BE USED FOR UP TO 25% OF THE MAIN DUCT CFM. THE BRANCH DUCT TAKE-OFF MAY BE USED FOR UP TO 15% OF THE MAIN DUCT CFM ANYTIME AND UP TO 40% WHEN THE MAIN DUCT VELOCITY IS 1000 FPM [5 M/S] OR LESS. THE AIR SPLIT DUCT TAKE-OFF SHALL BE USED IN ALL OTHER CASES AND MAY BE USED AT ANYTIME.

3 SUPPLY DUCTWORK TAKE-OFFS DETAIL

NTS

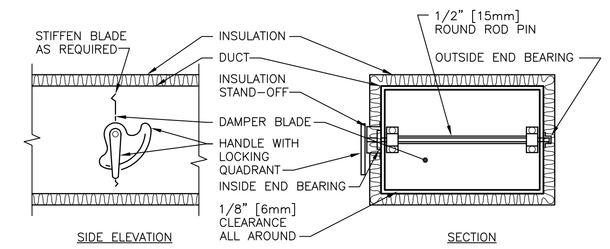

NOTE:
1. DELETE INSULATION STAND-OFF ON DUCTWORK WITHOUT EXTERIOR INSULATION.
2. DETAIL SHOWS SINGLE BLADE DAMPER. DAMPER INSTALLATION SHALL BE SIMILAR FOR MULTI-BLADE DAMPERS & ROUND DAMPERS.

4 VOLUME DAMPER DETAIL

NTS

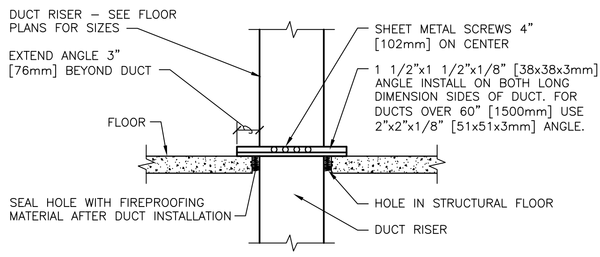

LOW PRESSURE DUCT RISER SUPPORT

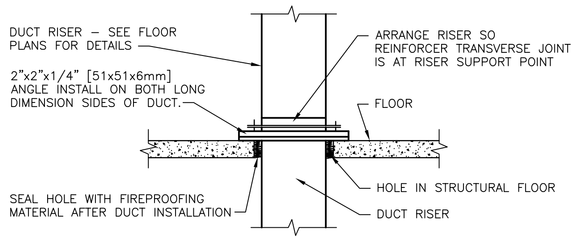

MEDIUM AND HIGH PRESSURE DUCT RISER SUPPORT

NOTE:
ALL DUCT WORK RISERS WHICH ARE RUN EXPOSED, SUCH AS THRU ATTIC FLOORS AND FAN ROOM FLOORS SHALL BE PROVIDED WITH A 3" [76mm] HIGH CONCRETE CURB AROUND OPENING FOR DUCT.

5 LOW, MEDIUM AND HIGH PRESSURE DUCT RISER SUPPORTS DETAIL

NTS

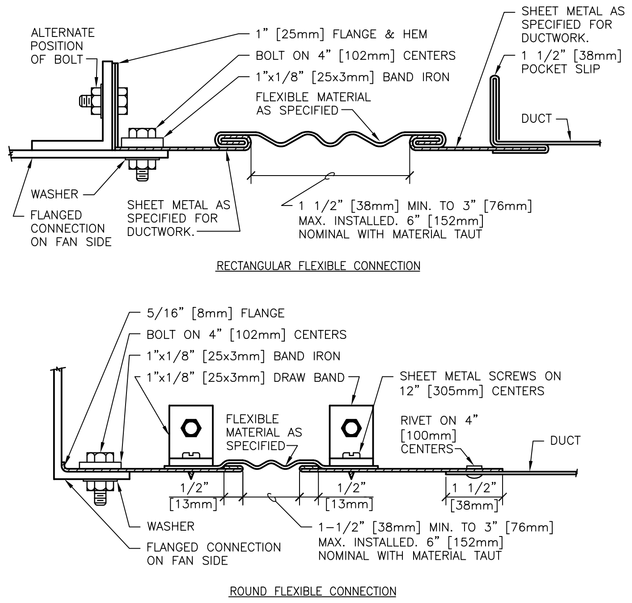

6 RECTANGULAR AND ROUND FLEXIBLE CONNECTION DETAIL

NTS

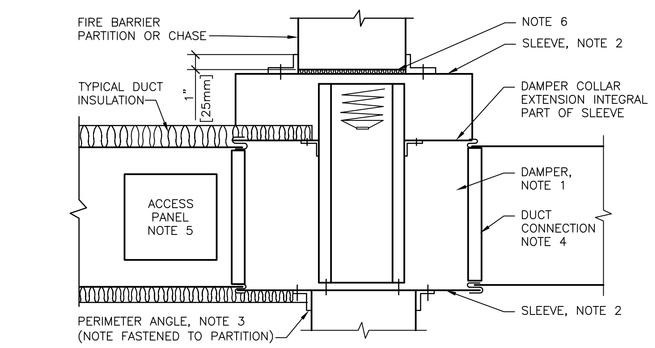

NOTES:
1. A VERTICAL DAMPER IS SHOWN. HORIZONTAL DAMPER INSTALLATION, IS SIMILAR. FOLLOW DAMPER MANUFACTURER'S INSTRUCTIONS, INCLUDING FASTENER OPTIONS AND GAGES FOR SLEEVE AND PERIMETER ANGLES. FIRE DAMPERS MUST BE INSTALLED IN THE PARTITION OR FLOOR AND NOT OUTSIDE THE PENETRATION.
2. GALVANIZED SLEEVE: GAGE NOT LESS THAN CONNECTING DUCT. FASTEN SLEEVE TO DAMPER FRAME AND TO PERIMETER ANGLES.
3. PERIMETER ANGELS: GALVANIZED STEEL, NOT LESS THAN 1 1/2"x1 1/2" [38x38mm], 14 GAGE, TO PROVIDE 1" [25mm] MINIMUM OVERLAP OF OPENING ON ALL 4 SIDES.
4. BREAKAWAY DUCT CONNECTION: CONTRACTOR'S OPTION OF TYPES SHOWN IN SMACNA LPDS, FIG. 2-13, SEAL JOINTS.
5. ACCESS PANELS: SIZE AND LOCATION TO PERMIT SERVICING THE FUSIBLE LINK OR LINKS.
6. PROVIDE 1/4" TO 1/2" [6 TO 13mm] CLEARANCE ON HEIGHT AND WIDTH. FILL OPEN SPACE WITH ROCK WOOL FIRESTOP FIBER.
7. ALL DUCT WORK RISERS WHICH ARE RUN EXPOSED, SUCH AS THRU ATTIC FLOORS AND MECHANICAL ROOM FLOORS, SHALL BE PROVIDED WITH 3" [76mm] HIGH CONCRETE CURB AROUND OPENING FOR DUCT.

7 FIRE DAMPER INSTALLATION DETAIL

NTS

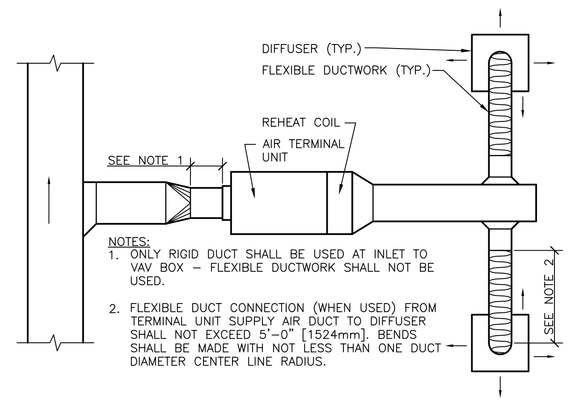

NOTES:
1. ONLY RIGID DUCT SHALL BE USED AT INLET TO VAV BOX – FLEXIBLE DUCTWORK SHALL NOT BE USED.
2. FLEXIBLE DUCT CONNECTION (WHEN USED) FROM TERMINAL UNIT SUPPLY AIR DUCT TO DIFFUSER SHALL NOT EXCEED 5'-0" [1524mm]. BENDS SHALL BE MADE WITH NOT LESS THAN ONE DUCT DIAMETER CENTER LINE RADIUS.

8 FLEXIBLE DUCT CONNECTION FOR AIR TERMINAL UNITS DETAIL

NTS

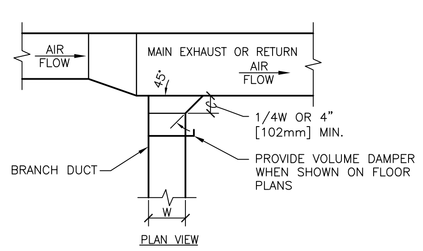

9 EXHAUST OR RETURN BRANCH DUCTWORK DETAIL

NTS

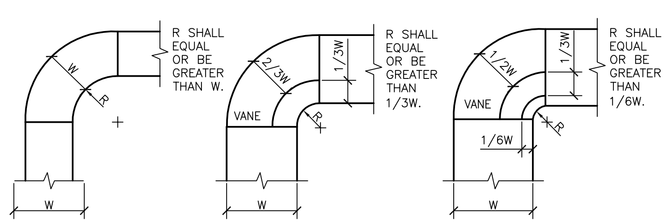

NOTES:
1. THE INTERIOR SURFACE OF ALL RADIUS ELBOWS SHALL BE MADE ROUND.
2. ALL STANDARD RADIUS ELBOWS SHOWN ON FLOOR PLANS MAY BE MADE SHORT RADIUS ELBOWS. ALL SHORT RADIUS ELBOWS SHALL HAVE VANES. VANES SHALL BE CONSTRUCTED, SUPPORTED AND FASTENED AS RECOMMENDED BY SMACNA.

10 DUCTWORK RADIUS ELBOWS DETAIL

NTS

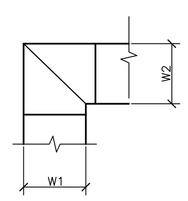

NOTES:
1. ALL VANED ELBOWS SHALL BE CONSTRUCTED AND INSTALLED AS DETAILED BY SMACNA.
2. WHEN W1 DOES NOT EQUAL W2, VANE SHALL BE SINGLE VANE TYPE REGARDLESS OF W DIMENSION.
3. ALL SINGLE VANES SHALL HAVE A 2" [50mm] RADIUS, 1 1/2" [40mm] MAXIMUM SPACE BETWEEN VANES AND A 3/4" [20mm] TRAILING EDGE.
4. WHEN W EQUALS W2 AND W1 IS GREATER THAN 20" [500mm] VANES SHALL BE DOUBLE VANE TYPE.

11 DUCTWORK SQUARE VANED ELBOWS DETAIL

NTS

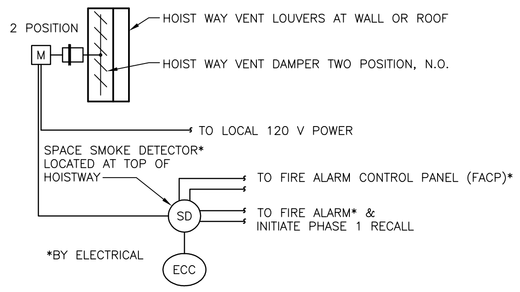

NOTES:
1. THE DAMPER SHALL REMAIN CLOSED DURING NORMAL OPERATION AND OPEN UPON LOSS OF POWER FROM A SIGNAL FROM THE SMOKE DETECTOR, LOCATED AT THE TOP OF THE HOISTWAY. PROVIDE ADEQUATE NUMBER OF CONTACTS FOR ELECTRICAL AND FIRE PROTECTION REQUIREMENTS.
2. SEE ARCHITECTURAL DRAWINGS FOR DAMPER LOCATIONS.
3. HOISTWAY VENT/DAMPER FOR ELEVATORS 1 AND 2 IS 72x12. LOCATION IS INDICATED ON DRAWING MH1-141.
4. HOISTWAY VENT/DAMPER FOR ELEVATORS 3 AND 4 IS 64x18. LOCATION IS INDICATED ON DRAWING MH1-141.
5. PROVIDE A BINARY DDC POINT TO SOUND AN ALARM AT ECC.
6. REMOTE ALARM SHALL BE ACTIVATED WHEN THE HOISTWAY SMOKE DETECTOR DETECTS SMOKE.

12 HOISTWAY VENT DAMPER (HVD) CONTROLS

NTS

FOR CONSTRUCTION
FULLY SPRINKLERED

Revisions:	Date

CONSULTANTS:

HDR Architecture, Inc.
1101 King Street | Suite 400 | Alexandria, Virginia 22314-2944 | 703.518.8500

ARCHITECT/ENGINEERS:

ARCHITECTURE ENGINEERING INTERIOR DESIGN DESIGN/BUILD
ASTORINO
227 Fort Pitt Boulevard Pittsburgh Pennsylvania 15222
TEL 412 765 1700 FAX 412 765 1711 www.astorino.com

Drawing Title	HVAC Sheetmetal Details
Approved: Project Director	
Project Title	VA CARES CONSOLIDATION VAMC, PITTSBURGH, PA RESEARCH OFFICE BLDG.
Project Number	646CA2500R
Building Number	30
Location	VAPHS UNIVERSITY DRIVE
Date	08-18-10
Checked	JS
Drawn	RAN
Drawing Number	MH7-101
Dwg. . of	

Office of Facilities Management
Department of Veterans Affairs

VA FORM 08-6231, OCT 1978

SINGLE DUCT AIR TERMINAL UNIT SCHEDULE

UNIT NO.	ROOMS SERVED	CFM [L/s]		TERMINAL UNIT INLET SIZE(NOTE 1) IN. [mm]	UNIT MAX. SP AT MAX. CFM (NOTE 2)	SOUND REQMT'S. @2" INLET PRESSURE				HOT WATER HEATING COIL						
		MAX.	MIN.			RAD NC	DISCH NC	ROOM NC	PERMITTED ROOM NC	ENT. AIR TEMP. °F[°C]	ENT. AIR TEMP. °F[°C]	ENT. WATER TEMP. °F[°C]	GPM [L/s]	MAX. PD FT (K Pa)	MIN HTG CFM [L/s]	MIN. MBH [KW]
TU-131	OFFICE 1A124	65 [31]	65 [31]	5ø [127]	0.03	<20	<20	<20	35	52 [11.1]	108.7 [42.6]	180 [82.2]	0.3 [0.02]	0.07 [0.21]	65 [31]	4.0 [1.2]
TU-132	OFFICE 1A135	65 [31]	65 [31]	5ø [127]	0.03	<20	<20	<20	35	52 [11.1]	108.7 [42.6]	180 [82.2]	0.3 [0.02]	0.07 [0.21]	65 [31]	4.0 [1.2]
TU-133	OFFICE 1A125	65 [31]	65 [31]	5ø [127]	0.03	<20	<20	<20	35	52 [11.1]	108.7 [42.6]	180 [82.2]	0.3 [0.02]	0.07 [0.21]	65 [31]	4.0 [1.2]
TU-134	OFFICE 1A136	65 [31]	65 [31]	5ø [127]	0.03	<20	<20	<20	35	52 [11.1]	108.7 [42.6]	180 [82.2]	0.3 [0.02]	0.07 [0.21]	65 [31]	4.0 [1.2]
TU-135	OFFICE 1A126	65 [31]	65 [31]	5ø [127]	0.03	<20	<20	<20	35	52 [11.1]	108.7 [42.6]	180 [82.2]	0.3 [0.02]	0.07 [0.21]	65 [31]	4.0 [1.2]
TU-136	OFFICE 1A137	65 [31]	65 [31]	5ø [127]	0.03	<20	<20	<20	35	52 [11.1]	108.7 [42.6]	180 [82.2]	0.3 [0.02]	0.07 [0.21]	65 [31]	4.0 [1.2]
TU-137	OFFICE 1A127	65 [31]	65 [31]	5ø [127]	0.03	<20	<20	<20	35	52 [11.1]	108.7 [42.6]	180 [82.2]	0.3 [0.02]	0.07 [0.21]	65 [31]	4.0 [1.2]
TU-138	OFFICE 1A138	65 [31]	65 [31]	5ø [127]	0.03	<20	<20	<20	35	52 [11.1]	108.7 [42.6]	180 [82.2]	0.3 [0.02]	0.07 [0.21]	65 [31]	4.0 [1.2]
TU-139	OFFICE 1A128	65 [31]	65 [31]	5ø [127]	0.03	<20	<20	<20	35	52 [11.1]	108.7 [42.6]	180 [82.2]	0.3 [0.02]	0.07 [0.21]	65 [31]	4.0 [1.2]
TU-140	OFFICE 1A139	65 [31]	65 [31]	5ø [127]	0.03	<20	<20	<20	35	52 [11.1]	108.7 [42.6]	180 [82.2]	0.3 [0.02]	0.07 [0.21]	65 [31]	4.0 [1.2]
TU-141	CORRIDORS C1002-C1005	1045 [492]	1045 [492]	14ø [356]	0.12	21	25	27	40	52 [11.1]	106.7 [41.5]	180 [82.2]	3.0 [0.20]	1.08 [3.24]	1045 [492]	62.0 [18.2]
TU-142	ELEV LOBBY 1A143	270 [127]	100 [47]	8ø [203]	0.05	<20	21	23	35	52 [11.1]	106.4 [41.3]	180 [82.2]	0.5 [0.03]	0.18 [0.54]	100 [47]	5.9 [1.7]
TU-201	STAFF LOUNGE 2A142	985 [463]	420 [197]	12ø [305]	0.12	<20	23	25	35	52 [11.1]	96.5 [35.8]	180 [82.2]	3.0 [0.19]	0.53 [1.09]	420 [197]	20.3 [6.0]
TU-202	OFFICE 2A141	180 [85]	140 [66]	6ø [152]	0.04	<20	22	23	35	52 [11.1]	103.4 [39.7]	180 [82.2]	2.0 [0.13]	1.92 [5.76]	140 [66]	7.8 [2.3]
TU-203	OFFICE 2A140	570 [268]	185 [87]	8ø [203]	0.15	21	26	28	35	52 [11.1]	101.3 [38.5]	180 [82.2]	2.0 [0.13]	2.06 [6.18]	185 [87]	9.9 [2.9]
TU-204	WORK AREA 2A122	770 [362]	480 [226]	14ø [356]	0.05	<20	24	26	40	52 [11.1]	99.4 [37.4]	180 [82.2]	2.5 [0.16]	0.45 [1.35]	480 [226]	24.7 [7.3]
TU-205	OPEN AREA 2A121	2100 [987]	650 [306]	24x16 [610x406]	0.08	27	28	29	35	52 [11.1]	106.6 [41.4]	180 [82.2]	3.0 [0.19]	2.36 [7.08]	650 [306]	38.5 [11.3]
TU-206	OPEN AREA 2A121	1300 [611]	260 [122]	14ø [356]	0.10	22	26	28	35	52 [11.1]	108.4 [42.4]	180 [82.2]	1.3 [0.08]	0.14 [0.42]	260 [122]	15.9 [4.7]
TU-207	INTERACTIVE 2A118	65 [31]	65 [31]	5ø [127]	0.03	<20	<20	<20	35	52 [11.1]	108.7 [42.6]	180 [82.2]	0.3 [0.02]	0.07 [0.21]	65 [31]	4.0 [1.2]
TU-208	OFFICE 2A119	80 [38]	80 [38]	5ø [127]	0.04	<20	<20	<20	35	52 [11.1]	106.1 [41.2]	180 [82.2]	0.4 [0.03]	0.11 [0.33]	80 [38]	4.7 [1.4]
TU-209	OFFICE 2A120	80 [38]	80 [38]	5ø [127]	0.04	<20	<20	<20	35	52 [11.1]	106.1 [41.2]	180 [82.2]	0.4 [0.03]	0.11 [0.33]	80 [38]	4.7 [1.4]
TU-210	WAITING 2A115	115 [55]	70 [33]	5ø [127]	0.06	<20	<20	<20	35	52 [11.1]	107.3 [41.8]	180 [82.2]	0.3 [0.02]	0.07 [0.21]	70 [33]	4.2 [1.2]
TU-211	INTERACTIVE 2A117	65 [31]	65 [31]	5ø [127]	0.03	<20	<20	<20	35	52 [11.1]	108.7 [42.6]	180 [82.2]	0.3 [0.02]	0.07 [0.21]	65 [31]	4.0 [1.2]
TU-212	CONFERENCE 2A107	1770 [832]	270 [127]	16ø [406]	0.12	23	25	27	35	52 [11.1]	106.9 [41.6]	180 [82.2]	0.9 [0.06]	0.08 [0.24]	270 [127]	16.1 [4.7]
TU-213	OFFICE 2A108	80 [38]	80 [38]	5ø [127]	0.04	<20	<20	<20	35	52 [11.1]	106.1 [41.2]	180 [82.2]	0.4 [0.03]	0.11 [0.33]	80 [38]	4.7 [1.4]
TU-214	INTERACTIVE 2A116	65 [31]	65 [31]	5ø [127]	0.03	<20	<20	<20	35	52 [11.1]	108.7 [42.6]	180 [82.2]	0.3 [0.02]	0.07 [0.21]	65 [31]	4.0 [1.2]
TU-215	CORRIDOR C2001	1095 [515]	170 [80]	12ø [305]	0.14	21	24	26	40	52 [11.1]	107.8 [42.1]	180 [82.2]	0.9 [0.06]	0.06 [0.18]	170 [80]	10.3 [3.0]
TU-216	OFFICE 2A106	80 [38]	80 [38]	5ø [127]	0.04	<20	<20	<20	35	52 [11.1]	106.1 [41.2]	180 [82.2]	0.4 [0.03]	0.11 [0.33]	80 [38]	4.7 [1.4]
TU-217	OFFICE 2A105	75 [36]	75 [36]	5ø [127]	0.04	<20	<20	<20	35	52 [11.1]	108.5 [42.5]	180 [82.2]	0.4 [0.03]	0.11 [0.33]	75 [35]	4.6 [1.4]
TU-218	OPEN AREA 2A100	3715 [1746]	650 [306]	24x16 [610x406]	0.19	34	33	35	35	52 [11.1]	105.2 [40.7]	180 [82.2]	2.5 [0.16]	1.70 [5.10]	650 [306]	37.5 [11.0]
TU-219	WORK AREA 2A101	1000 [48]	215 [101]	12ø [305]	0.12	<20	23	25	40	52 [11.1]	105.2 [40.7]	180 [82.2]	1.3 [0.08]	0.11 [0.33]	215 [101]	12.4 [3.6]
TU-220	TLT/JAN/CORR 2A103/2A104	340 [160]	340 [160]	9ø [229]	0.04	21	21	24	40	52 [11.1]	98.6 [37]	180 [82.2]	4.0 [0.25]	9.35 [28.10]	340 [160]	17.2 [5.1]
TU-221	OFFICE 2A110	80 [38]	80 [38]	5ø [127]	0.04	<20	<20	<20	35	52 [11.1]	106.1 [41.2]	180 [82.2]	0.4 [0.03]	0.11 0.33]	80 [38]	4.7 [1.4]
TU-222	OFFICE 2A129	80 [38]	80 [38]	5ø [127]	0.04	<20	<20	<20	35	52 [11.1]	106.1 [41.2]	180 [82.2]	0.4 [0.03]	0.11 [0.33]	80 [38]	4.7 [1.4]

SINGLE DUCT AIR TERMINAL UNIT SCHEDULE

UNIT NO.	ROOMS SERVED	CFM [L/s]		TERMINAL UNIT INLET SIZE(NOTE 1) IN. [mm]	UNIT MAX. SP AT MAX. CFM (NOTE 2)	SOUND REQMT'S. @2" INLET PRESSURE				HOT WATER HEATING COIL						
		MAX.	MIN.			RAD NC	DISCH NC	ROOM NC	PERMITTED ROOM NC	ENT. AIR TEMP. °F[°C]	LV. AIR TEMP. °F[°C]	ENT. WATER TEMP. °F[°C]	GPM [L/s]	MAX. PD FT (K Pa)	MIN HTG CFM [L/s]	MIN. MBH [KW]
TU-223	OFFICE 2A111	80 [38]	80 [38]	5ø [127]	0.04	<20	<20	<20	35	52 [11.1]	106.1 [41.2]	180 [82.2]	0.4 [0.03]	0.11 [0.33]	80 [38]	4.7 [1.4]
TU-224	OFFICE 2A130	80 [38]	80 [38]	5ø [127]	0.04	<20	<20	<20	35	52 [11.1]	106.1 [41.2]	180 [82.2]	0.4 [0.03]	0.11 [0.33]	80 [38]	4.7 [1.4]
TU-225	OFFICE 2A112	80 [38]	80 [38]	5ø [127]	0.04	<20	<20	<20	35	52 [11.1]	106.1 [41.2]	180 [82.2]	0.4 [0.03]	0.11 [0.33]	80 [38]	4.7 [1.4]
TU-226	OFFICE 2A131	80 [38]	80 [38]	5ø [127]	0.04	<20	<20	<20	35	52 [11.1]	106.1 [41.2]	180 [82.2]	0.4 [0.03]	0.11 [0.33]	80 [38]	4.7 [1.4]
TU-227	OFFICE 2A113	80 [38]	80 [38]	5ø [127]	0.04	<20	<20	<20	35	52 [11.1]	106.1 [41.2]	180 [82.2]	0.4 [0.03]	0.11 [0.33]	80 [38]	4.7 [1.4]
TU-228	OFFICE 2A132	80 [38]	80 [38]	5ø [127]	0.04	<20	<20	<20	35	52 [11.1]	106.1 [41.2]	180 [82.2]	0.4 [0.03]	0.11 [0.33]	80 [38]	4.7 [1.4]
TU-229	OFFICE 2A114	80 [38]	80 [38]	5ø [127]	0.04	<20	<20	<20	35	52 [11.1]	106.1 [41.2]	180 [82.2]	0.4 [0.03]	0.11 [0.33]	80 [38]	4.7 [1.4]
TU-230	OFFICE 2A133	80 [38]	80 [38]	5ø [127]	0.04	<20	<20	<20	35	52 [11.1]	106.1 [41.2]	180 [82.2]	0.4 [0.03]	0.11 [0.33]	80 [38]	4.7 [1.4]
TU-231	OFFICE 2A124	80 [38]	80 [38]	5ø [127]	0.04	<20	<20	<20	35	52 [11.1]	106.1 [41.2]	180 [82.2]	0.4 [0.03]	0.11 [0.33]	80 [38]	4.7 [1.4]
TU-232	OFFICE 2A135	80 [38]	80 [38]	5ø [127]	0.04	<20	<20	<20	35	52 [11.1]	106.1 [41.2]	180 [82.2]	0.4 [0.03]	0.11 [0.33]	80 [38]	4.7 [1.4]
TU-233	OFFICE 2A125	80 [38]	80 [38]	5ø [127]	0.04	<20	<20	<20	35	52 [11.1]	106.1 [41.2]	180 [82.2]	0.4 [0.03]	0.11 [0.33]	80 [38]	4.7 [1.4]
TU-234	OFFICE 2A136	80 [38]	80 [38]	5ø [127]	0.04	<20	<20	<20	35	52 [11.1]	106.1 [41.2]	180 [82.2]	0.4 [0.03]	0.11 [0.33]	80 [38]	4.7 [1.4]
TU-235	OFFICE 2A126	80 [38]	80 [38]	5ø [127]	0.04	<20	<20	<20	35	52 [11.1]	106.1 [41.2]	180 [82.2]	0.4 [0.03]	0.11 [0.33]	80 [38]	4.7 [1.4]
TU-236	OFFICE 2A137	80 [38]	80 [38]	5ø [127]	0.04	<20	<20	<20	35	52 [11.1]	106.1 [41.2]	180 [82.2]	0.4 [0.03]	0.11 [0.33]	80 [38]	4.7 [1.4]
TU-237	OFFICE 2A127	80 [38]	80 [38]	5ø [127]	0.04	<20	<20	<20	35	52 [11.1]	106.1 [41.2]	180 [82.2]	0.4 [0.03]	0.11 [0.33]	80 [38]	4.7 [1.4]
TU-238	OFFICE 2A138	80 [38]	80 [38]	5ø [127]	0.04	<20	<20	<20	35	52 [11.1]	106.1 [41.2]	180 [82.2]	0.4 [0.03]	0.11 [0.33]	80 [38]	4.7 [1.4]
TU-239	OFFICE 2A128	80 [38]	80 [38]	5ø [127]	0.04	<20	<20	<20	35	52 [11.1]	106.1 [41.2]	180 [82.2]	0.4 [0.03]	0.11 [0.33]	80 [38]	4.7 [1.4]
TU-240	OFFICE 2A139	80 [38]	80 [38]	5ø [127]	0.04	<20	<20	<20	35	52 [11.1]	106.1 [41.2]	180 [82.2]	0.4 [0.03]	0.11 [0.33]	80 [38]	4.7 [1.4]
TU-241A	CORRIDOR G2002-G2005	525 [247]	525 [247]	12ø [305]	0.12	<20	20	23	40	52 [11.1]	113.8 [45.4]	180 [82.2]	1.8 [0.11]	1.28 [3.84]	525 [247]	35.2 [10.3]
TU-241B	CORRIDOR G2002-G2005	525 [247]	525 [247]	12ø [305]	0.12	<20	20	23	40	52 [11.1]	113.8 [45.4]	180 [82.2]	1.8 [0.11]	1.28 [3.84]	525 [247]	35.2 [10.3]
TU-242	ELEV LOBBY 2A143	390 [184]	390 [184]	7ø [178]	0.14	25	25	28	35	52 [11.1]	108.5 [42.5]	180 [82.2]	2.0 [0.13]	1.14 [0.07]	390 [183]	23.9 [7.0]
TU-B01	ELEV LOBBY BA100	90 [42]	90 [42]	5ø [127]	0.05	<20	<20	<20	35	52 [11.1]	107.3 [41.8]	180 [82.2]	0.6 [0.04]	0.23 [0.02]	90 [42]	5.4 [1.6]
TU-R01	ELEV LOBBY RA143	280 [132]	280 [132]	8ø [203]	0.08	<20	21	23	35	52 [11.1]	108.3 [42.4]	180 [82.2]	0.9 [0.06]	0.25 [0.02]	280 [132]	17.1 [5.0]
TU-P01	PASSAGE 3A146	835 [392]	835 [392]	24x16 [609x406]	0.08	27	28	29	40	52 [11.1]	106.2 [41.2]	180 [82.2]	9.0 [0.57]	17.17 [1.08]	835 [392]	49.1 [14.4]
TU-P02	BRIDGE 3A146A	1925 [905]	1600 [752]	24x16 [609x406]	0.19	29	29	31	40	52 [11.1]	107.4 [41.9]	180 [82.2]	3.5 [0.22]	1.00 [0.06]	1600 [752]	96.2 [28.2]

NOTES:

1. THE SIZES OF THE DUCT RUNOOUTS TO THE UNITS SHOWN ON THE FLOORPLANS ARE THE MINIMUM ACCEPTABLE SIZES AND REQUIRE A DUCT TRANSITION AT UNITS WHERE THE UNIT INLET SIZE IS NOT THE SAME SIZE AS THE DUCT RUNOUT. DUCT RUNOUTS MAY BE UPSIZED FROM THAT SHOWN ON THE FLOORPLANS TO MATCH THE UNIT INLET SIZE IN ORDER TO ELIMINATE THIS TRANSITION.
2. THE UNIT MAXIMUM SP IS THE PRESSURE DIFFERENCE BETWEEN THE UNIT INLET AND DISCHARGE INCLUDING REHEAT COIL AND SOUND ATTENUATOR. IT IS ALSO THE MINIMUM PRESSURE REQUIRED AT THE UNIT INLET TO OBTAIN THE RATED CFM.
3. SELECTIONS BASED ON AN ELEVATION OF 1224 FT.
4. BOXES WITH RCP IN ZONE ARE CONTROL TYPE D; WITHOUT RCP ARE CONTROL TYP C. SEE DIAGRAMS 3 & 4 ON MH7-104.
5. SEE RUNOUT SCHEDULE FOR PIPE SIZE TO COIL.

FOR CONSTRUCTION
FULLY SPRINKLERED

Revisions:	Date

CONSULTANTS:

HDR Architecture, Inc.
1101 King Street | Suite 400 | Alexandria, Virginia 22314-2944 | 703.518.8500

ARCHITECT/ENGINEERS:

ARCHITECTURE ENGINEERING INTERIOR DESIGN DESIGN/BUILD
ASTORINO
227 Fort Pitt Boulevard Pittsburgh Pennsylvania 15222
TEL 412 765 1700 FAX 412 765 1711 www.astorino.com

Drawing Title: **HVAC Schedules**

Approved: Project Director

Project Title: **VA CARES CONSOLIDATION VAMC, PITTSBURGH, PA RESEARCH OFFICE BLDG.**

Location: **VAPHS UNIVERSITY DRIVE**

Date: **08-18-10** | Checked: **JS** | Drawn: **RAN**

Project Number: **646CA2500R**
Building Number: **30**
Drawing Number: **MH6-103**
Dwg. . of

Office of Facilities Management
Department of Veterans Affairs

VA FORM 08-6231, OCT 1978

AIR HANDLING UNIT SCHEDULE

UNIT NO.	LOCATION	AREA SERVED	SUPPLY FAN HP	RETURN FAN HP	CFM [L/S] SUPPLY	CFM [L/S] MIN O.A.	SUPPLY FAN DUTY EXTERNAL STATIC PRESSURE IN. [MM] (1)	SUPPLY FAN DUTY SPECIFIED INTERNAL LOSSES IN. [MM] (2)	SUPPLY FAN DUTY UNSPECIFIED INTERNAL LOSSES IN. [MM] (3)	SUPPLY FAN DUTY TOTAL S.P. IN. [MM] (4)	RETURN FAN DUTY EXTERNAL STATIC PRESSURE IN. [MM] (1)	RETURN FAN DUTY SPECIFIED INTERNAL LOSSES IN. [MM] (2)	RETURN FAN DUTY UNSPECIFIED INTERNAL LOSSES IN. [MM] (3)	RETURN FAN DUTY TOTAL S.P. IN. [MM] (4)	TYPE SYSTEM
30-AHU-1	MECH RM BA004	HEADERED SYSTEM	50	20	26090	2760	3.25	3.51	.51	7.27	1.25	.10	.47	1.82	VAV
30-AHU-2	MECH RM BA004	HEADERED SYSTEM	50	20	26090	2760	3.25	3.51	.51	7.27	1.25	.10	.47	1.82	VAV

NOTES:

(1) EXTERNAL STATIC PRESSURE REQUIRED AT DUCT CONNECTIONS TO INLET AND OUTLET OF AHU. MEASUREMENTS SHALL BE TAKEN WITHIN 3 FT. [1.0 M] OF INLET AND OUTLET AT A POINT OF MAXIMUM ACCURACY.

(2) TOTAL OF MAXIMUM PRESSURE DROPS OF COMPONENTS WHICH ARE SPECIFIED SEPARATELY, IE., PREFILTERS, AFTER FILTERS, HEATING AND COOLING COILS, DIFFUSER PLATE, AND SOUND ATTENUATORS.

(3) INTERNAL LOSS ALLOWANCE SHALL INCLUDE LOSSES DUE TO ENTRANCE AND EXIT OF AHU, MIXING BOXES, DIFFUSER SECTION [OTHER THAN DIFFUSER PLATE] INCLUDING LOSSES DUE TO FAILURE TO PROPERLY CONVERT FAN DISCHARGE VELOCITY PRESSURE TO STATIC PRESSURE, FAN INLET CONDITIONS, CASINGS, HUMIDIFIERS, DAMPERS, ETC.

(4) TOTAL FAN S.P. = EXTERNAL STATIC PRESSURE + SPECIFIED INTERNAL LOSSES + UNSPECIFIED INTERNAL LOSSES. MANUFACTURER SHALL PROVIDE SUBMITTAL SHOWING ACTUAL LOSSES OF ALL EQUIPMENT PROVIDED. REFER TO FAN SCHEDULE FOR ADDITIONAL FAN SELECTION INFORMATION

CHILLED WATER COOLING COIL SCHEDULE

COIL NO.	SYSTEM	CFM [l/s]	FACE VEL. FPM [m/s]	S.P. LOSS IN[mm]	ENT. AIR °F [°C] DB	ENT. AIR °F [°C] WB	LVG. AIR °F [°C] DB	LVG. AIR °F [°C] WB	CIRCULATING FLUID FLUID	GPM [l/s]	TEMP. IN °F [°C]	TEMP. OUT °F [°C]	LOSS FT. [M] FLUID	MBH [KW] TOTAL	MBH [KW] SENSIBLE
30-CC-1	30-AHU-1	26090 [12313]	396 [2.012]	.44 [11.18]	78.8 [26.0]	63.1 [17.3]	52.9 [11.6]	52.4 [11.3]	30% E.G.	105.3 [6.64]	44.0 [6.67]	60.0 [15.56]	7.6 [2.32]	777.5 [227.7]	697.1 [204.1]
30-CC-2	30-AHU-2	26090 [12313]	396 [2.012]	.44 [11.18]	78.8 [26.0]	63.1 [17.3]	52.9 [11.6]	52.4 [11.3]	30% E.G.	105.3 [6.64]	44.0 [6.67]	60.0 [15.56]	7.6 [2.32]	777.5 [227.7]	697.1 [204.1]

HOT WATER HEATING COIL SCHEDULE (1)

COIL NO.	SYSTEM	HTG CFM [l/s]	MAX CFM [l/s]	HTG FACE VEL. FPM [m/s]	MAX. FACE VEL. FPM [m/s]	MAX. S.P. LOSS IN[mm]	TEMP. AIR °F [°C] ENT. (2)	TEMP. AIR °F [°C] LVG. (2)	CIRCULATING FLUID (2) FLUID	GPM [l/s]	TEMP. IN °F [°C]	TEMP. OUT °F [°C]	MAX. LOSS FT. [M] FLUID	MIN. MBH [KW] (2)
30-HC-1	30-AHU-1	21260 [10034]	26090 [12313]	496 [2.52]	608 [3.09]	.12 [3.05]	35.0 [1.67]	52.02 [11.12]	WATER	64.0 [4.04]	180.0 [82.2]	165.5 [74.2]	.29 [0.088]	460.8 [134.9]
30-HC-2	30-AHU-2	21260 [10034]	26090 [12313]	496 [2.52]	608 [3.09]	.12 [3.05]	35.0 [1.67]	52.02 [11.12]	WATER	64.0 [4.04]	180.0 [82.2]	165.5 [74.2]	.29 [0.088]	460.8 [134.9]

NOTES:

(1) UTILIZES INTEGRAL FACE-AND-BYPASS DESIGN

(2) CONDITIONS BASED ON HEATING CFM.

ELECTRONIC STEAM HUMIDIFIER SCHEDULE

HUMID. NO.	SYSTEM	CFM [l/s]	MANIFOLD SPACING IN [MM]	ENT. AIR Db °F[°C]	ENT. AIR % RH	LVG. AIR Db °F[°C]	LVG. AIR % RH	STEAM PSIG [kPa]	REQUIRED CAPACITY LBS/HR [kg/s]	ACTUAL CAPACITY LBS/HR [kg/s]	ELECTRICAL MCA	ELECTRICAL MOCP	ELECTRICAL POWER	WEIGHT (LBS)
30-SH-1	30-AHU-1	21260 [10034]	9.0 [229]	63.2 [17.3]	36	63.2 [17.3]	44	5 [34]	110 [0.0139]	144 [0.0181]	58	80	480V-3ø-60Hz	507
30-SH-2	30-AHU-2	21260 [10034]	9.0 [229]	63.2 [17.3]	36	63.2 [17.3]	44	5 [34]	110 [0.0139]	144 [0.0181]	58	80	480V-3ø-60Hz	507

AIR COOLED CHILLER SCHEDULE

TAG	TYPE	NOMINAL CAPACITY (TONS)	EVAPORATOR DATA FLUID TYPE	EVAPORATOR DATA FLOW (GPM)	EVAPORATOR DATA EWT (°F)	EVAPORATOR DATA LWT (°F)	EVAPORATOR DATA WPD (FT H2O)	CONDENSER DATA EAT (°F) MIN	CONDENSER DATA EAT (°F) MAX	CONDENSER DATA FANS QTY	CONDENSER DATA FANS FLA (EA)	COMPRESSOR QTY	COMPRESSOR KW (EA)	COMPRESSOR REFRIG TYPE	ELECTRICAL MCA	ELECTRICAL MOCP	ELECTRICAL POWER	MAX SOUND LEVEL (dbA)	WEIGHT (LBS)
30-C-1	SCREW	179.7	30% EG	294.3	60.00	44.00	13.0	0	95	10	2.8	1 1	154 105	R134a	325	450	480V-3ø-60Hz	74	14006

AIR CONTROL EQUIPMENT SCHEDULE

EXPANSION TANK TAG	SERVICE	TYPE	VOLUME (GAL) TANK	VOLUME (GAL) ACCEPTANCE	PRESSURE (PSI) FILL	PRESSURE (PSI) MAX OPER	MAX WEIGHT (LBS)
30-ET-1	CHILLED WATER	HORIZONAL DIAPHRAGM	14	11.5	12	47.8	120
30-ET-2	HOT WATER	HORIZONAL DIAPHRAGM	90	34	45	72.8	970

AIR SEPARATOR TAG	SERVICE	TYPE	FLOW (GPM)	SIZE (IN)	VOLUME (GAL)	MAX WEIGHT (LBS)
30-AS-1	CHILLED WATER	INLINE TANGENTIAL	215	4	13	237
30-AS-2	HOT WATER	INLINE TANGENTIAL	525	6	34	530

SHELL & TUBE HEAT EXCHANGER SCHEDULE (STEAM TO WATER)

TAG	SERVICE	CAPACITY (MBH)	SHELL SIDE STEAM (LBS/HR)	SHELL SIDE PRESS (PSIG)	TUBE SIDE (BASED ON .75"OD AND .049" WALL TUBES QTY: 56) FLUID TYPE	FLOW (GPM)	EWT (°F)	LWT (°F)	WPD (FT H2O)	AREA (SQ FT)	PASSES	SIZE (IN)
HX-1	HEATING SYSTEM	3001	3170	15	WATER	265	157.7	180.0	2.04	93.3	2	12x48
HX-2	HEATING SYSTEM	3001	3170	15	WATER	265	157.7	180.0	2.04	93.3	2	12x48

HVAC PUMP SCHEDULE

PUMP NO.	LOCATION	SYSTEM	CIRCULATING FLUID FLUID	GPM [l/s]	PUMP HEAD FT [M] FLUID	TEMP. °F [°C]	SP. GR.	% EFF.	TYPE	MOTOR NOM. HP	MOTOR PHASE-VOLT	MOTOR RPM
30-CWP-1	2ND LEVEL	CHILLED WATER	30% E.G.	215 [13.56]	80 [24.38]	44-60 [7-16]	1.04	75	SINGLE SUCTION	10	3-480	1750
30-CWP-2	2ND LEVEL	CHILLED WATER	30% E.G.	215 [13.56]	80 [24.38]	44-60 [7-16]	1.04	75	SINGLE SUCTION	10	3-480	1750
30-HWP-1	BASEMENT	HOT WATER	WATER	525 [33.12]	145 [44.19]	180-160 [82-71]	1.0	76	SINGLE SUCTION	40	3-480	1750
30-HWP-2	BASEMENT	HOT WATER	WATER	525 [33.12]	145 [44.19]	180-160 [82-71]	1.0	76	SINGLE SUCTION	40	3-480	1750

FAN SCHEDULE

FAN NO.	LOCATION	CFM [L/S]	S.P. IN[mm]	FAN TYPE	DUTY / ARRANGEMENT	WHEEL/OPENING TYPE	WHEEL/OPENING MIN. DIA. IN[mm]	MAX. RPM	DRIVE	BHP (INCL. DRIVE LOSS)	FLA	MOTOR NOM. HP [W]	MOTOR PHASE-VOLT	CONTROL TYPE
30-SF-1	30-AHU-1	26090 [12313]	7.27 [184.7]	AF	SUPPLY AIR	II	32 [813]	1406	BELT	39.87	57.0	50 [37285]	3-480	VARIABLE
30-SF-2	30-AHU-2	26090 [12313]	7.27 [184.7]	AF	SUPPLY AIR	II	32 [813]	1406	BELT	39.87	57.0	50 [37285]	3-480	VARIABLE
30-RF-1	30-AHU-1	26090 [12313]	1.82 [46.23]	AF	RETURN AIR	S	36 [914]	746	BELT	12.08	23.5	15 [11186]	3-480	VARIABLE
30-RF-2	30-AHU-2	26090 [12313]	1.82 [46.23]	AF	RETURN AIR	S	36 [914]	746	BELT	12.08	23.5	15 [11186]	3-480	VARIABLE
30-EF-1	SECOND FLR CLG	4175 [1970]	0.5 [12.2]	INLINE	EXHAUST	BI	21 [533]	866	BELT	.872	1.8	1 [745]	3-480	CONSTANT

HOT WATER UNIT HEATER SCHEDULE

UNIT NO.	LOCATION	TYPE UNIT	CFM [l/s]	MIN. MBH [KW]	ENT. TEMP. °F [°C] AIR	ENT. TEMP. °F [°C] WATER	GPM [l/s]	MAX. P.D.	MOTOR HP [W]	MOTOR PHASE-VOLT
30-UH-1	OPEN AREA GA140	HORIZ.	1550 [729]	85 [25]	60 [15.6]	180 [82.2]	3.6 [.22]	1.3	.09 [67]	1-115
30-UH-2	OPEN AREA GA140	HORIZ.	1550 [729]	85 [25]	60 [15.6]	180 [82.2]	3.6 [.22]	1.3	.09 [67]	1-115
30-UH-3	OPEN AREA GA140	HORIZ.	1550 [729]	85 [25]	60 [15.6]	180 [82.2]	3.6 [.22]	1.3	.09 [67]	1-115
30-UH-4	OPEN AREA GA140	HORIZ.	1550 [729]	85 [25]	60 [15.6]	180 [82.2]	3.6 [.22]	1.3	.09 [67]	1-115
30-UH-5	OPEN AREA 1A144	HORIZ.	1550 [729]	85 [25]	60 [15.6]	180 [82.2]	3.6 [.22]	1.3	.09 [67]	1-115
30-UH-6	OPEN AREA 1A144	HORIZ.	1550 [729]	85 [25]	60 [15.6]	180 [82.2]	3.6 [.22]	1.3	.09 [67]	1-115
30-UH-7	OPEN AREA 1A144	HORIZ.	1550 [729]	85 [25]	60 [15.6]	180 [82.2]	3.6 [.22]	1.3	.09 [67]	1-115
30-UH-8	OPEN AREA 1A144	HORIZ.	1550 [729]	85 [25]	60 [15.6]	180 [82.2]	3.6 [.22]	1.3	.09 [67]	1-115
30-UH-9	PENTHOUSE 2A144	HORIZ.	1650 [776]	82 [24]	60 [15.6]	180 [82.2]	3.3 [.20]	0.95	.26 [194]	1-115
30-UH-10	PENTHOUSE 2A144	HORIZ.	1650 [776]	82 [24]	60 [15.6]	180 [82.2]	3.3 [.20]	0.95	.26 [194]	1-115
30-UH-11	PENTHOUSE 2A144	HORIZ.	1650 [776]	82 [24]	60 [15.6]	180 [82.2]	3.3 [.20]	0.95	.26 [194]	1-115
30-UH-12	FIRE PUMP RM BA005	HORIZ.	400 [189]	17 [5]	60 [15.6]	180 [82.2]	0.8 [.05]	0.11	.04 [30]	1-115

AIR FILTER SCHEDULE

FILTER NO.	CFM [l/s]	SYSTEM	VA GRADE	MERV	RATED EFF %	MAX. S.P. DROP INITIAL IN[mm]	MAX. S.P. DROP FINAL IN[mm]	HOUSING TYPE	CARTRIDGES NO.	CARTRIDGES SIZE IN[mm]	CARTRIDGES ARRANGEMENT
30-AF-1-D1 30-AF-1-D2	26090 [12313]	30-AHU-1	D	7	30	.22 [5.59]	1.2 [30.5]	SIDE SERVICE	12 4	20x20x4 [508x508x102] 20x24x4 [508x610x102]	3 HIGH x 4 WIDE 1 HIGH x 4 WIDE
30-AF-1-A1 30-AF-1-A2	26090 [12313]	30-AHU-1	A	14	90	.41 [10.4]	1.2 [30.5]	SIDE SERVICE	12 4	20x20x12 [508x508x305] 20x24x12 [508x610x305]	3 HIGH x 4 WIDE 1 HIGH x 4 WIDE
30-AF-2-D1 30-AF-2-D2	26090 [12313]	30-AHU-2	D	7	30	.22 [5.59]	1.2 [30.5]	SIDE SERVICE	12 4	20x20x4 [508x508x102] 20x24x4 [508x610x102]	3 HIGH x 4 WIDE 1 HIGH x 4 WIDE
30-AF-2-A1 30-AF-2-A2	26090 [12313]	30-AHU-2	A	14	90	.41 [10.4]	1.2 [30.5]	SIDE SERVICE	12 4	20x20x12 [508x508x305] 20x24x12 [508x610x305]	3 HIGH x 4 WIDE 1 HIGH x 4 WIDE
30-AF-MAU	3000 [1416]	30-MAU-1	D	7	30	.25 [6.35]	1.2 [30.5]	SIDE SERVICE	4	20x20x2 [508x508x51]	2 HIGH x 2 WIDE

STEAM CONDENSATE PUMP SCHEDULE

PUMP NO.	LOCATION	TYPE UNIT	GPM [l/s]	DISCHARGE PRESSURE PSI	MOTOR NOM. HP [W]	MOTOR PHASE-VOLT	RECEIVER SIZE CAPACITY GAL [l]	REMARKS
30-CP-1	MECH. RM.	DUPLEX	75 [4.7]	20	2 [1491]	3-480	50 [189]	3500 RPM MOTOR

HOT WATER CABINET UNIT HEATER SCHEDULE

UNIT NO.	LOCATION	TYPE UNIT	ARRANGEMENT	CFM [l/s]	MIN. MBH [KW]	ENT. TEMP. °F [°C] AIR	ENT. TEMP. °F [°C] WATER	GPM [l/s]	P.D.	MOTOR WATTS	MOTOR PHASE-VOLT
30-CUH-1	VESTIBULE GA100	INVERTED FLOW WALL MOUNTED	FRONT INLET FRONT OUTLET	540 [255]	37 [10.8]	70 [21.1]	180 [82.2]	2.5 [.157]	7.6	110	1-115
30-CUH-2	VESTIBULE GA1369A	INVERTED FLOW WALL MOUNTED	FRONT INLET FRONT OUTLET	540 [255]	37 [10.8]	70 [21.1]	180 [82.2]	2.5 [.157]	7.6	110	1-115
30-CUH-3	STAIR #1 GS001	INVERTED FLOW WALL MOUNTED	FRONT INLET FRONT OUTLET	350 [165]	23 [6.73]	70 [21.1]	180 [82.2]	1.6 [.101]	2.8	95	1-115
30-CUH-4	STAIR #2 GS002	INVERTED FLOW WALL MOUNTED	FRONT INLET FRONT OUTLET	350 [165]	23 [6.73]	70 [21.1]	180 [82.2]	1.6 [.101]	2.8	95	1-115
30-CUH-5	STAIR #1 2S001	INVERTED FLOW WALL MOUNTED	FRONT INLET FRONT OUTLET	350 [165]	23 [6.73]	70 [21.1]	180 [82.2]	1.6 [.101]	2.8	95	1-115
30-CUH-6	STAIR #2 2S002	INVERTED FLOW WALL MOUNTED	FRONT INLET FRONT OUTLET	350 [165]	23 [6.73]	70 [21.1]	180 [82.2]	1.6 [.101]	2.8	95	1-115

NOTES:

1. UNITS SHALL BE EQUIPPED WITH AT LEAST ONE LOWER SPEED FAN OPERATION MODE.
2. UNIT SELECTION SHALL BE BASED ON A HOT WATER TEMPERATURE DROP OF 20°F.

PIPE RUNOUT SCHEDULE

PIPE SIZE	GPM
3/4"	0 - 4.5
1"	> 4.5 - 8.5
1-1/4"	> 8.5 - 18
1-1/2"	> 18 - 26
2"	> 26 - 51
2-1/2"	> 51 - 80
3"	> 80 - 138
4"	> 138 - 238
6"	> 238 - 540
8"	> 540 - 936

MAKE-UP AIR UNIT SCHEDULE

MARK	TOTAL CFM	O.A. CFM	APD (IN)	HP	VOLTAGE	F.V. F.P.M.	E.A.T.	TEMP RISE	CAPACITY (MBH)	E.W.T.	L.W.T.	GPM	WPD (FT)	LOCATION
30-MAU-1	3000	2200	.35	2	480-3-60	483	20	65	210	180.0	158.6	20	2.66	BA004

ACCESSORIES:

1. INLET OF FAN/COIL/DRIVE ASSEMBLY SHALL BE FITTED WITH MIXING BOX AND FILTER BOX.

SPLIT SYSTEM A/C UNIT SCHEDULE (1) (2) (3) (4)

TAG	REFR.	CONDENSING UNITS MCA	MOCP	POWER	SOUND LEVEL (dBA)	WEIGHT (LBS)	EVAPORATORS TAG	LOCATION	TYPE	AIRFLOW CFM	COOLING BTU/H	COOLING KW	COOLING AMPS	HEATING BTU/H	HEATING KW	HEATING AMPS	MCA	MOCP	POWER
30-SSAC-C1	R410A	20	25	480-3ø-60Hz	60	574	30-SSAC-E1	GA120 ELECTRICAL	WALL MOUNTED	208	6,000	.03	.15	6,700	.03	.15	.19	15	208V-1ø-60Hz (6)
							30-SSAC-E2	1A123 ELECTRICAL	WALL MOUNTED	208	6,000	.03	.15	6,700	.03	.15	.19	15	208V-1ø-60Hz (6)
							30-SSAC-E3	2A123 ELECTRICAL	WALL MOUNTED	208	6,000	.03	.15	6,700	.03	.15	.19	15	208V-1ø-60Hz (6)
							30-SSAC-E4	GA131 TELECOM	WALL MOUNTED	406	12,000	.07	.34	13,500	.07	.34	.38	15	208V-1ø-60Hz (6)
							30-SSAC-E5	1A134 TELECOM	WALL MOUNTED	406	12,000	.07	.34	13,500	.07	.34	.38	15	208V-1ø-60Hz (6)
							30-SSAC-E6	2A134 TELECOM	WALL MOUNTED	406	12,000	.07	.34	13,500	.07	.34	.38	15	208V-1ø-60Hz (6)
							30-SSAC-E7	GA115 ELECTRICAL	WALL MOUNTED	208	6,000	.03	.15	6,700	.03	.15	.19	15	208V-1ø-60Hz (6)
							30-SSAC-E8	1A109 ELECTRICAL	WALL MOUNTED	208	6,000	.03	.15	6,700	.03	.15	.19	15	208V-1ø-60Hz (6)
							30-SSAC-E9	2A109 ELECTRICAL	WALL MOUNTED	208	8,000	.03	.15	9,000	.03	.15	.19	15	208V-1ø-60Hz (6)
							30-SSAC-E12A	NORTH ELEV MACH	WALL MOUNTED	636	18,000	.09	.44	20,000	.09	.44	.38	15	208V-1ø-60Hz
							30-SSAC-E12B		WALL MOUNTED	636	24,000	.09	.44	27,000	.09	.44	.37	15	208V-1ø-60Hz
30-SSAC-C2 (5)	R410A	16/11	20/15	480-3ø-60Hz	61	948	30-SSAC-E10	BA006 ELEV MACH	WALL MOUNTED	989	30,000	.12	.58	34,000	.12	.58	.54	15	208V-1ø-60Hz (6)
							30-SSAC-E11	BA007 TELECOM	WALL MOUNTED	406	12,000	.07	.34	13,500	.07	.34	.38	15	208V-1ø-60Hz (6)
							30-SSAC-E13	BA003 ELECTRICAL	WALL MOUNTED	406	15,000	.07	.34	17,000	.07	.34	.38	15	208V-1ø-60Hz
							30-SSAC-E14A	BA002 ELECTRICAL	WALL MOUNTED	989	30,000	.12	.58	34,000	.12	.58	.54	15	208V-1ø-60Hz
							30-SSAC-E14B		WALL MOUNTED	636	24,000	.09	.44	27,000	.09	.44	.37	15	208V-1ø-60Hz
							30-SSAC-E14C		WALL MOUNTED	636	24,000	.09	.44	27,000	.09	.44	.37	15	208V-1ø-60Hz

NOTES:

(1) SYSTEMS SHALL BE VARIABLE REFRIGERANT FLOW TYPE, CAPABLE OF PROVIDING SIMULTANEOUS HEATING AND COOLING TO THE EVAPORATORS.

(2) A CENTRALIZED CONTROLLER, LOCATED WHERE SHOWN ON PLAN, SHALL MONITOR THE UNITS, ENABLE SCHEDULING, AND PERFORM MAINTENANCE DIAGNOSTICS, AS DESCRIBED IN THE SPEC. POWER REQUIREMENT IS .4 AMP AT 208-1-60.

(3) EACH CONDENSING UNIT IS CONNECTED TO ITS ASSOCIATED EVAPORATORS THROUGH A BRANCH CONTROLLER LOCATED WHERE SHOWN ON PLAN. POWER REQUIREMENT IS 15 AMP MOCP AT 208-1-60.

(4) INCLUDE WINDSCREEN AND SNOW HOOD FOR LOW AMBIENT OPERATION.

(5) 30-SSAC-C2 IS COMPRISED OF 2 CONDENSING UNITS WITH SEPARATE CONNECTIONS AS SHOWN ON 2/MH7-105.

(6) PROVIDE WITH INTRAGAL CONDENSATE PUMP

DUCT LEAKAGE CLASSIFICATION AND ALLOWABLE LEAKAGE TABLE

DUCT PRESSURE CLASS, W.G. IN[mm]	SEAL CLASS	APPLICABLE SEALING	SMACNA LEAKAGE CLASS RECTANGULAR DUCT	SMACNA LEAKAGE CLASS ROUND DUCT
1/2", 1", 2" [13, 25, 51]	C	TRAVERSE JOINTS ONLY	24	12
3" [76]	B	TRAVERSE JOINTS AND SEAMS	12	6
4", 6" [102, 152]	A	JOINTS, SEAMS AND ALL WALL PENETRATIONS	6	3

DUCT PRESSURE CLASS TABLE

FAN NO.	DUCT INVOLVED	POSITIVE (P) OR NEGATIVE (N) PRESSURE	MINIMUM PRESSURE CLASS W.G. IN. [mm]
30-AHU-1 30-AHU-2	FROM OUTSIDE AIR LOUVER TO AIR HANDLING UNIT	N	3 [76]
	FROM AIR HANDLING UNIT TO TERMINAL BOXES	P	4 [102]
	FROM TERMINAL BOXES TO ROOM OUTLETS	P	3 [76]
30-RF-1 30-RF-2	FROM CEILING REGISTER TO RETURN FAN	N	3 [76]
	FROM RETURN FAN TO RELIEF LOUVER	P	3 [76]
30-EF-1	FROM EXHAUST REGISTERS/TERMINATIONS TO EXHAUST FAN	N	3 [76]
30-EF-1	FROM EXHAUST FAN TO EXHAUST LOUVER	N	3 [76]
30-MAU-1	FROM OA LOUVER TO MAU	N	3 [76]
	FROM MAU TO SUPPLY REGISTERS	P	3 [76]

HYDRONIC RADIANT CEILING PANEL SCHEDULE

PANEL SYMBOL	PANEL WIDTH IN[mm]	HEATING ACTIVE PANELS	HEATING CAPACITY/FOOT DOWN BTUH[W]	HEATING CAPACITY/FOOT TOTAL BTUH[W]	HEATING GPM [l/s]	REMARKS
30-RCP-A	24 [610]	(SEE PLAN)	413 [121]	- [-]	(SEE PLAN)	1,2,3

REMARKS:
1. DUTY BASED ON AVERAGE WATER TEMP OF 160° WITH AN AVERAGE UNHEATED SURFACE TEMP OF 70°F.
2. PANELS ARE TWO-PASS; SAME END CONNECTION, TUBE LENGTH=2x PANEL LENGTH.
3. AT 1 GPM, PRESSURE DROP IS 3.26FT/100FT OF TUBING (3.26FT/50FT OF PANEL).

FOR CONSTRUCTION
FULLY SPRINKLERED

Revisions: Date

CONSULTANTS:

HDR Architecture, Inc.
1101 King Street | Suite 400 | Alexandria, Virginia 22314-2944 | 703.518.8500

ARCHITECT/ENGINEERS:

ARCHITECTURE ENGINEERING INTERIOR DESIGN DESIGN/BUILD
ASTORINO
227 Fort Pitt Boulevard Pittsburgh Pennsylvania 15222
TEL 412 765 3700 FAX 412 765 3711 www.astorino.com

Drawing Title: **HVAC Schedules**
Approved: Project Director

Project Title: **VA CARES CONSOLIDATION VAMC, PITTSBURGH, PA RESEARCH OFFICE BLDG.**
Location: **VAPHS UNIVERSITY DRIVE**
Date: **08-18-10** Checked: **JS** Drawn: **RAN**

Project Number: **646CA2500R**
Building Number: **30**
Drawing Number: **MH6-101**
Dwg. . of

Office of Facilities Management
Department of Veterans Affairs

VA FORM 08-6231, OCT 1978

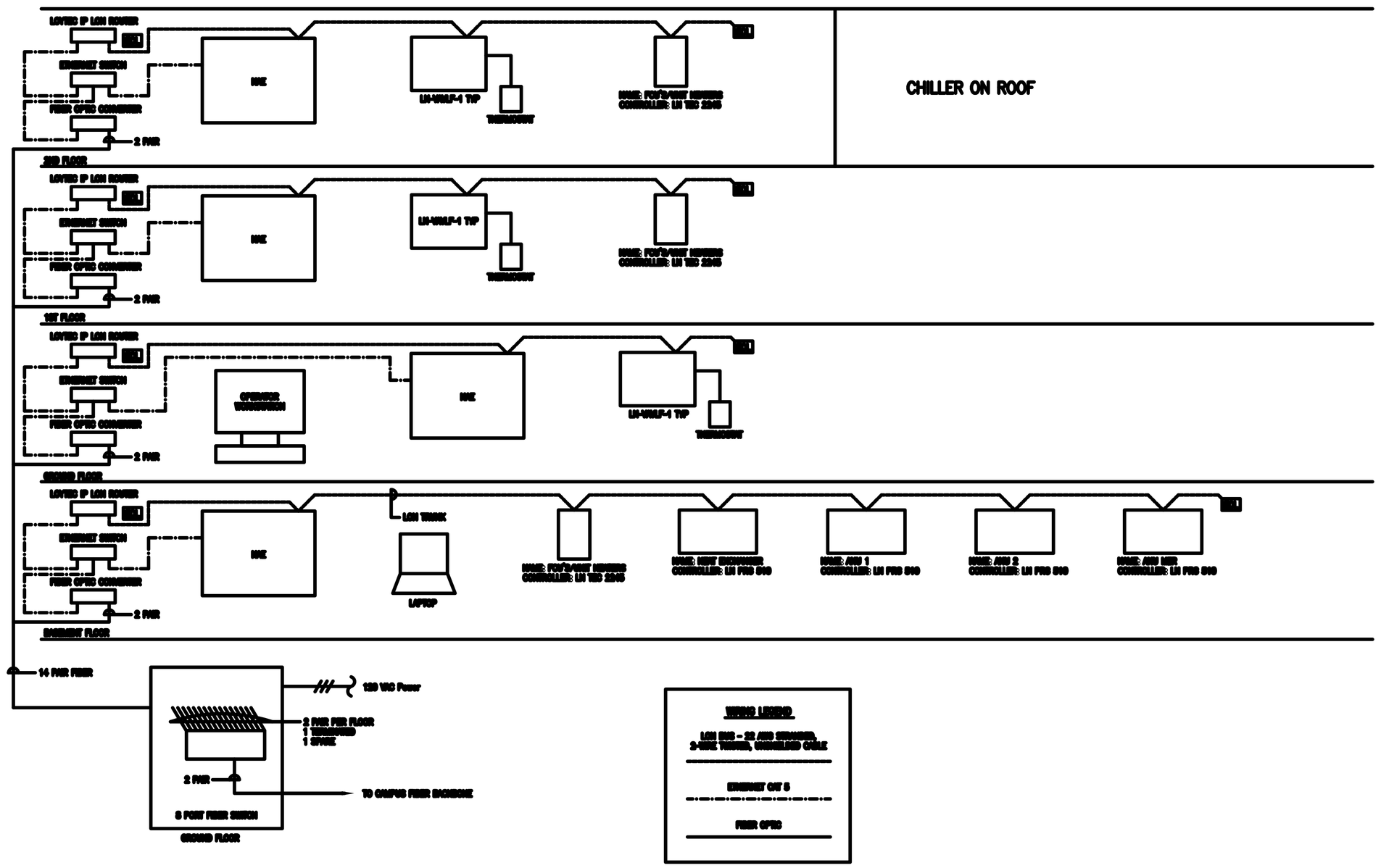

1 **CONTROL SYSTEM ARCHITECTURE DIAGRAM**

NTS

MAU-1 Points List				
Description	AI	AO	BI	BO
OA / RA Mixing Dampers Control		1		
Pre-Filter Differential Pressure	1			
Mixed Air Temp				
Bag Filter Differential Pressure	1			
Heating Coil Valve Control			1	
Low Limit Freezestat			1	
Supply Fan Start / Stop				1
Supply Fan Status			1	
Supply Duct Smoke Detector Status			1	
Supply Discharge Air Temp	1			
Return Air Temp	1			
Return Duct Smoke Detector Status			1	
Return Duct Smoke Damper Status			1	
MAU TOTAL	4	5	5	1

HW UNIT & CABINET HEATERS Points List				
Description	DO	AI	AO	
Fan	1			
Space Temperature		1		
Hot water Valve			1	
HW UNIT & CABINET HEATERS TOTAL	1	1	1	

VAV Boxes w/ Split A/C Units				
Description	AI	AO	BI	BO
Primary Air Damper Control		1		
Primary Airflow Sensor	1			
Return Air or Space Temp	1			
Hot Water Reheat Coil Valve		1		
A/C Unit Enable/Disable	1			1
A/C Unit Alarm			1	
VAV Boxes w/ Split A/C TOTAL	3	2	1	1

Description	DI	DO
EF-1 Points List		
Fan SS	1	1
Fan Status		
EF TOTAL	1	1

VAV Boxes Withoutt (Radiation)				
Description	AI	AO	BI	BO
Primary Air Damper Control		1		
Primary Airflow Sensor	1			
Return Air or Space Temp	1			
Hot Water Reheat Coil Valve		1		
Radiant Panel Heating Valve (Only on units with radiation)	1			(2)
Space Relative Humidity (For selected VAV boxes only)				
Space CO2 for selected rooms	1			
TOTAL	4	2	0	2

BUILDING HW TOTAL				
Description	AI	AO	BI	BO
BUILDING HW SYSTEM				
1st Floor Differential Pressure	1			
2nd Floor Differential Pressure	1			
Building HW Supply Temperature	1			
Building HW Return Temperature	1			
Hot Water Pumps			1	
Heat Exchanger Steam Valves			1	
BUILDING HW TOTAL	5	2	1	0

BUILDING CHW TOTAL				
Description	AI	AO	BI	BO
BUILDING CHW SYSTEM				
Building Differential Pressure	1			
Building CHW Supply Temperature	1			
Building CHW Return Temperature	1			
Building CHW Loop Flow	1			
Chiller			1	1
Chilled Water Pumps		1	1	1
BUILDING CHW TOTAL	3	1	2	2

VAV-AHU1 1-2 Points List						
Description	AI	AO	BI	BO		Interface Points
OA / RA Mixing Dampers Control		2				
SA Dampers Open/Close				2		
OA Dampers Open/Close				2		
Pre-Filter Differential Pressure	2					
Bag Filter Differential Pressure	2					
Heating Coil Valve Control		2				
Mixed Air Temp	2					
Hot Water Flow Meter	1					
Cooling Coil Valve Control		2				
Low Limit Freezestat			4			
Cooling Coil Discharge Air Temperature	2					
Chilled Water Flow Meter	1					
Supply Fan Start / Stop				2		
Supply Fan Status		2				
Supply Fan VFD Speed Control		2				
Supply Fan VFD Speed Feedback						2
Supply Fan VFD Motor Frequency Hertz						2
Supply Fan VFD Motor Speed RMP						2
Supply Fan VFD Motor Amps						2
Supply Fan VFD Motor KW						2
Supply Fan VFD Motor Runtime						2
Supply Fan VFD Fault						2
Supply Fan VFD Run Status						4
Supply Fan VFD in Bypass						2
Supply Fan Flow	2					
Supply Fan High Suction Pressure Alarm / Cutout						
Supply Duct Smoke Detector Status			4			
Switch			4			
Humidifier Isolation Valve					2	
Supply Discharge Air Temp	2					
Humidifier Steam Control Valve		2				
Supply Air Humidity	2					
Supply Air High Humidity Cut-Out				2		
Remote Supply Duct 2/3 Static Pressure	4					
Return Air Temp	4					
Return Air Temp (Common)	1					
Return Air Humidity	1					
Return Fan Start / Stop					2	
Return Fan Status			2			
Return Fan VFD Speed Control		2				
Return Fan VFD Speed Feedback						2
Return Fan VFD Motor Frequency Hertz						2
Return Fan VFD Motor Speed RMP						2
Return Fan VFD Motor Amps						2
Return Fan VFD Motor KW						2
Return Fan VFD Motor Runtime						2
Return Fan VFD Fault						2
Return Fan VFD Run Status						2
Return Fan VFD in Bypass						2
Return Fan Flow	4					
Return Fan High Suction Pressure Alarm / Cutout				2		
Switch			4			
Return Duct Smoke Detector Status					2	
Supply Air Humidity	2					
Return Air Humidity	2					
Return Air Pressure	2					
Return Air Damper Control		2				
2nd Floor Bldg. Static	2					
VAV-AHU1 TOTAL	36	14	24	10		40

Revisions:	Date

CONSULTANTS:

HDR Architecture, Inc.

1101 King Street | Suite 400 | Alexandria, Virginia 22314-2944 | 703.518.8500

ARCHITECT/ENGINEERS:

ARCHITECTURE ENGINEERING INTERIOR DESIGN DESIGN/BUILD ASTORINO

227 Fort Pitt Boulevard Pittsburgh Pennsylvania 15222
TEL 412.765.1700 FAX 412.765.1711 www.astorino.com

Approved: Project Director

Drawing Title: **HVAC Points List and Control System Architecture Diagram**

Project Title: **VA CARES CONSOLIDATION VAMC, PITTSBURGH, PA RESEARCH OFFICE BLDG.**

Location: **VAPHS UNIVERSITY DRIVE**

Date: **08-18-10** | Checked: **JS** | Drawn: **RAN**

Project Number: **646CA2500R**

Building Number: **30**

Drawing Number: **MH7-107**

Dwg. . of

Office of Facilities Management

Department of Veterans Affairs

FOR CONSTRUCTION
FULLY SPRINKLERED

VA FORM 08-6231, OCT 1978

SINGLE DUCT AIR TERMINAL UNIT SCHEDULE

UNIT NO.	ROOMS SERVED	CFM [L/s]		TERMINAL UNIT INLET SIZE(NOTE 1) IN. [mm]	UNIT MAX. SP AT MAX. CFM (NOTE 2)	SOUND REQMT'S. @2" INLET PRESSURE				HOT WATER HEATING COIL						
		MAX.	MIN.			RAD NC	DISCH NC	ROOM NC	PERMITTED ROOM NC	ENT. AIR TEMP. °F[°C]	LV. AIR TEMP. °F[°C]	ENT. WATER TEMP. °F[°C]	GPM [L/s]	MAX. PD FT [K Pa]	MIN HTG CFM [L/s]	MIN. MBH [KW]
TU-G01	STAFF LOUNGE GA139	935 [440]	170 [80]	12ø [305]	0.11	<20	22	25	35	52 [11.1]	107.8 [42.1]	180 [82.2]	0.9 [0.06]	0.06 [0.18]	170 [80]	10.3 [3.0]
TU-G02	OFFICE GA138	315 [149]	110 [52]	6ø [152]	0.10	<20	27	28	40	52 [11.1]	105.6 [40.9]	180 [82.2]	1.0 [0.06]	0.56 [1.68]	110 [52]	6.4 [1.9]
TU-G03	OFFICE GA137	545 [257]	100 [47]	8ø [203]	0.14	21	26	27	40	52 [11.1]	106.4 [41.3]	180 [82.2]	0.5 [0.03]	0.18 [0.54]	100 [47]	5.9 [1.7]
TU-G04	WORK AREA GA121A	745 [351]	745 [350]	12ø [305]	0.13	<20	20	23	40	52 [11.1]	108.0 [42.2]	180 [82.2]	2.5 [0.16]	2.35 [7.05]	745 [350]	45.3 [13.3]
TU-G05	OPEN AREA GA121	2025 [952]	350 [165]	16ø [406]	0.15	24	26	28	35	52 [11.1]	107.3 [41.8]	180 [82.2]	1.8 [0.11]	0.27 [0.81]	350 [165]	21.0 [6.2]
TU-G06	OPEN AREA GA121	1040 [489]	330 [155]	12ø [305]	0.13	20	23	26	35	52 [11.1]	100.0 [37.8]	180 [82.2]	2.3 [0.15]	0.33 [0.99]	330 [155]	17.2 [5.0]
TU-G07	WORK/CORR GA119/CG001	145 [69]	70 [33]	5ø [127]	0.09	<20	<20	<20	40	52 [11.1]	107.3 [41.8]	180 [82.2]	0.3 [0.02]	0.07 [0.21]	70 [33]	4.2 [1.2]
TU-G08	CLINICAL TRAIL GA118	1685 [792]	240 [113]	14ø [356]	0.15	23	27	29	35	52 [11.1]	106.5 [41.1]	180 [82.2]	0.9 [0.06]	0.07 [0.21]	240 [113]	14.2 [4.2]
TU-G09	EXAM RM GA110	395 [186]	85 [40]	6ø [152]	0.14	<20	30	30	35	52 [11.1]	107.3 [41.8]	180 [82.2]	0.5 [0.03]	0.16 [0.48]	85 [40]	5.1 [1.5]
TU-G10	EXAM RM GA109	395 [186]	85 [40]	6ø [152]	0.14	<20	30	30	35	52 [11.1]	107.3 [41.8]	180 [82.2]	0.5 [0.03]	0.16 [0.48]	85 [40]	5.1 [1.5]
TU-G11	EXAM RM GA108	405 [191]	110 [52]	6ø [152]	0.14	20	30	31	35	52 [11.1]	103.1 [39.5]	180 [82.2]	0.7 [0.04]	0.30 [0.90]	110 [52]	6.1 [1.8]
TU-G12	CG006 GA111,12,13	100 [48]	70 [33]	5ø [127]	0.05	<20	<20	<20	40	52 [11.1]	107.3 [41.8]	180 [82.2]	0.3 [0.02]	0.07 [0.21]	70 [33]	4.2 [1.2]
TU-G13	EXAM RM GA107	535 [251]	85 [40]	8ø [203]	0.13	21	25	27	35	52 [11.1]	105.1 [40.6]	180 [82.2]	0.3 [0.02]	0.07 [0.21]	85 [40]	4.9 [1.4]
TU-G14	WAITING AREA GA106	1425 [670]	235 [110]	14ø [356]	0.12	22	26	28	35	52 [11.1]	108.1 [42.3]	180 [82.2]	1.0 [0.06]	0.08 [0.24]	235 [110]	14.3 [4.2]
TU-G16	LOBBY/ELEV GA101/GA102	530 [250]	185 [87]	8ø [203]	0.13	21	25	27	35	52 [11.1]	99.3 [37.4]	180 [82.2]	1.3 [0.08]	0.96 [2.88]	185 [87]	9.5 [2.8]
TU-G17	TLT/JAN/CORR GA103,4,5	255 [120]	255 [120]	12ø [305]	0.02	<20	<20	<20	40	52 [11.1]	108.4 [42.4]	180 [82.2]	4.2 [0.26]	0.99 [2.97]	255 [120]	15.6 [4.6]
TU-G18	CONFERENCE GA116	610 [287]	215 [101]	9ø [229]	0.09	23	23	27	35	52 [11.1]	101.7 [38.7]	180 [82.2]	1.0 [0.06]	0.80 [2.40]	215 [101]	11.6 [3.4]
TU-G19	OFFICE GA117	65 [31]	65 [31]	5ø [127]	0.03	<20	<20	<20	35	52 [11.1]	108.7 [42.6]	180 [82.2]	0.3 [0.02]	0.07 [0.21]	65 [31]	4.0 [1.2]
TU-G20	OFFICE GA122	65 [31]	65 [31]	5ø [127]	0.03	<20	<20	<20	35	52 [11.1]	108.7 [42.6]	180 [82.2]	0.3 [0.02]	0.07 [0.21]	65 [31]	4.0 [1.2]
TU-G21	OFFICE GA129	65 [31]	65 [31]	5ø [127]	0.03	<20	<20	<20	35	52 [11.1]	108.7 [42.6]	180 [82.2]	0.3 [0.02]	0.07 [0.21]	65 [31]	4.0 [1.2]
TU-G22	OFFICE GA123	65 [31]	65 [31]	5ø [127]	0.03	<20	<20	<20	35	52 [11.1]	108.7 [42.6]	180 [82.2]	0.3 [0.02]	0.07 [0.21]	65 [31]	4.0 [1.2]
TU-G23	OFFICE GA130	65 [31]	65 [31]	5ø [127]	0.03	<20	<20	<20	35	52 [11.1]	108.7 [42.6]	180 [82.2]	0.3 [0.02]	0.07 [0.21]	65 [31]	4.0 [1.2]
TU-G24	OFFICE GA132	65 [31]	65 [31]	5ø [127]	0.03	<20	<20	<20	35	52 [11.1]	108.7 [42.6]	180 [82.2]	0.3 [0.02]	0.07 [0.21]	65 [31]	4.0 [1.2]
TU-G25	OFFICE GA124	65 [31]	65 [31]	5ø [127]	0.03	<20	<20	<20	35	52 [11.1]	108.7 [42.6]	180 [82.2]	0.3 [0.02]	0.07 [0.21]	65 [31]	4.0 [1.2]
TU-G26	OFFICE GA133	65 [31]	65 [31]	5ø [127]	0.03	<20	<20	<20	35	52 [11.1]	108.7 [42.6]	180 [82.2]	0.3 [0.02]	0.07 [0.21]	65 [31]	4.0 [1.2]
TU-G27	OFFICE GA125	65 [31]	65 [31]	5ø [127]	0.03	<20	<20	<20	35	52 [11.1]	108.7 [42.6]	180 [82.2]	0.3 [0.02]	0.07 [0.21]	65 [31]	4.0 [1.2]
TU-G28	OFFICE GA134	65 [31]	65 [31]	5ø [127]	0.03	<20	<20	<20	35	52 [11.1]	108.7 [42.6]	180 [82.2]	0.3 [0.02]	0.07 [0.21]	65 [31]	4.0 [1.2]
TU-G29	OFFICE GA126	65 [31]	65 [31]	5ø [127]	0.03	<20	<20	<20	35	52 [11.1]	108.7 [42.6]	180 [82.2]	0.3 [0.02]	0.07 [0.21]	65 [31]	4.0 [1.2]
TU-G30	OFFICE GA135	65 [31]	65 [31]	5ø [127]	0.03	<20	<20	<20	35	52 [11.1]	108.7 [42.6]	180 [82.2]	0.3 [0.02]	0.07 [0.21]	65 [31]	4.0 [1.2]
TU-G31	OFFICE GA127	65 [31]	65 [31]	5ø [127]	0.03	<20	<20	<20	35	52 [11.1]	108.7 [42.6]	180 [82.2]	0.3 [0.02]	0.07 [0.21]	65 [31]	4.0 [1.2]
TU-G32	OFFICE GA136	65 [31]	65 [31]	5ø [127]	0.03	<20	<20	<20	35	52 [11.1]	108.7 [42.6]	180 [82.2]	0.3 [0.02]	0.07 [0.21]	65 [31]	4.0 [1.2]
TU-G33	OFFICE GA128	65 [31]	65 [31]	5ø [127]	0.03	<20	<20	<20	35	52 [11.1]	108.7 [42.6]	180 [82.2]	0.3 [0.02]	0.07 [0.21]	65 [31]	4.0 [1.2]
TU-G34	CORR CG002-CG005	730 [344]	730 [344]	12ø [305]	0.13	<20	<20	23	40	52 [11.1]	107.0 [41.7]	180 [82.2]	2.2 [0.14]	1.86 [5.58]	730 [343]	43.6 [12.8]

SINGLE DUCT AIR TERMINAL UNIT SCHEDULE

UNIT NO.	ROOMS SERVED	CFM [L/s]		TERMINAL UNIT INLET SIZE(NOTE 1) IN. [mm]	UNIT MAX. SP AT MAX. CFM (NOTE 2)	SOUND REQMT'S. @2" INLET PRESSURE				HOT WATER HEATING COIL						
		MAX.	MIN.			RAD NC	DISCH NC	ROOM NC	PERMITTED ROOM NC	ENT. AIR TEMP. °F[°C]	LV. AIR TEMP. °F[°C]	ENT. WATER TEMP. °F[°C]	GPM [L/s]	MAX. PD FT (K Pa)	MIN HTG CFM [L/s]	MIN. MBH [KW]
TU-G35	ELEV LOBBY GA139	440 [207]	440 [207]	12ø [305]	0.04	<20	<20	<20	35	52 [11.1]	97.9 [36.6]	180 [82.2]	5.0 [0.32]	1.37 [4.11]	440 [207]	21.9 [6.4]
TU-101	STAFF LOUNGE 1A142	1080 [508]	240 [113]	14ø [356]	0.08	21	25	27	35	52 [11.1]	107.7 [42.1]	180 [82.2]	1.0 [0.06]	0.08 [0.24]	240 [113]	14.5 [4.3]
TU-102	OFFICE 1A141	385 [181]	100 [47]	6ø [152]	0.13	<20	29	30	35	52 [11.1]	108.2 [42.3]	180 [82.2]	1.1 [0.07]	0.67 [2.01]	100 [47]	6.1 [1.8]
TU-103	OFFICE 1A140	685 [322]	120 [56]	10ø [254]	0.11	21	25	27	35	52 [11.1]	107.3 [41.8]	180 [82.2]	0.4 [0.03]	0.16 [0.48]	120 [56]	7.2 [2.1]
TU-104	WORK AREA 1A122	705 [332]	200 [94]	10ø [254]	0.12	21	25	27	35	52 [11.1]	106.8 [41.6]	180 [82.2]	2.0 [0.13]	2.74 [8.22]	200 [94]	11.9 [3.5]
TU-105	OPEN AREA 1A121	2550 [1199]	530 [249]	24x16 [610x406]	0.11	29	29	31	35	52 [11.1]	108.2 [42.3]	180 [82.2]	2.0 [0.13]	1.14 [3.42]	530 [249]	32.3 [9.5]
TU-106	OPEN AREA 1A121	1040 [489]	230 [108]	12ø [305]	0.13	20	23	26	35	52 [11.1]	105.3 [40.7]	180 [82.2]	1.6 [0.01]	0.17 [0.51]	230 [108]	13.3 [3.9]
TU-107	INTERACTIVE 1A118	65 [31]	65 [31]	5ø [127]	0.03	<20	<20	<20	35	52 [11.1]	108.7 [42.6]	180 [82.2]	0.3 [0.02]	0.07 [0.21]	65 [31]	4.0 [1.2]
TU-108	OFFICE 1A119	65 [31]	65 [31]	5ø [127]	0.03	<20	<20	<20	35	52 [11.1]	108.7 [42.6]	180 [82.2]	0.3 [0.02]	0.07 [0.21]	65 [31]	4.0 [1.2]
TU-109	OFFICE 1A120	65 [31]	65 [31]	5ø [127]	0.03	<20	<20	<20	35	52 [11.1]	108.7 [42.6]	180 [82.2]	0.3 [0.02]	0.07 [0.21]	65 [31]	4.0 [1.2]
TU-110	WAITING AREA 1A115	100 [48]	70 [33]	5ø [127]	0.05	<20	<20	<20	35	52 [11.1]	107.3 [41.8]	180 [82.2]	0.3 [0.02]	0.07 [0.21]	70 [33]	4.2 [1.2]
TU-111	INTERACTIVE 1A117	65 [31]	65 [31]	5ø [127]	0.03	<20	<20	<20	35	52 [11.1]	108.7 [42.6]	180 [82.2]	0.3 [0.02]	0.07 [0.21]	65 [31]	4.0 [1.2]
TU-112	CONFERENCE 1A107	1745 [821]	300 [141]	16ø [406]	0.12	23	25	27	35	52 [11.1]	108.2 [42.3]	180 [82.2]	1.3 [0.09]	0.15 [0.45]	300 [141]	18.3 [5.4]
TU-113	OFFICE 1A108	65 [31]	65 [31]	5ø [127]	0.03	<20	<20	<20	35	52 [11.1]	108.7 [42.6]	180 [82.2]	0.3 [0.02]	0.07 [0.21]	65 [31]	4.0 [1.2]
TU-114	INTERACTIVE 1A116	65 [31]	65 [31]	5ø [127]	0.03	<20	<20	<20	35	52 [11.1]	108.7 [42.6]	180 [82.2]	0.3 [0.02]	0.07 [0.21]	65 [31]	4.0 [1.2]
TU-115	CORRIDOR C1001	1030 [485]	230 [108]	12ø [305]	0.13	20	23	25	40	52 [11.1]	106.5 [41.4]	180 [82.2]	1.9 [.12]	0.23 [0.69]	230 [108]	13.6 [4.0]
TU-116	OFFICE 1A106	65 [31]	65 [31]	5ø [127]	0.03	<20	<20	<20	35	52 [11.1]	108.7 [42.6]	180 [82.2]	0.3 [0.02]	0.07 [0.21]	65 [31]	4.0 [1.9]
TU-117	OFFICE 1A105	65 [31]	65 [31]	5ø [127]	0.03	<20	<20	<20	35	52 [11.1]	108.7 [42.6]	180 [82.2]	0.3 [0.02]	0.07 [0.21]	65 [31]	4.0 [1.9]
TU-118	OPEN AREA 1A100	3715 [1747]	650 [306]	24x16 [610x406]	0.19	34	33	35	35	52 [11.1]	105.2 [40.1]	180 [82.2]	2.5 [0.16]	1.70 [5.10]	650 [306]	37.5 [11.0]
TU-119	WORK AREA 1A101	815 [384]	185 [87]	10ø [254]	0.14	22	26	28	40	52 [11.1]	107.3 [41.8]	180 [82.2]	1.5 [0.09]	1.65 [4.95]	185 [87]	11.1 [3.3]
TU-120	TLT/JAN/CORR 1A103/1A104	240 [113]	240 [113]	7ø [178]	0.04	22	21	25	40	52 [11.1]	95.0 [35.0]	180 [82.2]	1.5 [0.09]	1.24 [3.72]	240 [113]	11.2 [3.3]
TU-121	OFFICE 1A110	65 [31]	65 [31]	5ø [127]	0.03	<20	<20	<20	35	52 [11.1]	108.7 [42.6]	180 [82.2]	0.3 [0.02]	0.07 [0.21]	65 [31]	4.0 [1.2]
TU-122	OFFICE 1A129	65 [31]	65 [31]	5ø [127]	0.03	<20	<20	<20	35	52 [11.1]	108.7 [42.6]	180 [82.2]	0.3 [0.02]	0.07 [0.21]	65 [31]	4.0 [1.2]
TU-123	OFFICE 1A111	65 [31]	65 [31]	5ø [127]	0.03	<20	<20	<20	35	52 [11.1]	108.7 [42.6]	180 [82.2]	0.3 [0.02]	0.07 [0.21]	65 [31]	4.0 [1.2]
TU-124	OFFICE 1A130	65 [31]	65 [31]	5ø [127]	0.03	<20	<20	<20	35	52 [11.1]	108.7 [42.6]	180 [82.2]	0.3 [0.02]	0.07 [0.21]	65 [31]	4.0 [1.2]
TU-125	OFFICE 1A112	65 [31]	65 [31]	5ø [127]	0.03	<20	<20	<20	35	52 [11.1]	108.7 [42.6]	180 [82.2]	0.3 [0.02]	0.07 [0.21]	65 [31]	4.0 [1.2]
TU-126	OFFICE 1A131	65 [31]	65 [31]	5ø [127]	0.03	<20	<20	<20	35	52 [11.1]	108.7 [42.6]	180 [82.2]	0.3 [0.02]	0.07 [0.21]	65 [31]	4.0 [1.2]
TU-127	OFFICE 1A113	65 [31]	65 [31]	5ø [127]	0.03	<20	<20	<20	35	52 [11.1]	108.7 [42.6]	180 [82.2]	0.3 [0.02]	0.07 [0.21]	65 [31]	4.0 [1.2]
TU-128	OFFICE 1A132	65 [31]	65 [31]	5ø [127]	0.03	<20	<20	<20	35	52 [11.1]	108.7 [42.6]	180 [82.2]	0.3 [0.02]	0.07 [0.21]	65 [31]	4.0 [1.2]
TU-129	OFFICE 1A114	65 [31]	65 [31]	5ø [127]	0.03	<20	<20	<20	35	52 [11.1]	108.7 [42.6]	180 [82.2]	0.3 [0.02]	0.07 [0.21]	65 [31]	4.0 [1.2]
TU-130	OFFICE 1A133	65 [31]	65 [31]	5ø [127]	0.03	<20	<20	<20	35	52 [11.1]	108.7 [42.6]	180 [82.2]	0.3 [0.02]	0.07 [0.21]	65 [31]	4.0 [1.2]

NOTES:

1. THE SIZES OF THE DUCT RUNOOUTS TO THE UNITS SHOWN ON THE FLOORPLANS ARE THE MINIMUM ACCEPTABLE SIZES AND REQUIRE A DUCT TRANSITION AT UNITS WHERE THE UNIT INLET SIZE IS NOT THE SAME SIZE AS THE DUCT RUNOUT. DUCT RUNOUTS MAY BE UPSIZED FROM THAT SHOWN ON THE FLOORPLANS TO MATCH THE UNIT INLET SIZE IN ORDER TO ELIMINATE THIS TRANSITION.
2. THE UNIT MAXIMUM SP IS THE PRESSURE DIFFERENCE BETWEEN THE UNIT INLET AND DISCHARGE INCLUDING REHEAT COIL AND SOUND ATTENUATOR. IT IS ALSO THE MINIMUM PRESSURE REQUIRED AT THE UNIT INLET TO OBTAIN THE RATED CFM.
3. SELECTIONS BASED ON AN ELEVATION OF 1224 FT.
4. BOXES WITH RCP IN ZONE ARE CONTROL TYPE D; WITHOUT RCP ARE CONTROL TYP C. SEE DIAGRAMS 3 & 4 ON MH7-104.
5. SEE RUNOUT SCHEDULE FOR PIPE SIZE TO COIL.

FOR CONSTRUCTION
FULLY SPRINKLERED

Revisions: | Date

CONSULTANTS:

HDR Architecture, Inc.
1101 King Street | Suite 400 | Alexandria, Virginia 22314-2944 | 703.518.8500

ARCHITECT/ENGINEERS:

ARCHITECTURE ENGINEERING INTERIOR DESIGN DESIGN/BUILD
ASTORINO
227 Fort Pitt Boulevard Pittsburgh Pennsylvania 15222
TEL 412 765 3700 FAX 412 765 1711 www.astorino.com

Drawing Title: **HVAC Schedules**
Approved: Project Director
Project Title: **VA CARES CONSOLIDATION VAMC, PITTSBURGH, PA RESEARCH OFFICE BLDG.**
Location: **VAPHS UNIVERSITY DRIVE**
Date: **08-18-10** | Checked: **JS** | Drawn: **RAN**
Project Number: **646CA2500R**
Building Number: **30**
Drawing Number: **MH6-102**
Dwg. . of

Office of Facilities Management
Department of Veterans Affairs

VA FORM 08-6231, OCT 1978

SINGLE DUCT AIR TERMINAL UNIT SCHEDULE

UNIT NO.	ROOMS SERVED	CFM [L/s]		TERMINAL UNIT INLET SIZE(NOTE 1) IN. [mm]	UNIT MAX. SP AT MAX. CFM (NOTE 2)	SOUND REQMT'S. @2" INLET PRESSURE				HOT WATER HEATING COIL						
		MAX.	MIN.			RAD NC	DISCH NC	ROOM NC	PERMITTED ROOM NC	ENT. AIR TEMP. °F[°C]	ENT. AIR TEMP. °F[°C]	ENT. WATER TEMP. °F[°C]	GPM [L/s]	MAX. PD FT (K Pa)	MIN HTG CFM [L/s]	MIN. MBH [KW]
TU-131	OFFICE 1A124	65 [31]	65 [31]	5ø [127]	0.03	<20	<20	<20	35	52 [11.1]	108.7 [42.6]	180 [82.2]	0.3 [0.02]	0.07 [0.21]	65 [31]	4.0 [1.2]
TU-132	OFFICE 1A135	65 [31]	65 [31]	5ø [127]	0.03	<20	<20	<20	35	52 [11.1]	108.7 [42.6]	180 [82.2]	0.3 [0.02]	0.07 [0.21]	65 [31]	4.0 [1.2]
TU-133	OFFICE 1A125	65 [31]	65 [31]	5ø [127]	0.03	<20	<20	<20	35	52 [11.1]	108.7 [42.6]	180 [82.2]	0.3 [0.02]	0.07 [0.21]	65 [31]	4.0 [1.2]
TU-134	OFFICE 1A136	65 [31]	65 [31]	5ø [127]	0.03	<20	<20	<20	35	52 [11.1]	108.7 [42.6]	180 [82.2]	0.3 [0.02]	0.07 [0.21]	65 [31]	4.0 [1.2]
TU-135	OFFICE 1A126	65 [31]	65 [31]	5ø [127]	0.03	<20	<20	<20	35	52 [11.1]	108.7 [42.6]	180 [82.2]	0.3 [0.02]	0.07 [0.21]	65 [31]	4.0 [1.2]
TU-136	OFFICE 1A137	65 [31]	65 [31]	5ø [127]	0.03	<20	<20	<20	35	52 [11.1]	108.7 [42.6]	180 [82.2]	0.3 [0.02]	0.07 [0.21]	65 [31]	4.0 [1.2]
TU-137	OFFICE 1A127	65 [31]	65 [31]	5ø [127]	0.03	<20	<20	<20	35	52 [11.1]	108.7 [42.6]	180 [82.2]	0.3 [0.02]	0.07 [0.21]	65 [31]	4.0 [1.2]
TU-138	OFFICE 1A138	65 [31]	65 [31]	5ø [127]	0.03	<20	<20	<20	35	52 [11.1]	108.7 [42.6]	180 [82.2]	0.3 [0.02]	0.07 [0.21]	65 [31]	4.0 [1.2]
TU-139	OFFICE 1A128	65 [31]	65 [31]	5ø [127]	0.03	<20	<20	<20	35	52 [11.1]	108.7 [42.6]	180 [82.2]	0.3 [0.02]	0.07 [0.21]	65 [31]	4.0 [1.2]
TU-140	OFFICE 1A139	65 [31]	65 [31]	5ø [127]	0.03	<20	<20	<20	35	52 [11.1]	108.7 [42.6]	180 [82.2]	0.3 [0.02]	0.07 [0.21]	65 [31]	4.0 [1.2]
TU-141	CORRIDORS C1002-C1005	1045 [492]	1045 [492]	14ø [356]	0.12	21	25	27	40	52 [11.1]	106.7 [41.5]	180 [82.2]	3.0 [0.20]	1.08 [3.24]	1045 [492]	62.0 [18.2]
TU-142	ELEV LOBBY 1A143	270 [127]	100 [47]	8ø [203]	0.05	<20	21	23	35	52 [11.1]	106.4 [41.3]	180 [82.2]	0.5 [0.03]	0.18 [0.54]	100 [47]	5.9 [1.7]
TU-201	STAFF LOUNGE 2A142	985 [463]	420 [197]	12ø [305]	0.12	<20	23	25	35	52 [11.1]	96.5 [35.8]	180 [82.2]	3.0 [0.19]	0.53 [1.09]	420 [197]	20.3 [6.0]
TU-202	OFFICE 2A141	180 [85]	140 [66]	6ø [152]	0.04	<20	22	23	35	52 [11.1]	103.4 [39.7]	180 [82.2]	2.0 [0.13]	1.92 [5.76]	140 [66]	7.8 [2.3]
TU-203	OFFICE 2A140	570 [268]	185 [87]	8ø [203]	0.15	21	26	28	35	52 [11.1]	101.3 [38.5]	180 [82.2]	2.0 [0.13]	2.06 [6.18]	185 [87]	9.9 [2.9]
TU-204	WORK AREA 2A122	770 [362]	480 [226]	14ø [356]	0.05	<20	24	26	40	52 [11.1]	99.4 [37.4]	180 [82.2]	2.5 [0.16]	0.45 [1.35]	480 [226]	24.7 [7.3]
TU-205	OPEN AREA 2A121	2100 [987]	650 [306]	24x16 [610x406]	0.08	27	28	29	35	52 [11.1]	106.6 [41.4]	180 [82.2]	3.0 [0.19]	2.36 [7.08]	650 [306]	38.5 [11.3]
TU-206	OPEN AREA 2A121	1300 [611]	260 [122]	14ø [356]	0.10	22	26	28	35	52 [11.1]	108.4 [42.4]	180 [82.2]	1.3 [0.08]	0.14 [0.42]	260 [122]	15.9 [4.7]
TU-207	INTERACTIVE 2A118	65 [31]	65 [31]	5ø [127]	0.03	<20	<20	<20	35	52 [11.1]	108.7 [42.6]	180 [82.2]	0.3 [0.02]	0.07 [0.21]	65 [31]	4.0 [1.2]
TU-208	OFFICE 2A119	80 [38]	80 [38]	5ø [127]	0.04	<20	<20	<20	35	52 [11.1]	106.1 [41.2]	180 [82.2]	0.4 [0.03]	0.11 [0.33]	80 [38]	4.7 [1.4]
TU-209	OFFICE 2A120	80 [38]	80 [38]	5ø [127]	0.04	<20	<20	<20	35	52 [11.1]	106.1 [41.2]	180 [82.2]	0.4 [0.03]	0.11 [0.33]	80 [38]	4.7 [1.4]
TU-210	WAITING 2A115	115 [55]	70 [33]	5ø [127]	0.06	<20	<20	<20	35	52 [11.1]	107.3 [41.8]	180 [82.2]	0.3 [0.02]	0.07 [0.21]	70 [33]	4.2 [1.2]
TU-211	INTERACTIVE 2A117	65 [31]	65 [31]	5ø [127]	0.03	<20	<20	<20	35	52 [11.1]	108.7 [42.6]	180 [82.2]	0.3 [0.02]	0.07 [0.21]	65 [31]	4.0 [1.2]
TU-212	CONFERENCE 2A107	1770 [832]	270 [127]	16ø [406]	0.12	23	25	27	35	52 [11.1]	106.9 [41.6]	180 [82.2]	0.9 [0.06]	0.08 [0.24]	270 [127]	16.1 [4.7]
TU-213	OFFICE 2A108	80 [38]	80 [38]	5ø [127]	0.04	<20	<20	<20	35	52 [11.1]	106.1 [41.2]	180 [82.2]	0.4 [0.03]	0.11 [0.33]	80 [38]	4.7 [1.4]
TU-214	INTERACTIVE 2A116	65 [31]	65 [31]	5ø [127]	0.03	<20	<20	<20	35	52 [11.1]	108.7 [42.6]	180 [82.2]	0.3 [0.02]	0.07 [0.21]	65 [31]	4.0 [1.2]
TU-215	CORRIDOR C2001	1095 [515]	170 [80]	12ø [305]	0.14	21	24	26	40	52 [11.1]	107.8 [42.1]	180 [82.2]	0.9 [0.06]	0.06 [0.18]	170 [80]	10.3 [3.0]
TU-216	OFFICE 2A106	80 [38]	80 [38]	5ø [127]	0.04	<20	<20	<20	35	52 [11.1]	106.1 [41.2]	180 [82.2]	0.4 [0.03]	0.11 [0.33]	80 [38]	4.7 [1.4]
TU-217	OFFICE 2A105	75 [36]	75 [36]	5ø [127]	0.04	<20	<20	<20	35	52 [11.1]	108.5 [42.5]	180 [82.2]	0.4 [0.03]	0.11 [0.33]	75 [35]	4.6 [1.4]
TU-218	OPEN AREA 2A100	3715 [1746]	650 [306]	24x16 [610x406]	0.19	34	33	35	35	52 [11.1]	105.2 [40.7]	180 [82.2]	2.5 [0.16]	1.70 [5.10]	650 [306]	37.5 [11.0]
TU-219	WORK AREA 2A101	1000 [48]	215 [101]	12ø [305]	0.12	<20	23	25	40	52 [11.1]	105.2 [40.7]	180 [82.2]	1.3 [0.08]	0.11 [0.33]	215 [101]	12.4 [3.6]
TU-220	TLT/JAN/CORR 2A103/2A104	340 [160]	340 [160]	9ø [229]	0.04	21	21	24	40	52 [11.1]	98.6 [37]	180 [82.2]	4.0 [0.25]	9.35 [28.10]	340 [160]	17.2 [5.1]
TU-221	OFFICE 2A110	80 [38]	80 [38]	5ø [127]	0.04	<20	<20	<20	35	52 [11.1]	106.1 [41.2]	180 [82.2]	0.4 [0.03]	0.11 0.33]	80 [38]	4.7 [1.4]
TU-222	OFFICE 2A129	80 [38]	80 [38]	5ø [127]	0.04	<20	<20	<20	35	52 [11.1]	106.1 [41.2]	180 [82.2]	0.4 [0.03]	0.11 [0.33]	80 [38]	4.7 [1.4]

SINGLE DUCT AIR TERMINAL UNIT SCHEDULE

UNIT NO.	ROOMS SERVED	CFM [L/s]		TERMINAL UNIT INLET SIZE(NOTE 1) IN. [mm]	UNIT MAX. SP AT MAX. CFM (NOTE 2)	SOUND REQMT'S. @2" INLET PRESSURE				HOT WATER HEATING COIL						
		MAX.	MIN.			RAD NC	DISCH NC	ROOM NC	PERMITTED ROOM NC	ENT. AIR TEMP. °F[°C]	LV. AIR TEMP. °F[°C]	ENT. WATER TEMP. °F[°C]	GPM [L/s]	MAX. PD FT (K Pa)	MIN HTG CFM [L/s]	MIN. MBH [KW]
TU-223	OFFICE 2A111	80 [38]	80 [38]	5ø [127]	0.04	<20	<20	<20	35	52 [11.1]	106.1 [41.2]	180 [82.2]	0.4 [0.03]	0.11 [0.33]	80 [38]	4.7 [1.4]
TU-224	OFFICE 2A130	80 [38]	80 [38]	5ø [127]	0.04	<20	<20	<20	35	52 [11.1]	106.1 [41.2]	180 [82.2]	0.4 [0.03]	0.11 [0.33]	80 [38]	4.7 [1.4]
TU-225	OFFICE 2A112	80 [38]	80 [38]	5ø [127]	0.04	<20	<20	<20	35	52 [11.1]	106.1 [41.2]	180 [82.2]	0.4 [0.03]	0.11 [0.33]	80 [38]	4.7 [1.4]
TU-226	OFFICE 2A131	80 [38]	80 [38]	5ø [127]	0.04	<20	<20	<20	35	52 [11.1]	106.1 [41.2]	180 [82.2]	0.4 [0.03]	0.11 [0.33]	80 [38]	4.7 [1.4]
TU-227	OFFICE 2A113	80 [38]	80 [38]	5ø [127]	0.04	<20	<20	<20	35	52 [11.1]	106.1 [41.2]	180 [82.2]	0.4 [0.03]	0.11 [0.33]	80 [38]	4.7 [1.4]
TU-228	OFFICE 2A132	80 [38]	80 [38]	5ø [127]	0.04	<20	<20	<20	35	52 [11.1]	106.1 [41.2]	180 [82.2]	0.4 [0.03]	0.11 [0.33]	80 [38]	4.7 [1.4]
TU-229	OFFICE 2A114	80 [38]	80 [38]	5ø [127]	0.04	<20	<20	<20	35	52 [11.1]	106.1 [41.2]	180 [82.2]	0.4 [0.03]	0.11 [0.33]	80 [38]	4.7 [1.4]
TU-230	OFFICE 2A133	80 [38]	80 [38]	5ø [127]	0.04	<20	<20	<20	35	52 [11.1]	106.1 [41.2]	180 [82.2]	0.4 [0.03]	0.11 [0.33]	80 [38]	4.7 [1.4]
TU-231	OFFICE 2A124	80 [38]	80 [38]	5ø [127]	0.04	<20	<20	<20	35	52 [11.1]	106.1 [41.2]	180 [82.2]	0.4 [0.03]	0.11 [0.33]	80 [38]	4.7 [1.4]
TU-232	OFFICE 2A135	80 [38]	80 [38]	5ø [127]	0.04	<20	<20	<20	35	52 [11.1]	106.1 [41.2]	180 [82.2]	0.4 [0.03]	0.11 [0.33]	80 [38]	4.7 [1.4]
TU-233	OFFICE 2A125	80 [38]	80 [38]	5ø [127]	0.04	<20	<20	<20	35	52 [11.1]	106.1 [41.2]	180 [82.2]	0.4 [0.03]	0.11 [0.33]	80 [38]	4.7 [1.4]
TU-234	OFFICE 2A136	80 [38]	80 [38]	5ø [127]	0.04	<20	<20	<20	35	52 [11.1]	106.1 [41.2]	180 [82.2]	0.4 [0.03]	0.11 [0.33]	80 [38]	4.7 [1.4]
TU-235	OFFICE 2A126	80 [38]	80 [38]	5ø [127]	0.04	<20	<20	<20	35	52 [11.1]	106.1 [41.2]	180 [82.2]	0.4 [0.03]	0.11 [0.33]	80 [38]	4.7 [1.4]
TU-236	OFFICE 2A137	80 [38]	80 [38]	5ø [127]	0.04	<20	<20	<20	35	52 [11.1]	106.1 [41.2]	180 [82.2]	0.4 [0.03]	0.11 [0.33]	80 [38]	4.7 [1.4]
TU-237	OFFICE 2A127	80 [38]	80 [38]	5ø [127]	0.04	<20	<20	<20	35	52 [11.1]	106.1 [41.2]	180 [82.2]	0.4 [0.03]	0.11 [0.33]	80 [38]	4.7 [1.4]
TU-238	OFFICE 2A138	80 [38]	80 [38]	5ø [127]	0.04	<20	<20	<20	35	52 [11.1]	106.1 [41.2]	180 [82.2]	0.4 [0.03]	0.11 [0.33]	80 [38]	4.7 [1.4]
TU-239	OFFICE 2A128	80 [38]	80 [38]	5ø [127]	0.04	<20	<20	<20	35	52 [11.1]	106.1 [41.2]	180 [82.2]	0.4 [0.03]	0.11 [0.33]	80 [38]	4.7 [1.4]
TU-240	OFFICE 2A139	80 [38]	80 [38]	5ø [127]	0.04	<20	<20	<20	35	52 [11.1]	106.1 [41.2]	180 [82.2]	0.4 [0.03]	0.11 [0.33]	80 [38]	4.7 [1.4]
TU-241A	CORRIDOR G2002-G2005	525 [247]	525 [247]	12ø [305]	0.12	<20	20	23	40	52 [11.1]	113.8 [45.4]	180 [82.2]	1.8 [0.11]	1.28 [3.84]	525 [247]	35.2 [10.3]
TU-241B	CORRIDOR G2002-G2005	525 [247]	525 [247]	12ø [305]	0.12	<20	20	23	40	52 [11.1]	113.8 [45.4]	180 [82.2]	1.8 [0.11]	1.28 [3.84]	525 [247]	35.2 [10.3]
TU-242	ELEV LOBBY 2A143	390 [184]	390 [184]	7ø [178]	0.14	25	25	28	35	52 [11.1]	108.5 [42.5]	180 [82.2]	2.0 [0.13]	1.14 [0.07]	390 [183]	23.9 [7.0]
TU-B01	ELEV LOBBY BA100	90 [42]	90 [42]	5ø [127]	0.05	<20	<20	<20	35	52 [11.1]	107.3 [41.8]	180 [82.2]	0.6 [0.04]	0.23 [0.02]	90 [42]	5.4 [1.6]
TU-R01	ELEV LOBBY RA143	280 [132]	280 [132]	8ø [203]	0.08	<20	21	23	35	52 [11.1]	108.3 [42.4]	180 [82.2]	0.9 [0.06]	0.25 [0.02]	280 [132]	17.1 [5.0]
TU-P01	PASSAGE 3A146	835 [392]	835 [392]	24x16 [609x406]	0.08	27	28	29	40	52 [11.1]	106.2 [41.2]	180 [82.2]	9.0 [0.57]	17.17 [1.08]	835 [392]	49.1 [14.4]
TU-P02	BRIDGE 3A146A	1925 [905]	1600 [752]	24x16 [609x406]	0.19	29	29	31	40	52 [11.1]	107.4 [41.9]	180 [82.2]	3.5 [0.22]	1.00 [0.06]	1600 [752]	96.2 [28.2]

NOTES:

1. THE SIZES OF THE DUCT RUNOOUTS TO THE UNITS SHOWN ON THE FLOORPLANS ARE THE MINIMUM ACCEPTABLE SIZES AND REQUIRE A DUCT TRANSITION AT UNITS WHERE THE UNIT INLET SIZE IS NOT THE SAME SIZE AS THE DUCT RUNOUT. DUCT RUNOUTS MAY BE UPSIZED FROM THAT SHOWN ON THE FLOORPLANS TO MATCH THE UNIT INLET SIZE IN ORDER TO ELIMINATE THIS TRANSITION.
2. THE UNIT MAXIMUM SP IS THE PRESSURE DIFFERENCE BETWEEN THE UNIT INLET AND DISCHARGE INCLUDING REHEAT COIL AND SOUND ATTENUATOR. IT IS ALSO THE MINIMUM PRESSURE REQUIRED AT THE UNIT INLET TO OBTAIN THE RATED CFM.
3. SELECTIONS BASED ON AN ELEVATION OF 1224 FT.
4. BOXES WITH RCP IN ZONE ARE CONTROL TYPE D; WITHOUT RCP ARE CONTROL TYP C. SEE DIAGRAMS 3 & 4 ON MH7-104.
5. SEE RUNOUT SCHEDULE FOR PIPE SIZE TO COIL.

FOR CONSTRUCTION
FULLY SPRINKLERED

Revisions:	Date

CONSULTANTS:

HDR Architecture, Inc.
1101 King Street | Suite 400 | Alexandria, Virginia 22314-2944 | 703.518.8500

ARCHITECT/ENGINEERS:

ARCHITECTURE ENGINEERING INTERIOR DESIGN DESIGN/BUILD
ASTORINO
227 Fort Pitt Boulevard Pittsburgh Pennsylvania 15222
TEL 412 765 1700 FAX 412 765 1711 www.astorino.com

Drawing Title: **HVAC Schedules**

Approved: Project Director

Project Title: **VA CARES CONSOLIDATION VAMC, PITTSBURGH, PA RESEARCH OFFICE BLDG.**

Location: **VAPHS UNIVERSITY DRIVE**

Date: **08-18-10** | Checked: **JS** | Drawn: **RAN**

Project Number: **646CA2500R**
Building Number: **30**
Drawing Number: **MH6-103**
Dwg. . of

Office of Facilities Management
Department of Veterans Affairs

VA FORM 08-6231, OCT 1978

1.1 Chilled Water Systems Chiller C-1, Chilled Water Pumps CWP-1,2

The chiller will have a BMS interface card to allow all the chiller parameters to be mapped back to the existing work station. The chilled water pumps shall be equipped with VFD drives. These drives shall also be equipped with communication cards to allow the points to be mapped back to the existing OWS. The lead chilled water pump will start whenever the outside air temperature is above 55 degrees and either one of the two AHU is energized. The speed of the pump shall vary from a water differential pressure transmitter to maintain a set differential. A pump lead-lag DDC system shall be provided for the new chilled water pumps.

Chilled Water Temperature & BTU monitoring:
The controller shall measure the building loop chilled water supply and return temperatures. In combination with the loop flow meter, a BTU value shall be calculated and historically trended for peak and minimum usage on a daily, weekly and monthly basis.

Alarms shall be provided as follows:

- High Chilled Water Supply Temperature: If the chilled water supply temperature is 5°F (adj.) greater than the designed value.
- Low Chilled Water Supply Temperature: If the chilled water supply temperature is 5°F (adj.) less than the designed value.
- Lead Pump Failure

1.2 Hot Water System

This new heat exchanger will provide hot water to the new reheat coils. These systems shall run continuously. (Reheat available year round). Steam shall be extended from the existing plant.

A new PRV system will be provided by the mechanical contractor to reduce the steam from medium pressure to low pressure. all miscellaneous control wiring for the condensate receiver tanks and pumps shall be provided.

The hot water will be maintained by modulating the steam 1/3 and 2/3 control valves in sequence to maintain 180 degree supply. Provide a hot water pump lead lag rotation to rotate the lead hot water pump once a month and automatically start the lag pump whenever the lead pump fails.

Provide water differential pressure sensors located on the 2th floor. These sensors shall, via the ASC, modulate the lead hot water pump speed to maintain its setting.

Hot Water Temperature & BTU monitoring:
Provide a steam measuring station to measure and document the amount of steam usage for this building

Alarms shall be provided as follows:

- High Hot Water Supply Temp: If greater than 200°F (adj.).
- Low Hot Water Supply Temp: If less than 100°F (adj.) when heating is enabled.
- Lead Pump Failure

1.3 Variable Air Volume AHU's 1&2

AHU's 1&2 operate in unison to provide heating, cooling and ventilation to the Research Building supply riser which serves VAV boxes. Each AHU contains isolation dampers on the outside, supply, return and exhaust ducts. These dampers serve to isolate one AHU from the other if in cases of maintenance or a loss of flow across a fan. Under normal operating conditions, these two AHU's will operate as a single AHU responding to the needs of the building.

When one of the four AHU's is off, its associated isolation dampers shall be closed. When the AHU is enabled for operation, the unit fan will ramp up to 50% of the current fan speed control signals and then the isolation dampers shall open (this is to prevent reverse rotation of the fan that is off). Once the isolation dampers are open, the fan speeds will track the other unit fan speeds in unison to maintain the necessary system static pressures and flows.

The AHU's outside air ducts run to the common outside air intake plenum. Each duct will have a motorized two position damper that shall open when the AHU's are operating.

Run Conditions - Requested:
The unit(s) shall run whenever:

- Any zone is occupied.
- OR a definable number of unoccupied zones need heating or cooling.

Freeze Protection:
The unit(s) shall shut down via a hard wired safety circuit and generate an alarm upon receiving a low limit alarm from switch. Provide one low temperature switch for each 10 foot of square feet.

High/Low Static Shutdown:
The unit(s) shall shut down via a hard wired safety circuit and generate an alarm upon receiving a high or low static shutdown signal from either the supply fan discharge cutout switch or the return fan inlet cutout switch.

Duct Smoke Detection:
The unit(s) shall shut down and close the supply, return and outside air dampers via a hard wired safety circuit and generate an alarm upon receiving a supply or return duct smoke detection alarm. There shall be supply duct smoke detectors(provided by the EC) and on the first and second floor for each of the main return shaft to the return shaft. Each AHU shall have an individual return duct smoke detector located near the unit.

AHU Optimal Start:
The unit(s) shall start prior to scheduled occupancy based on the time necessary for the zones to reach their occupied setpoints. The start time shall automatically adjust based on changes in outside air temperature and zone temperatures.

Supply Fan(s):
The supply fan(s) shall run anytime the unit is commanded to run, unless shutdown on safeties. To prevent short cycling, the supply fan(s) shall have a user definable (adj.) minimum runtime.

Alarms shall be provided as follows for each fan:

- Supply Fan Failure: Commanded on, but the status is off.
- Supply Fan in Hand: Commanded off, but the status is on.
- Supply Fan Runtime Exceeded: Status runtime exceeds a user definable limit (adj.).
- Low Temperature cutout tripped
- Smoke Detector tripped
- High or Low static tripped

Supply Air Duct Static Pressure Control:
The controller shall measure the second floor duct static pressure and modulate the supply fan variable frequency drives in unison to maintain a minimum duct static pressure setpoint for all static pressure sensing locations. The static pressure setpoint shall be reset based on zone cooling requirements.

- The initial duct static pressure setpoint shall be 1.5in H2O (adj.).
- As cooling demand increases, the setpoint shall incrementally reset up to a maximum of 1.8in H2O (adj.).
- As cooling demand decreases, the setpoint shall incrementally reset down to a minimum of 1.3 in H2O (adj.) .

Alarms shall be provided as follows:

- High Supply Air Static Pressure: If the supply air static pressure is 25% (adj.) greater than setpoint.
- Low Supply Air Static Pressure: If the supply air static pressure is 25% (adj.) less than setpoint.

A local supply fan discharge duct static pressure sensor will limit the discharge static pressure from the supply fan(s) from exceeding 3" w.c. (adj.)

Return Fan:
The return fan(s) shall run whenever the associated supply fan(s) runs.

Alarms shall be provided as follows for each fan:

- Return Fan Failure: Commanded on, but the status is off.
- Return Fan in Hand: Commanded off, but the status is on.
- Return Fan Runtime Exceeded: Status runtime exceeds a user definable limit (adj.).

Return Airflow:
The return fan variable frequency drive(s) shall modulate in unison to maintain a total system return air volume of the total supply air volume less the total outside air volume plus or 5% (adj.) to maintain a positive building static pressure (the volume offset to be confirmed during building commissioning).

RAtv = (SAtv - (OAtv+ (5% x OAtv)))
RAtv = Return Air Total Volume
SAtv = Supply Air Total Volume
OAtv = Outside Air Total Volume

Alarms shall be provided as follows:

- High Return Airflow: If the total return airflow is [an adjustable percentage] greater than setpoint.
- Low Return Airflow: If the total return airflow is [an adjustable percentage] less than setpoint.

Supply Air Temperature Setpoint - Optimized:
The controller shall monitor the supply air temperature and shall maintain a supply air temperature setpoint reset based on zone cooling and heating requirements

The supply air temperature setpoint shall be reset for cooling based on zone cooling requirements as follows:

- The initial supply air temperature setpoint shall be 55°F (adj.).
- As cooling demand increases, the setpoint shall incrementally reset down to a minimum of 53°F (adj.).
- As cooling demand decreases, the setpoint shall incrementally reset up to a maximum of 65°F (adj.).

Heating Coil Valve(s):
The controller shall measure the supply air temperature and modulate the heating coil valve(s) in conjunction with the face and bypass dampers to maintain the supply air temperature setpoint of 50 degrees.

Heating shall be enabled whenever:

- Outside air temperature is less than 60°F (adj.).
- AND the associated supply fan status is on.

The heating coil valve shall fully open for freeze protection whenever any of the following occurs:

- Mixed air temperature drops from 50°F to 45°F (adj.). The face and bypass dampers shall modulate to maintain the supply air temperature of 55 degrees with the heating coil valve full open.
- The low limit is on. Under this condition, the unit fans shall de-energize and an alarm shall be generated.
- Whenever the unit fans are shut down per normal time schedule, the face and bypass dampers shall modulate to maintain an interior plenum temperature of 55 degrees. If this temperature is exceeded even when the dampers are in the full bypass position (shielding the heating surfaces), the heating coil valve may then modulate to maintain the required interior plenum temperature.

Cooling Coil Valve(s):
The controller shall measure the supply air temperature and modulate the cooling coil valve(s) to maintain its cooling setpoint of 55 degrees.

Cooling shall be enabled whenever:

- Outside air temperature is greater than 50°F (adj.).
- AND the economizer is disabled or fully open.
- AND the associated supply fan status is on.
- AND the heating is not active.

The cooling coil valve shall open to 50% (adj.) whenever the low limit is on.

The cooling coil discharge air temperature sensor shall be monitored for high and low temperature conditions

Alarms shall be provided as follows:

- High Supply Air Temp: If the supply air temperature is 5°F (adj.) greater than setpoint.
- High Cooling Coil Discharge Air Temp: If the discharge air temperature is 5°F (adj.) greater than the supply air temperature setpoint.
- Low Cooling Coil Discharge Air Temp: If the discharge air temperature is 45°F (adj.) or less.

Low Supply Air Temperature Alarm:
The controller shall alarm if the supply air temperature is less than 45°F (adj.).

Humidifier Control:
When the controller is not calling for humidity, sensed by the return air and/or zone humidity sensors, the electronic steam humidifiers shall not provide steam to the units. When the controller is calling for humidity, the electronic steam humidifiers shall be enabled.

The controller shall measure the common return air humidity and monitor three (3) space humidity sensors connected to terminal unit controllers (one sensor associated to each of the floor in the building). These sensors shall be used to maintain the building humidity setpoint of 50% RH (adj.) by resetting the supply air humidity setpoint through a cascaded loop between 25% RH (adj.) and 75% RH (adj.).

A duct high humidity limit sensor in each AHU will close the steam control valve through a hard wired safety circuit if the duct humidity exceeds 85% RH.

The humidifier shall be enabled whenever:

- Return air humidity or other humidity sensor is below setpoint.
- AND the cooling is off.
- AND the associated supply fan status is on.

The supply air humidity sensor(s) shall be monitored for high humidity conditions when cooling is off as follows:

- High Supply Air Humidity: If the supply air humidity is greater than 80% RH (adj.).

If a High Supply Air Humidity alarm is generated, the controller shall disenable the electronic steam humidifiers.

Exhaust Duct Static Pressure Control:
The controller shall measure the exhaust duct static pressure and modulate the exhaust air damper(s) in unison to maintain the exhaust duct static pressure setpoint of 0.25in H2O (adj.). The exhaust air damper control shall be enabled when the supply fan status is proven. The exhaust air damper will close when the unit is off.

Alarms shall be provided as follows:

- High Exhaust Static Pressure: If the static pressure is 25% (adj.) greater than setpoint.
- Low Exhaust Static Pressure: If the building static pressure is 25% (adj.) less than setpoint.

Building Static Pressure:
The controller shall measure the building static pressure in each of the four common areas of the building on the second floor and monitor that the building is operating at a positive static pressure.

Alarms shall be provided as follows:

- High Building Static Pressure: If the building static pressure is 0.1" wc (adj.) or greater.
- Low Building Static Pressure: If the building static pressure is 0.0" wc (adj.) or less.

Economizer:
The controller shall measure the mixed air temperature and modulate the economizer dampers in sequence to maintain a setpoint 2°F (adj.) less than the supply air temperature setpoint. The outside air dampers shall maintain a minimum outside air flow as scheduled on the mechanical drawings whenever occupied. All AHU economizers shall operate in unison.

The economizer shall be enabled whenever:

- Outside air temperature is less than 65°F (adj.).
- AND the outside air enthalpy is less than 22Btu/lb (adj.)
- AND the outside air temperature is less than the return air temperature.
- AND the outside air enthalpy is less than the return air enthalpy.
- AND the supply fan status is on.

The economizer shall close whenever:

- Mixed air temperature drops from 40°F to 35°F (adj.)
- OR the low limit is on.
- OR on loss of supply fan status.

The outside and exhaust air dampers shall close and the return air damper shall open when the unit is off.

Prefilter Differential Pressure Monitor:
The controller shall monitor the differential pressure across the prefilter.

Alarms shall be provided as follows:

- Prefilter Change Required: Prefilter differential pressure exceeds a user definable limit (adj.).

Final Filter Differential Pressure Monitor:
The controller shall monitor the differential pressure across the final filter.

Alarms shall be provided as follows:

- Final Filter Change Required: Final filter differential pressure exceeds a user definable limit (adj.).

Mixed Air Temperature:
The controller shall monitor the mixed air temperature and use as required for economizer control or heating control .

Alarms shall be provided as follows:

- High Mixed Air Temp: If the mixed air temperature is greater than 90°F (adj.).
- Low Mixed Air Temp: If the mixed air temperature is less than 45°F (adj.).

Return Air Humidity:
The controller shall monitor the common return air humidity and use as required for economizer control or to reset the discharge air humidity setpoint control .

Alarms shall be provided as follows:

- High Return Air Humidity: If the return air humidity is greater than 70% (adj.).
- Low Return Air Humidity: If the return air humidity is less than 35% (adj.).

Return Air Temperature:
The controller shall monitor the return air temperature in each of the four main return air trunks as well as the common return air plenum and use as required for setpoint control or economizer control .

Alarms shall be provided as follows:

- High Return Air Temp: If the return air temperature is greater than 90°F (adj.).
- Low Return Air Temp: If the return air temperature is less than 45°F (adj.).

Supply Air Temperature:
The controller shall monitor the supply air temperature from each AHU as well as the common supply air plenum.

Alarms shall be provided as follows:

- High Supply Air Temp: If the supply air temperature is greater than 90°F (adj.).
- Low Supply Air Temp: If the supply air temperature is less than 45°F (adj.).

Water Flow Monitoring:
Both the heating coil and the cooling coil will have water flow sensors for monitoring purposes.

1.4 Make Up Air Unit-MAU-1 (MER)

This shall consist of outside air and return dampers, filters, hot water coil with integral face and bypass damper, constant volume supply fan. The unit is design to run fulltime to ventilate and heat the basement MER.

A unit will be provided with a combination starter disconnect provided by the mechanical contractor. Provide all miscellaneous control wiring for the starter and low temperature cutouts and duct smoke detectors shutdown circuit.

The unit fan shall run continuously, whenever the unit fan is energized the outside air damper will open to the minimum position to provide the scheduled flow of outside air. This setting shall be adjustable from the BAS work station.

Provide a discharge air transmitter to modulate the hot water valve in sequence with the outside air and return dampers to maintain a 70 degree discharge at all times. Upon a raising discharge temperature, the hot water valve shall modulate close while the outside air damper remains at a minimum position. On a continued raise in discharge temperature the outside air damper shall begin to modulate open while the return damper closes, at no time shall the discharge air fall below 70 degrees.

Provide a low temperature protection thermostat in the heating coil discharge to de-energize the unit fan and alarm at the OWS. Also the electrical contractor will furnish duct detectors it will be this contractor's responsibility to wire the fan shutdown circuit into the detectors and alarm at the OWS.

Freeze Protection:
The unit shall shut down via a hard wired safety circuit and generate an alarm upon receiving a low limit alarm from switch.

Duct Smoke Detection and Smoke Dampers:
The unit shall shut down and close the outside and return duct dampers via a hard wired safety circuit and generate an alarm upon receiving a supply or return duct smoke detection alarm. Detectors are by the EC.

Supply Fan:
The supply fan shall run anytime the unit is commanded to run, unless shutdown on safeties. To prevent short cycling, the supply fan shall have a user definable (adj.) minimum runtime.
Alarms shall be provided as follows:

- Supply Fan Failure: Commanded on, but the status is off.
- Supply Fan in Hand: Commanded off, but the status is on.
- Supply Fan Runtime Exceeded: Status runtime exceeds a user definable limit (adj.).

Prefilter Differential Pressure Monitor:
The controller shall monitor the differential pressure across the prefilter.

Alarms shall be provided as follows:

- Prefilter Change Required: Prefilter differential pressure exceeds a user definable limit (adj.).

Supply Air Temperature:
The controller shall monitor the supply air temperature.

Alarms shall be provided as follows:

- High Supply Air Temp: If the supply air temperature is greater than 100°F (adj.).
- Low Supply Air Temp: If the supply air temperature is less than 45°F (adj.).

1.5 Toilet Exhaust Fan EF-1

This fan shall serve the general restrooms. Provide a occupied unoccupied time schedule and an interlock to issue that if either AHU supply fan is on this fan is energized.

1.6 VAV - Terminal Unit - With Reheat/Radiation

Run Conditions - Scheduled:
The unit shall run according to a user definable time schedule in the following modes:

- Occupied Mode: The unit shall maintain
- A 74°F (adj.) cooling setpoint
- A 70°F (adj.) heating setpoint.
- Unoccupied Mode (night setback); The unit shall maintain
- A 85°F (adj.) cooling setpoint.
- A 55°F (adj.) heating setpoint.

Alarms shall be provided as follows:

- High Zone Temp: If the zone temperature is greater than the cooling setpoint by a user definable amount (adj.).
- Low Zone Temp: If the zone temperature is less than the heating setpoint by a user definable amount (adj.).

Zone Temperature Sensing and Control:
The zone temperature will be sensed by an area sensor or space thermostat (depending on the type of space), located in the the space served. Local adjustment and/or overrides shall be provided where thermostats are indicated. For areas controlled by sensors, all adjustments and overrides will be performed though the campus wide building automation system.

Zone Optimal Start:
The unit shall use an optimal start algorithm for morning start-up. This algorithm shall minimize the unoccupied warm-up or cool-down period while still achieving comfort conditions by the start of scheduled occupied period.

Zone Unoccupied Override:
A timed local override control shall allow an occupant to override the schedule and place the unit into an occupied mode for an adjustable period of time. At the expiration of this time, control of the unit shall automatically return to the schedule.

Variable Volume Terminal Unit - Flow Control:
The unit shall maintain zone setpoints by controlling the airflow through one of the following:

Occupied:

- When zone temperature is greater than its cooling setpoint, the zone damper shall modulate between the minimum occupied airflow (adj.) and the maximum cooling airflow (adj.) until the zone is satisfied.
- When the zone temperature is between the cooling setpoint and the heating setpoint, the zone damper shall maintain the minimum required zone ventilation (adj.).
- When zone temperature is less than its heating setpoint, the controller shall enable heating to maintain the zone temperature at its heating setpoint and the zone damper shall maintain the minimum required zone ventilation (adj.).

Unoccupied:

- When the zone is unoccupied the zone damper shall control to its minimum unoccupied airflow (adj.).
- When the zone temperature is greater than its cooling setpoint, the zone damper shall modulate between the minimum unoccupied airflow (adj.) and the maximum cooling airflow (adj.) until the zone is satisfied.
- When zone temperature is less than its heating setpoint, the controller shall enable heating to maintain the zone temperature at its heating setpoint and the zone damper shall maintain the minimum required zone ventilation (adj.).

Reheating Coil Valve:
The controller shall measure the zone temperature and modulate the reheating coil valve open on dropping temperature to maintain its heating setpoint.

Radiant Panel Heating Coil Valve: (Only on units with perimeter radiation)
In zones with radiant heat panels, these will operate when the outside air temperature is below 50°F (adj.). When a radiant panel is enabled, it will operate as the first stage of heat within a zone.

Discharge Air Temperature:
The controller shall monitor the discharge air temperature.

Alarms shall be provided as follows:

- High Discharge Air Temp: If the discharge air temperature is greater than 120°F (adj.).
- Low Discharge Air Temp: If the discharge air temperature is less than 40°F (adj.).

Space Humidity Monitoring:
Selected controllers shall have space humidity sensors connected to them for control of the humidification system. Refer to the AHU sequences for the arrangement and operation of the space humidity sensors.

Space CO2 Monitoring:
Provide a space IAQ sensor for selected conference rooms and rooms of high density occupancy. On a rising PPM reading in carbon dioxide, the respective box VAV minimum position shall be reset upwards to allow more supply air into the zone. The reheat coil shall remain in control of zone temperature. Upon a farther rise in carbon dioxide PPM, an alarm shall be sent to the BAS workstation.

1.7 VAV's with Split A/C units

Certain rooms are served with a VAV box and a Split A/C system. The VAV box is to operate as described previously when the associated AHU is on. The Split A/C system will operate via its self contained thermostat when the VAV box cannot maintain the space cooling setpoint or the associated AHU is off. It is this contractor's responsibility to provide all control wiring between the indoor and outdoor units.

1.8 Hot Water Unit Heater and Cabinet Heater Controls

A wall or unit mounted DDC thermostat (see plans) shall modulate the unit control valve and cycle the unit fan to maintain space temperature upon a decrease in space temperature. The valve shall modulate close and de-energize the fan upon the space temperature being satisfied. The operation shall be able to de-energize either the heating, fan or both if the Owner needs to.

1.9 Heat Trace Monitoring

Provide an enable-relay current switch to alarm the BAS workstation when any heat trace tape fails when enabled. Failure of heat trace tape shall be identifiable by location including plumbing piping in Basement areaway plenum, chilled water piping outside of building at chiller, and chiller components. . Heat trace tape shall be enabled by outside air temperature.

2.0 Sump Pump Alarm

Provide into the DDC BAS all alarm reporting capabilities of each elevator sump pump, such as pump failure or high water level.

2.1 Booster Pump

The booster pump controller panel will be provided with a communication interface via Lon or BACnet to the BAS system. The BAS shall be able to read run time, pump rpm, power/LEW/LEWH, KW, inlet and outlet pressures from this interface. All operating parameter settings and alarms shall be extended to the BAS system.

2.2 Electric Water Heaters

Provide a DDC strap-on sensor at the HW discharge leaving the tank. Provide all alarms, monitoring, and reporting capabilities to the DDC system. This sensor will alarm if the water temperature rises above 130 degrees F or falls below set point. The campus DDC system shall monitor HW temperature and provide means to control or disable the system from the main BAS work station.

2.3 Co-ordination

1. Provide and assist the air balance contractor with the balancing software to maintain the required airflows.
2. Provide factory or field mounting of the DDC controllers as required by the box manufacturer.
3. All 120 volt power and control wiring to atc panels, vav box actuators, combination f/s dampers and local ASC shall be by the EC.
4. All above points shall be mapped back to the existing OWS. Provide graphics for all new AHUs, pumps, split systems and exhaust fans.
5. All DDC wiring above accessible ceilings shall be run with open cable.

FOR CONSTRUCTION
FULLY SPRINKLERED

Revisions:	Date

CONSULTANTS:

HDR Architecture, Inc.
1101 King Street | Suite 400 | Alexandria, Virginia 22314-2944 | 703.518.8500

ARCHITECT/ENGINEERS:

ARCHITECTURE
ENGINEERING
INTERIOR DESIGN
DESIGN/BUILD
ASTORINO
227 Fort Pitt Boulevard Pittsburgh Pennsylvania 15222
TEL 412 765 3700 FAX 412 765 3711 www.astorino.com

Drawing Title	HVAC Sequence of Operations
Approved: Project Director	
Project Title	VA CARES CONSOLIDATION VAMC, PITTSBURGH, PA RESEARCH OFFICE BLDG.
Location	VAPHS UNIVERSITY DRIVE
Date	08-18-10
Checked	JS
Drawn	RAN
Project Number	646CA2500R
Building Number	30
Drawing Number	MH7-106
Dwg. . of	

Office of Facilities Management
Department of Veterans Affairs

VA FORM 08-6231, OCT 1978