Rewiring and Demolition

—— E ——	EXISTING CONDUIT IN PLACE – REMOVE EXISTING WIRES AND INSTALL NEW WIRES AS INDICATED
—— EX ——	EXISTING CONDUIT AND WIRE TO REMAIN
—— X ——	EXISTING CONDUIT AND WIRE TO BE ABANDONED OR REMOVED
o— E ——	CONNECTION OF NEW CONDUIT TO EXISTING CONDUIT W/APPROVED TYPE COUPLINGS – INSTALL NEW WIRES
—— ✕ ——	CONDUIT SEAL FOR EXPLOSION PROOF INSTALLATION
PR	PRESENT LIGHTING FIXTURE, SWITCH, DEVICE, ETC. TO REMAIN
PRN	PRESENT LIGHTING FIXTURE, SWITCH, DEVICE, ETC. TO REMOVED AND REPLACED WITH NEW.
PRR	PRESENT LIGHTING FIXTURE, SWITCH, DEVICE, SHOWN AT NEW LOCATION.
RPX	PRESENT LIGHTING FIXTURE, SWITCH, DEVICE, ETC. TO BE REMOVED..
RPC	REMOVE PRESENT FIXTURE, SWITCH, DEVICE, ETC. AND CAP OUTLET.
RPR	REMOVE PRESENT FIXTURE, SWITCH, DEVICE, ETC. ITEM TO BE REMOVED AND RELOCATED.

Site Work Symbols

—— P/S ——	POWER/SIGNAL DUCT
—— S ——	SIGNAL DUCT
—— P ——	POWER DUCT
—— EX P/S ——	EXISTING POWER/SIGNAL DUCT
—— EX S ——	EXISTING SIGNAL DUCT
—— EX P ——	EXISTING POWER DUCT
—— DB ——	DIRECT BURIAL CABLE – SIZE AS INDICATED.
	STREET LIGHT WITH SINGLE LUMINAIRE
	STREET LIGHT TWIN LUMINAIRE
	EXTERIOR FLOOD LIGHT
S SMH–X	SIGNAL MANHOLE X – INDICATES MANHOLE NUMBER
P EMH–X	ELECTRIC MANHOLE X – INDICATES MANHOLE NUMBER
S SHH–X	SIGNAL HANDHOLE X – INDICATES MANHOLE NUMBER
T500	PADMOUNT TRANSFORMER – NUMERAL INDICATES KVA SIZE
SWGR S	SWITCHGEAR – SUBSCRIPT DENOTES SUBSTATION
HVS	HIGH VOLTAGE SWITCH ON CONCRETE PAD
LVS	LOW VOLTAGE SWITCH ON CONCRETE PAD
SWBD	SWITCHBOARD
E	PRECAST POLYMER CONCRETE EXTERIOR PULLBOX QUAZITE #(2)PC0608BG06/P0608CG00"ELECTRIC"

Electrical Symbols

CLG.	WALL	
		DUPLEX RECEPTACLE
		DUPLEX RECEPTACLE MOUNTED 6" ABOVE COUNTER.
		DUPLEX RECEPTACLE ON EMERGENCY CIRCUIT – 20A, MTD 18" (460 MM) AFF WITH 1/4" (6.5 MM) "EMERGENCY" ENGRAVED LETTERS FILLED WITH RED ENAMEL. SUBSCRIPT "P" INDICATES RECEPTACLE WITH INTERNAL NEON LIGHT.
		COMBINATION SWITCH & DUPLEX RECEPTACLE (4'–6" (1400 MM) AFF UNLESS OTHERWISE NOTED).
	J	DROP CORD, SINGLE CONVENIENCE OUTLET, 3–WIRE, GROUNDING TYPE, 20A, W/#12 CONDUCTORS IN FLEXIBLE CORD (CENTER LINE OF OUTLET: 6'–6" (2000 MM) AFF–MINIMUM).
	P	FIRE RATED POKE THROUGH FLOOR BOX WITH DUPLEX RECEPTACLE (HUBBELL #PT7FSDBRS2A)
		FLOOR BOX WITH DUPLEX RECEPTACLE.
		SINGLE RECEPTACLE – 20A, MTD 18" (460 MM) AFF UNLESS OTHERWISE NOTED.
	GFI	DUPLEX RECEPTACLE (HOSPITAL GRADE) – 20A, MTD. 18" (460 MM) AFF. SUBSCRIPT "GFI" INDICATES GROUND FAULT TYPE: "N" INDICATES NOT HOSPITAL GRADE: "ST" INDICATES (15A) SAFETY TYPE: AND "I" INDICATES ISOLATED GROUND (IF USED).
		DUPLEX RECEPTACLE SWITCHED 18" (460 MM) AFF UNLESS OTHERWISE NOTED.
	FATP	FIRE ALARM TRANSPONDER PANEL
	P/D	RAISED FLOOR POWER/DATA FLOOR BOX (SEE SPECIFICATION SECTION). PROVIDE 2–20AMP DUPLEX RECEPTACLES AND 1" EMT CONDUIT STUB WITH (4) FOUR CATEGORY 6 UTP CABLES FROM FLOOR SERVING TELECOM ROOM. ROUGHT CABLES UNDER FLOOR AS INDICATED ON DRAWINGS.. REFER TO TELECOMMUNICATION DRAWINGS FOR COMMUNICATION OUTLET REQUIREMENTS.
	DM	POWER DISTRIBUTION MODULE
		QUADRUPLEX RECEPTACLE
		ELECTRICAL STRIP MOLD (OUTLETS ON 2'–0" (610 MM) CENTERS OR AS DESIGNATED ON DRAWINGS), MTD 3'–6" (1100 MM) AFF OR AS INDICATED.
		SPECIAL RECEPTACLE NEMA CONFIGURATION AS INDICATED
	G	GROUND JACK
		TWO–PEICE STEEL MULTIPLE CHANNEL SURFACE RACEWAY WITH DIVIDER, PROVIDE ALL ASSOCIATED RACEWAYS, FITTING AND ACCESSORIES AS REQUIRED, FURNISH AND INSTALL RECEPTACLES AND COMMUNICATION OUTLETS AS INDICATED ON FLOOR PLANS. WIREMOLD V 4000 SERIES.
	XXXXXXXXXX	TWO–PEICE STEEL MULTIPLE CHANNEL SURFACE RACEWAY, PROVIDE ALL ASSOCIATED RACEWAYS, FITTING AND ACCESSORIES AS REQUIRED, FURNISH AND INSTALL RECEPTACLES AND COMMUNICATION OUTLETS AS INDICATED ON FLOOR PLANS. WIREMOLD V 4000 SERIES.

General Notes

1. THE ELECTRICAL POWER DISTRIBUTION SYSTEM WILL PROVIDE A VOLTAGE DROP NOT TO EXCEED 5% BETWEEN THE MAIN TRANSFORMER SECONDARY AND THE EQUIPMENT TO BE SERVED.
2. THE LIGHTING AND POWER SYSTEM WIRING SHALL BE SIZED IN ORDER TO LIMIT THE VOLTAGE DROP TO 3% FROM THE LAST FIXTURE/DEVICE IN ANY CIRCUIT TO THE PANELBOARD.
3. FOR TEMPORARY POWER AND LIGHTING REQUIREMENTS BY THE ELECTRICAL CONTRACTOR REFER TO FRONT END SPECIFICATIONS.
4. LIGHT FIXTURES SHALL HAVE COLOR BY ARCHITECT.
5. LIGHTING SHALL BE MOUNTED UTILIZING METHODS OF ATTACHMENT IN ACCORDANCE WITH NEC, ARTICLE 410–16 AND UL REQUIREMENTS. CONTRACTOR IS RESPONSIBLE TO COORDINATE FIXTURE INSTALLATION HARDWARE WITH CEILING TYPE.
6. INSTALL ALL POKE THRU'S PER SPECIFICATIONS, MANUFACTURER'S REQUIREMENTS, AND NATIONAL ELECTRIC CODE. ALL POKE THRU DEVICES SHALL BE INSTALLED AS A MINIMUM SPACING OF 2' ON CENTER AND NO MORE THAN ONE DEVICE PER EACH 65 SQUARE FEET OF FLOOR AREA IN EACH SPAN.
7. ALL EMPTY CONDUITS (ELECTRICAL, TELEPHONE, DATA, TV, ETC.) SHALL HAVE A CONDUIT MEASURING TAPE INSTALLED WITHIN THEM. THE TAPE SHALL BE SUITABLE FOR USE AS A PULLING LINE. TAPE SHALL BE RATED 130 LB. TENSILE STRENGTH (GREENLEE 435 OR EQUAL) SIZES 2 INCHES OR LARGER SHALL BE SUPPLEMENTED WITH 200 LB. NYLON LINE, TIED AT BOTH ENDS TO TAPE.
8. ALL PULL LINES SHALL BE IDENTIFIED LISTING ORIGIN, INTERMEDIATE PULL POINTS AND TERMINATION, SPECIFIC LOCATIONS OF ORIGIN, INTERMEDIATE PULL POINTS AND TERMINATION. SPECIFIC LOCATIONS OF ORIGIN, INTERMEDIATE PULL POINTS AND TERMINATION SHALL BE INDICATED.
9. WHERE CONDUIT, CABLES, DUCTWORK, OR PIPING PASSES THROUGH FIRE RATED FLOORS OR WALLS, THE SLEEVES SHALL BE COMPLETELY SEALED WITH A FIRESTOP MATERIAL THAT IS UL LISTED, AND ACCEPTED BY THE BUILDING DEPARTMENT AND FIRE DEPARTMENT AS BEING SUITABLE FOR THIS SERVICE SUCH AS DOW CORNING CORP., SILICONE ELASTOMER, DOW CORNING 3–6548 SILICONE RTV FOAM, OR APPROVED EQUAL. THIS MATERIAL SHALL BE INSTALLED IN ACCORDANCE WITH THE REQUIREMENTS OF THE MANUFACTURER TO MAINTAIN THE FIRE RATING OF THE PENETRATED WALL OR FLOOR.
10. ELECTRICAL DRAWINGS ARE DIAGRAMMATIC ONLY. REFER TO ARCHITECTURAL DRAWINGS FOR EXACT LOCATIONS OF DEVICES AND LIGHTING FIXTURE LOCATIONS.
11. ALL WORK SHALL BE DONE IN ACCORDANCE WITH THE LATEST EDITION OF THE NATIONAL ELECTRICAL CODE (NFPA 70) AND LOCAL APPLICABLE CODES.
12. PROVIDE PROPER ACCESS PANELS AS SPECIFIED IN SECTION 08305 IN WALLS AND GWB CEILINGS FOR ANY EQUIPMENT, DEVICES, SWITCHES, CONTRACTORS, PULL AND JUNCTION BOXES ETC. REQUIRING PANELS TO BE PROVIDED BY TRADE CONTRACTOR FOR INSTALLATION BY G.C.
13. ELECTRICAL CONTRACTOR SHALL PROVIDE ALL CONDUIT, CABLE, CONNECTIONS, AND MATERIALS, FROM VFD'S AND DISCONNECTS TO MECHANICAL EQUIPMENT. PROVIDE MANUFACTURER'S SPECIFIED FLEX CONDUIT, RIGID CONDUIT OR WATER TIGHT CONDUIT AS REQUIRED. COORDINATE ALL LOCATIONS OF EQUIPMENT, VFD'S DISCONNECTS AND CONTROL PANELS PRIOR TO INSTALLATION.
14. THE ELECTRICAL CONTRACTOR SHALL VERIFY ALL LOCATIONS OF ELECTRICAL DEVICES PRIOR TO INSTALLATION. THE ELECTRICAL CONTRACTOR IS RESPONSIBLE FOR ALL MEANS AND METHODS OF INSTALLATION OF THE FOLLOWING ELECTRICAL DEVICES BUT IS NOT LIMITED TO ALL POKE THRUS, RECEPTACLES, COMMUNICATION ROUGH–INS, JUNCTION BOXES, ETC. ALL ROUTING AND INSTALLATION OF RACEWAY FEEDING ELECTRICAL DEVICES SHALL BE INSTALLED NEAT AND FLUSH TO SURFACE (WERE NOT IN DRYWALL) AND SHALL BE CONCEALED FROM VIEW IN DRYWALL WERE APPLIED.
15. ELECTRICAL CONTRACTOR SHALL PROVIDE A COMPLETE EMT RACEWAY SYSTEM FOR THE LOW VOLTAGE LIGHTING CONTROL WIRING.

Abbreviations

ADO	AUTOMATIC DOOR OPENER
AF	AMPERE FRAME
AFF	ABOVE FINISHED FLOOR
AT	AMPERE TRIP
ATS	AUTOMATIC TRANSFER SWITCH
BC	BARE COPPER
BRIP	BOILER PLANT INSTRUMENTATION PANEL
C	CONDUIT
CB, C/B, CKT BKR	CIRCUIT BREAKER
CKT	CIRCUIT
CCTV	CLOSED CIRCUIT T.V.
CLG	CEILING
DB	DIRECT BURIAL
EC	EMPTY CONDUIT
EG	EQUIPMENT GROUND
EHH	ELECTRIC HANDHOLE
EX	EXISTING
EJ	EXPANSION JOINT
EXP, XP	EXPLOSION PROOF
EMERG	EMERGENCY
EMH	ELECTRIC MANHOLE
ELEC	ELECTRIC
EWC	ELECTRIC WATER COOLER
ESM	ELECTRIC STRIP MOLD
FA	FIRE ALARM
FACP	FIRE ALARM CONTROL PANEL
FI	FILM ILLUMINATOR
FCU	FAN COIL UNIT
FIXT	FIXTURE
FLUOR	FLUORESCENT
FSS	FUSED SAFETY SWITCH
ESCP	FLAME SAFEGUARD CONTROL PANEL
G, GND	GROUND
GEN	GENERATOR
GTB	GROUND TERMINAL BOX
GFI	GROUND FAULT INTERRUPTER
HOA	HAND OFF AUTOMATIC
HH	HANDHOLE
HP	HORSE POWER
HV	HIGH VOLTAGE
INCAND	INCANDESCENT
JB	JUNCTION BOX
LTCP	LOCAL TEMPERATURE CONTROL PANEL
LTS	LIGHTS
LTG	LIGHTING
LV	LOW VOLTAGE
MATV	MASTER ANTENNA TELEVISION
MCB	MAIN CIRCUIT BREAKER
MCC	MOTOR CONTROL CENTER
MDP	MAIN DISTRIBUTION PANEL
MLO	MAIN LUGS ONLY
MH	MANHOLE
MTD	MOUNTED
MTG HGT	MOUNTING HEIGHT
NFSS	NON–FUSED SAFETY SWITCH
P	POLE
PB	PULL BOX
PBPU	PREFABRICATED BEDSIDE PATIENT POWER UNIT
PNL	PANEL
POD	POWER OPERATED DAMPER
PTRV	POWER TYPE ROOF VENTILATION
PWR	POWER
RECEPT	RECEPTACLE
RGIP	REMOTE GROUND INDICATOR PANEL
SHH	SIGNAL HANDHOLE
SI	SECURITY INTERCOM
SIG	SIGNAL
SMH	SIGNAL MANHOLE
SS	SAFETY SWITCH
STA	STATION
TEL	TELEPHONE
TV	TELEVISION
UH	UNIT HEATER
U.N.O.	UNLESS NOTED OTHERWISE
V	VOLTAGE
VP	VAPOR PROOF
W	WIRE
W/	WITH
WP	WEATHER PROOF
WT	WATER TIGHT
XFMR	TRANSFORMER

FOR CONSTRUCTION
FULLY SPRINKLERED

Revisions:	Date

CONSULTANTS:

HDR Architecture, Inc.
1101 King Street | Suite 400 | Alexandria, Virginia 22314-2944 | 703.518.8500

ARCHITECT/ENGINEERS:

ARCHITECTURE ENGINEERING INTERIOR DESIGN DESIGN/BUILD
ASTORINO
227 Fort Pitt Boulevard Pittsburgh Pennsylvania 15222
TEL 412 765 1700 FAX 412 765 1711 www.astorino.com

Drawing Title: **Electrical Symbols Abbreviations and General Notes**

Approved: Project Director

Project Title: **VA CARES CONSOLIDATION VAMC, PITTSBURGH, PA RESEARCH OFFICE BLDG.**

Location: **VAPHS UNIVERSITY DRIVE**

Date: **08-18-10** | Checked: **TMR** | Drawn: **LLG**

Project Number: **646CA2500R**

Building Number: **30**

Drawing Number: **EG0-101**

Dwg. -- of --

Office of Facilities Management

Department of Veterans Affairs

VA FORM 08–6231, OCT 1978

P:\Project\20054250\CAD\UNIVERSITY DRIVE\Research Office Building\Electrical\EG0-101.dwg SSTROBEL 01/27/10 - 09:49:31

Lighting Symbols

- FLUORESCENT INDUSTRIAL OR STRIP
- FLUORESCENT INDUSTRIAL OR STRIP ON NORMAL/EMERGENCY CIRCUIT.
- FLUORESCENT PENDANT LIGHTING FIXTURE. 4' UNIT
- FLUORESCENT PENDANT LIGHTING FIXTURE. 4' UNIT ON NORMAL/EMERGENCY CIRCUIT.
- RECESSED FLUORESCENT LIGHTING FIXTURE 2'x2' OR 2'x4' UNIT
- RECESSED FLUORESCENT LIGHTING FIXTURE 2'X2' OR 2'X4' UNIT. CENTER OF 3 LAMP FIXTURE OR 2 LAMPS ON A 4 LAMP FIXTURE ON NE CIRCUIT.
- WALL MOUNTED LIGHTING FIXTURE
- RECESSED DOWNLIGHT LIGHTING FIXTURE
- WALL MOUNTED LIGHTING FIXTURE ON NORMAL AND NORMAL/EMERGENCY CIRCUIT
- RECESSED DOWNLIGHT ON NORMAL AND NORMAL/EMERGENCY CIRCUIT
- WALL MOUNTED LIGHTING FIXTURE ON NORMAL/EMERGENCY CIRCUIT
- SINGLE FACE EXIT SIGN FIXTURE – WALL MOUNT DIRECTIONAL ARROWS AS INDICATED.
- DOUBLE FACE EXIT SIGN FIXTURE – WALL MOUNT DIRECTIONAL ARROWS AS INDICATED.
- OS — OCCUPANCY SENSOR
- SURFACE MOUNTED 12V BATTERY PACK UNIT – 2 HEADS (LIGHTOLIER# E4–2–10N–2–RT9–W)
- 12V REMOTE EMERGENCY HEAD (LIGHTOLIER# E4 SERIES 9W)
- PC — PHOTO CELL
- SBD — EMERGENCY LIGHTING RELAY CONTROL DEVICE (SWITCH BYPASS DEVICE)

Single Line Symbols

- BATTERY
- O.C.B. — HIGH VOLTAGE OIL CIRCUIT BREAKER
- HIGH VOLTAGE DRAWOUT AIR CIRCUIT BREAKER
- SWITCH AND FUSE UNIT
- MOLDED CASE CIRCUIT BREAKER
- LOW VOLTAGE DRAWOUT AIR CIRCUIT BREAKER
- FUSED DRAWOUT POTENTIAL TRANSFORMER
- A — AMMETER
- V — VOLTMETER
- W — WATTMETER
- WH — WATT–HOUR METER
- 50 — INSTANTANEOUS OVERCURRENT OR RATE–OF–RISE RELAY
- 51 — AC–TIME OVERCURRENT RELAY
- 67 — AC–DIRECTIONAL OVERCURRENT RELAY
- 86 — LOCKING OUT RELAY
- LIGHTNING ARRESTOR
- GROUND CONNECTION
- POTHEAD
- STRESS CONE
- PB — PUSH–BUTTON STATION
- CURRENT TRANSFORMER

General Symbols

CLG.	WALL	
J	J	JUNCTION BOX, MTD 1'–6" (450 MM) A.F.F. UNLESS NOTED OTHERWISE
3		MOTOR NUMBER DENOTES HORSEPOWER
G		GENERATOR
PB		PULL BOX
		NEW PANEL
		EXISTING PANEL
		CONTROLLER, MAGNETIC
		COMBINATION CONTROLLER AND DISCONNECT SWITCH
		FUSED OR UNFUSED DISCONNECT SWITCH.
CP		CONTROL PANEL
U		UNIT HEATER BLOWER MOTOR
		VENTILATOR OR FAN COIL UNIT OUTLET
		CONDUIT TERMINATED 6" (150 MM) A.F.F. IN STANDARD BOX FOR EXTENSION TO EQUIPMENT AS DIRECTED
		CONDUIT TERMINATED W/COUPLING (FLUSH W/FINISHED FLOOR) FOR EXTENSION TO EQUIPMENT AS DIRECTED
		FLEXIBLE CONDUIT – 1/2" (15 MM), W/3 #12 WIRES
		BRANCH CIRCUIT EXPOSED
		BRANCH CIRCUIT CONCEALED IN FLOOR.
		BRANCH CIRCUIT CONCEALED IN CEILING OR WALL.

No. OF CKTS. IN CONDUIT — PHASE CONDUCTORS — NEUTRAL — GROUND

HOME RUN TO PANEL – ARROWHEADS INDICATE CIRCUITS. WIRE INDICATED ARE GREEN GROUND, NEUTRAL AND THREE HOT LEGS (A DIFFERENT PHASE FOR EACH CIRCUIT) MAXIMUM THREE CIRCUITS PER CONDUIT. MINIMUM #12 AWG GROUND CONDUCTOR.

- RISER UP.
- RISER DOWN.
- S — SINGLE POLE SWITCH WITH SUFFIX A.B.C. ETC. INDICATES CONTROL OF FIXTURE(S) WITH SAME DESIGNATION(S).
- S_2 — DOUBLE POLE SWITCH
- S_3 — THREE–WAY SWITCH.
- S_4 — FOUR–WAY SWITCH.
- S_D — DIMMER SWITCH – WITH SILICON CONTROLLED RECTIFIER.
- S_T — TIME SWITCH.
- S_R — ROCKER TYPE SWITCH.
- S_{EXP} — EXPLOSION PROOF SWITCH
- S_K — KEY OPERATED SWITCH.
- S_L — LOCK TYPE SWITCH.
- S_{LV} — LOW VOTAGE SWITCH.
- S_{LVD} — LOW VOTAGE SWITCH WITH FLUORESCENT DIMMER.
- S_M — MANUAL MOTOR STARTING SWITCH
- S_{MC} — MOMENTARY CONTACT SWITCH.
- S_{MP} — MOTOR SNAP SWITCH (THERMAL TYPE) WITH PILOT LIGHT.
- S_{OS} — WALL SWITCH DUAL TECHNOLOGY.
- S_{PB} — PUSH BUTTON STATION.
- S_P — SWITCH WITH PILOT LIGHT.
- S_{RC} — REMOTE CONTROL SWITCH.
- S_{WP} — WEATHERPROOF SWITCH.

Mounting Heights Schedule

6'–8" AFF OR 6" BELOW FINISHED CEILING, WHICHEVER IS LOWER (TO CENTERLINE OF STROBE)	FIRE ALARM HORNS/STROBES
REFERENCE LUMINAIRE SCHEDULE FOR MOUNTING REQUIREMENTS	PENDANT MOUNTED LUMINAIRES
6'–6"	TOP OF PANELBOARDS, CABINETS
6'–0"	TOP OF DISCONNECT SWITCHES, STARTERS, AND CONTACTORS
4'–0" (TOP OF DEVICES)	LIGHT SWITCHES, FIRE ALARM PULL STATIONS, MANUAL MOTOR STARTERS, FIREMAN'S TELEPHONES, NURSE CALL PULL CORD, PUSH BUTTON, DUTY STATIONS AND PANIC BUTTONS
3'–6" (TOP OF DEVICES)	WALL MOUNTED HANDICAPPED TELEPHONE OUTLETS
2'–0"	ELECTRICAL RECEPTACLES IN MECHANICAL/ELECTRICAL ROOMS & ELEVATOR MACHINE ROOMS
1'–6"	ELECTRICAL RECEPTACLES (U.N.O.) COMMUNICATIONS/DATA OUTLETS (U.N.O.)
0'–0"	FINISHED FLOOR

NOTE:

1. CTR – MOUNTED 6" ABOVE COUNTER OR BACKSPLASH.

FOR CONSTRUCTION
FULLY SPRINKLERED

Revisions:	Date

CONSULTANTS:

HDR Architecture, Inc.
1101 King Street | Suite 400 | Alexandria, Virginia 22314-2944 | 703.518.8500

ARCHITECT/ENGINEERS:

ARCHITECTURE ENGINEERING INTERIOR DESIGN DESIGN/BUILD
ASTORINO
327 Fort Pitt Boulevard Pittsburgh Pennsylvania 15222
TEL 412 765 1700 FAX 412 765 1711 www.astorino.com

Drawing Title: **Electrical Symbols**

Approved: Project Director

Project Title: **VA CARES CONSOLIDATION VAMC, PITTSBURGH, PA RESEARCH OFFICE BLDG.**

Location: **VAPHS UNIVERSITY DRIVE**

Date: **08-18-10** | Checked: **TMR** | Drawn: **LLG**

Project Number: **646CA2500R**

Building Number: **30**

Drawing Number: **EG0-102**

Dwg. -- of --

Office of Facilities Management

Department of Veterans Affairs

VA FORM 08–6231, OCT 1978

P:\Project\2005425.00\CAD\UNIVERSITY DRIVE\Research Office Building\Electrical\ESO-102.dwg LGARDNER 03/12/09 - 09:58:53

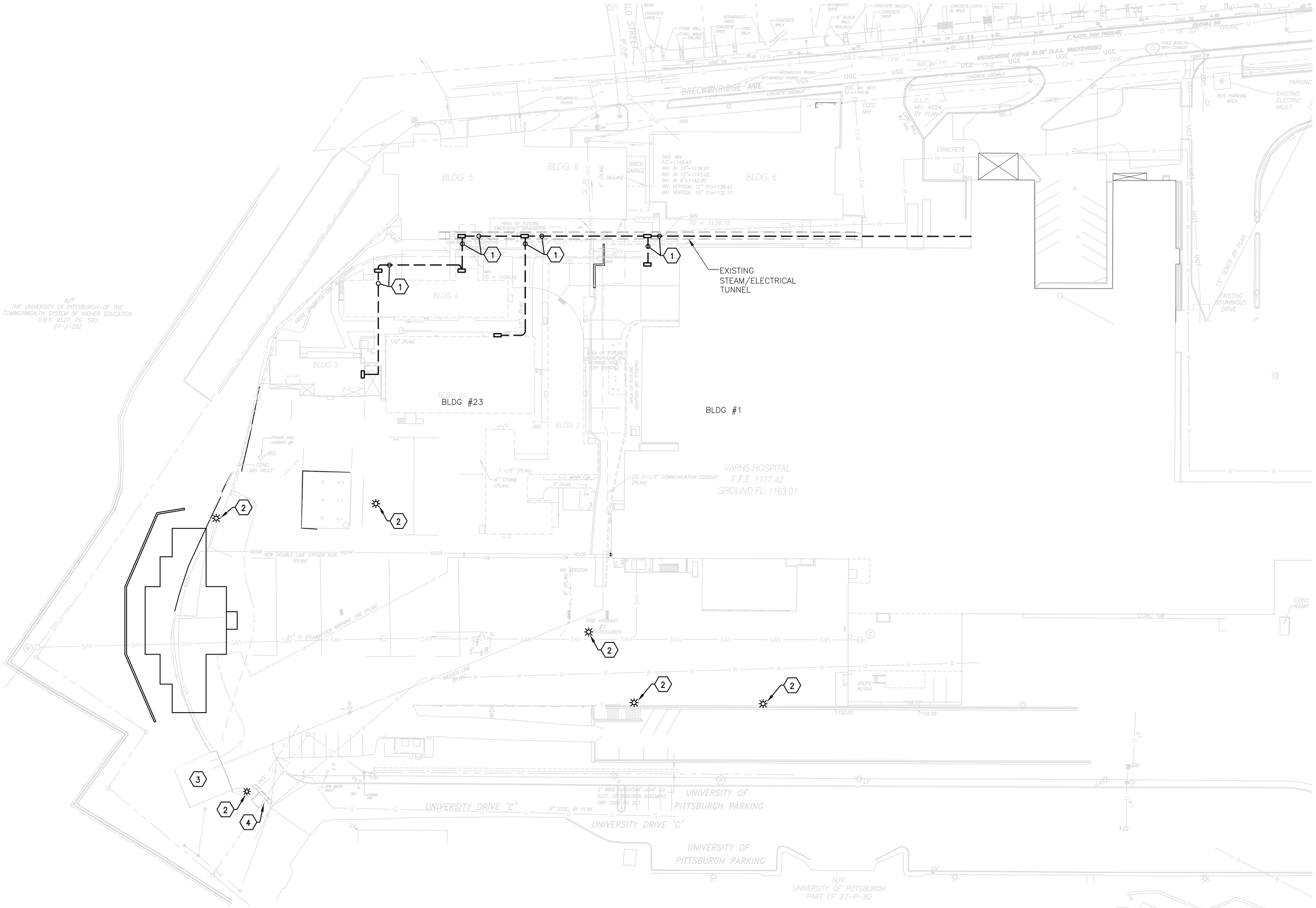

1 Electrical Demolition - Site Plan
SCALE: 1/32"=1'-0"

Key Notes

1. EXISTING UNDERGROUND SERVICE FEEDER SHALL BE DE-ENERGIZED, DISCONNECTED AND REMOVED.
2. EXTERIOR LIGHTING STANDARD & CONCRETE BASE SHALL BE DE-ENERGIZED, DISCONNECTED AND REMOVED AFTER NEW EXTERIOR LIGHTING IS OPERATIONAL. PROVIDE TEMPORARY SITE LIGHTING AS PER SPECIFICATIONS. MAINTAIN CONTINUITY OF EXISTING CIRCUIT SERVING EXISTING EXTERIOR LIGHTING POLES TO REMAIN.
3. EXISTING LIQUID OXYGEN TANKS TO REMAIN. CONTRACTOR TO FIELD TRACE AND MARK THE LOCATION OF THE EXISTING UNDERGROUND ELECTRICAL FEEDERS SERVING THE OXYGEN TANKS. MAINTAIN CONTINUITY OF EXISTING CIRCUITS SERVING TANKS AT ALL TIME. AT NO TIME SHALL ELECTRICAL SERVICE BE DISTURBED.
4. EXISTING GUARD SHACK TO BE DE-ENERGIZE, DISCONNECTED AND REMOVED AFTER NEW SHACK IS OPERATIONAL. PROVIDE TEMPORY ELECTRIC AND TELECOMMUNICATION SERVICE TO SHACK AS NEEDED.

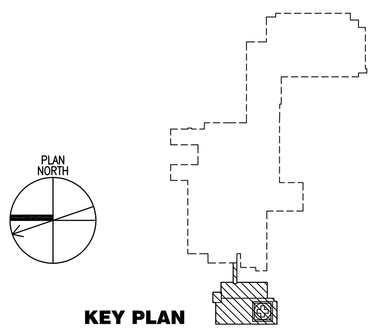

KEY PLAN

FOR CONSTRUCTION
FULLY SPRINKLERED

Revisions:	Date

CONSULTANTS:

HDR Architecture, Inc.
1101 King Street | Suite 400 | Alexandria, Virginia 22314-2944 | 703.518.8500

ARCHITECT/ENGINEERS:

ARCHITECTURE ENGINEERING INTERIOR DESIGN DESIGN/BUILD
ASTORINO
227 Fort Pitt Boulevard Pittsburgh Pennsylvania 15222
TEL 412 765 1700 FAX 412 765 1711 www.astorino.com

Drawing Title: **Electrical Demolition Site Plan**

Approved: Project Director

Project Title: **VA CARES CONSOLIDATION VAMC, PITTSBURGH, PA RESEARCH OFFICE BLDG.**

Location: **VAPHS UNIVERSITY DRIVE**

Date: **08-18-10** | Checked: **TMR** | Drawn: **LLG**

Project Number: **646CA2500R**

Building Number: **30**

Drawing Number: **ED0-201**
Dwg. -- of --

Office of Facilities Management

Department of Veterans Affairs

VA FORM 08-6231, OCT 1978

P:\Project\2005425.00\CAD\UNIVERSITY DRIVE\Research Office Building\Electrical\ED0-201.dwg SSTROBEL 08/17/10 ; 10:35:30

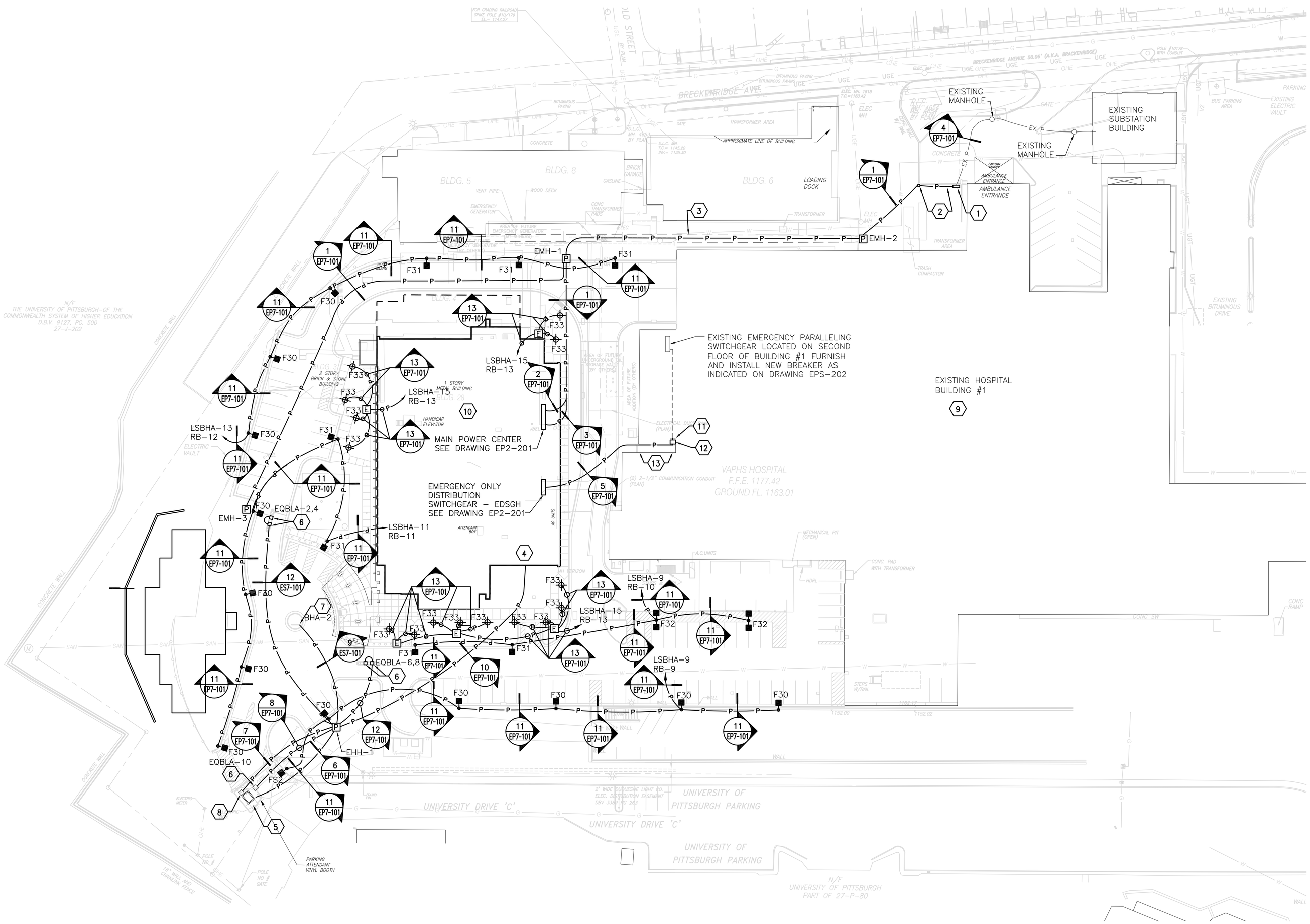

1 Electrical - Site Plan
SCALE: 1/32"=1'-0"

Key Notes

1. PROVIDE A NEMA 4X STAINLESS STEEL PULLBOX SIZED SHALL ACCOMMODATE RACEWAYS AND WIRING. PULLBOX SHALL BE SURFACE MOUNTED ON EXISTING CONCRETE RETAINING WALL. SEE DRAWING EP7-103.
2. 4-5" RIGID STEEL CONDUITS TWO WITH 3-500KCMIL - 5KV-SHD & 1-4/0(600V)GND AND 2-4" SPARE. RACEWAY SHALL BE SURFACE MOUNTED ON EXISTING RETAINING WALL. SEE DETAIL ON DRAWING EP7-103.
3. 2-5" RIGID STEEL CONDUITS WITH 3-500KCMIL - 5KV-SHD & 1-4/0(600V)GND SHALL BE INSTALLED IN EXISTING STEAM/ELECTRIC TUNNEL. SEE DETAIL SHEET THIS SHEET. (CIRCUITS 1E & 2E).
4. SEE DRAWING EP4-201 FOR CONTINUATION OF RACEWAYS AND WIRING.
5. GUARD BOOTH - STRUCTURE SHALL BE FURNISHED WITH 208V, 1Ø, 100A, 12 CCT. PANELBOARD.
6. GATE OPERATOR - 1/3HP, 120V, 1Ø.
7. ILLUMINATED SIGN - 120V, 1Ø.
8. ROLLING GATE OPERATOR - 1HP, 480V, 3Ø.
9. REMOTE ANNUNCIATOR FOR ROB AUTOMATIC TRANSFER SWITCHES ATS-ELEV, ATS-EQ, ATS-LS AND FIRE PUMP CONTROLLER. VERIFY MOUNTING LOCATION WITH VA PRIOR TO ROUGH-IN. PROVIDE ALL RACEWAY AND WIRING AS REQUIRED.
10. PROVIDE A UL MASTER LABEL LIGHTNING PROTECTION SYSTEM AS PER ELECTRICAL SPECIFICATIONS. (SYSTEM TO INCLUDE ROOF TOP HELIPORT.)
11. INTERCEPT EXISTING 6-4" CONDUITS AND EXTEND 4-4" CONDUITS TO NEW EMERGENCY DISTRIBUTION SWITCHGEAR - EDSGH AND 2-4" CONDUITS TO ATS CONTROL PANELS. CLEAN INTERIOR OF NEW AND EXISTING RACEWAYS AND PROVIDE FEEDERS AND ATS CONTROL WIRING PER SCHEDULE ON DRAWING ES7-101.
12. FEEDER/COMMUNICATION PULLBOX WITH DIVIDER TO BE WALL MOUNTED IN EXISTING GENERATOR ROOM. PULLBOX TO BE SIZED TO ACCOMMODATE RACEWAYS AND FEEDERS INDICATED ON DRAWING ES7-101.
13. RACEWAYS TO BE RUN EXPOSED IN EXISTING AREA WAY. PROVIDE CONDUIT RACK SUPPORT AS REQUIRED.

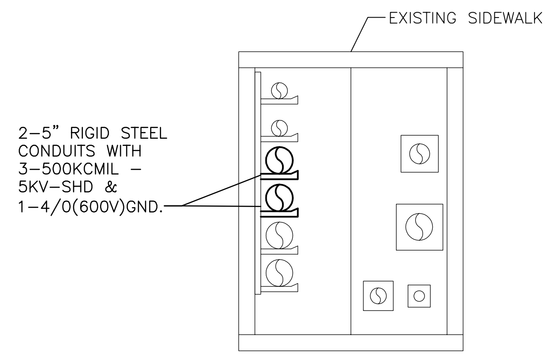

2 Existing Tunnel
SCALE: No Scale

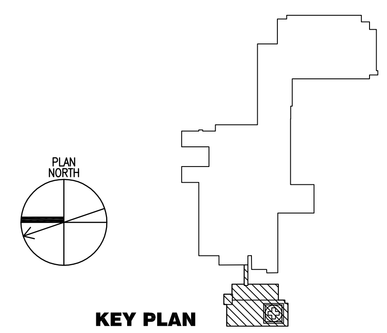

KEY PLAN

FOR CONSTRUCTION
FULLY SPRINKLERED

Revisions:	Date

CONSULTANTS:

HDR Architecture, Inc.
1101 King Street | Suite 400 | Alexandria, Virginia 22314-2944 | 703.518.8500

ARCHITECT/ENGINEERS:

ARCHITECTURE ENGINEERING INTERIOR DESIGN DESIGN/BUILD
ASTORINO
227 Fort Pitt Boulevard Pittsburgh Pennsylvania 15222
TEL 412 765 3700 FAX 412 765 3711 www.astorino.com

Drawing Title	Electrical Site Plan
Approved: Project Director	
Project Title	VA CARES CONSOLIDATION VAMC, PITTSBURGH, PA RESEARCH OFFICE BLDG.
Project Number	646CA2500R
Building Number	30
Location	VAPHS UNIVERSITY DRIVE
Date	08-18-10
Checked	TMR
Drawn	LLG
Drawing Number	ES0-201
Dwg. -- of --	

Office of Facilities Management
Department of Veterans Affairs

VA FORM 08-6231, OCT 1978

P:\Project\200542500\CAD\UNIVERSITY DRIVE\Research Office Building\Electrical\ES0-201.dwg SSTROBEL 08/18/10 ; 08:39:57

Key Notes

1. PROVIDE 120V, 20 AMP CIRCUIT TO AHU INTERIOR LIGHTING. COORDINATE SWITCH LOCATION WITH EQUIPMENT MANUFACTURER.
2. CONTRACTOR TO COORDINATE FINAL MOUNTING LOCATION OF LIGHT FIXTURES WITH ELEVATOR EQUIPMENT LAYOUT.
3. PROVIDE 4 ADDITIONAL TYPE F27 FIXTURES WALL MOUNTED IN ELEVATOR HOISTWAY. FIXTURES TO BE SERVED FROM CIRCUIT LSBHA–7 AND SWITCHED IN MACHINE ROOM.

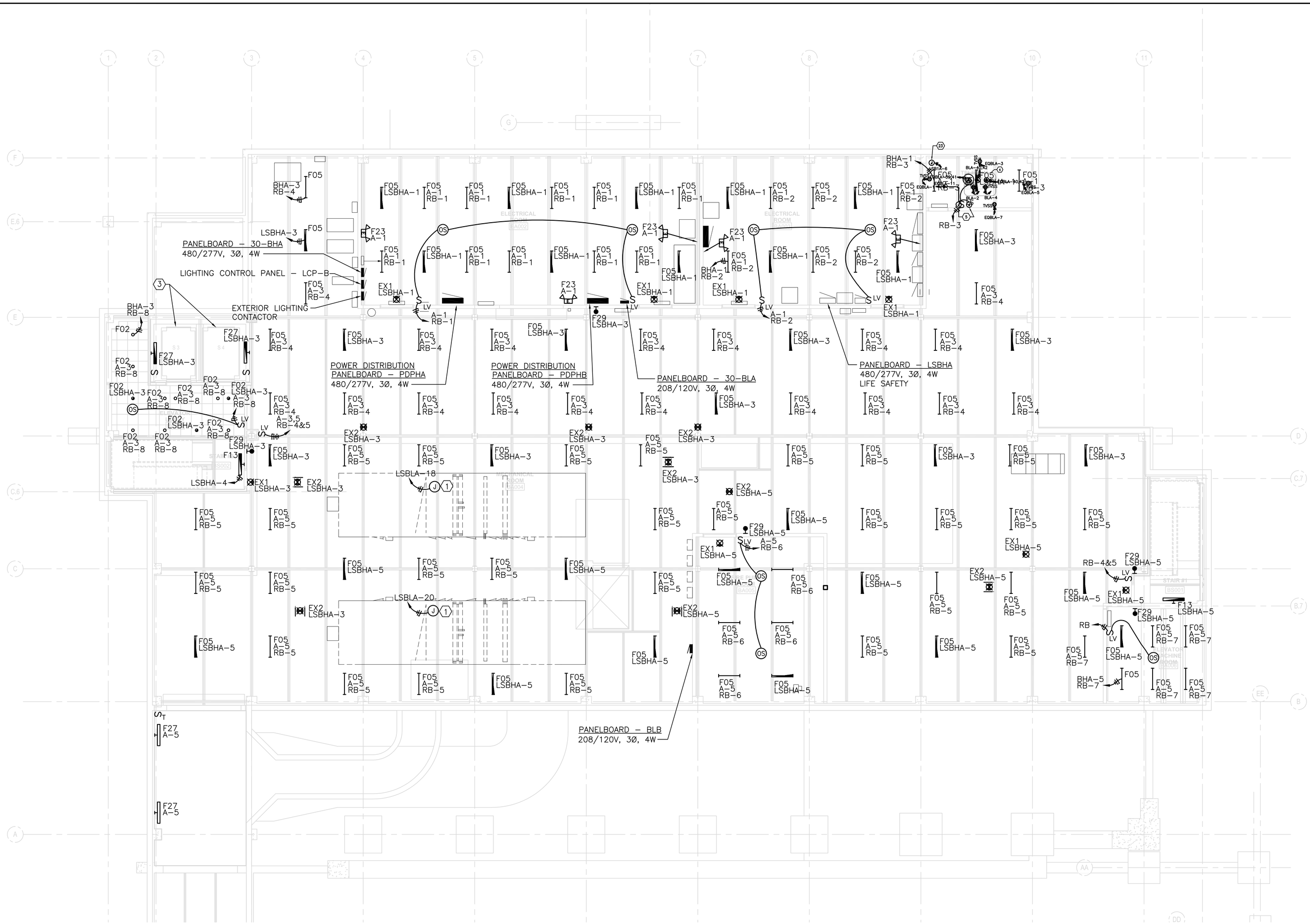

1 Lighting - Basement Plan
SCALE: 1/8"=1'-0"

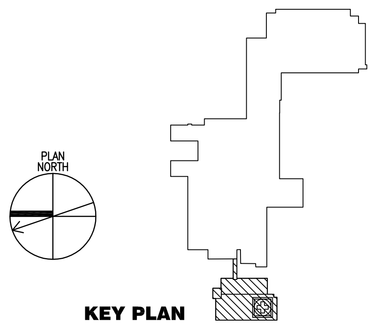

FOR CONSTRUCTION
FULLY SPRINKLERED

Revisions:	Date

CONSULTANTS:

HDR Architecture, Inc.
1101 King Street | Suite 400 | Alexandria, Virginia 22314-2944 | 703.518.8500

ARCHITECT/ENGINEERS:

ARCHITECTURE ENGINEERING INTERIOR DESIGN DESIGN/BUILD
ASTORINO
227 Fort Pitt Boulevard Pittsburgh Pennsylvania 15222
TEL 412.765.1700 FAX 412.765.1711 www.astorino.com

Drawing Title: **Lighting Basement Plan**

Approved: Project Director

Project Title: **VA CARES CONSOLIDATION VAMC, PITTSBURGH, PA RESEARCH OFFICE BLDG.**

Location: **VAPHS UNIVERSITY DRIVE**

Date: **08-18-10** | Checked: **TMR** | Drawn: **DRS**

Project Number: **646CA2500R**

Building Number: **30**

Drawing Number: **EL1-101**
Dwg. -- of --

Office of Facilities Management

Department of Veterans Affairs

VA FORM 08-6231, OCT 1978

P:\Project\20050425.00\040\UNIVERSITY DRIVE\Research Office Building\Electrical\EL1-101.dwg SSTROBEL 08/18/10 ; 14:00:54

Key Notes

1. PROVIDE 120V, 20 AMP CIRCUIT TO AHU INTERIOR LIGHTING. COORDINATE SWITCH LOCATION WITH EQUIPMENT MANUFACTURER.
2. CONTRACTOR TO COORDINATE FINAL MOUNTING LOCATION OF LIGHT FIXTURES WITH ELEVATOR EQUIPMENT LAYOUT.

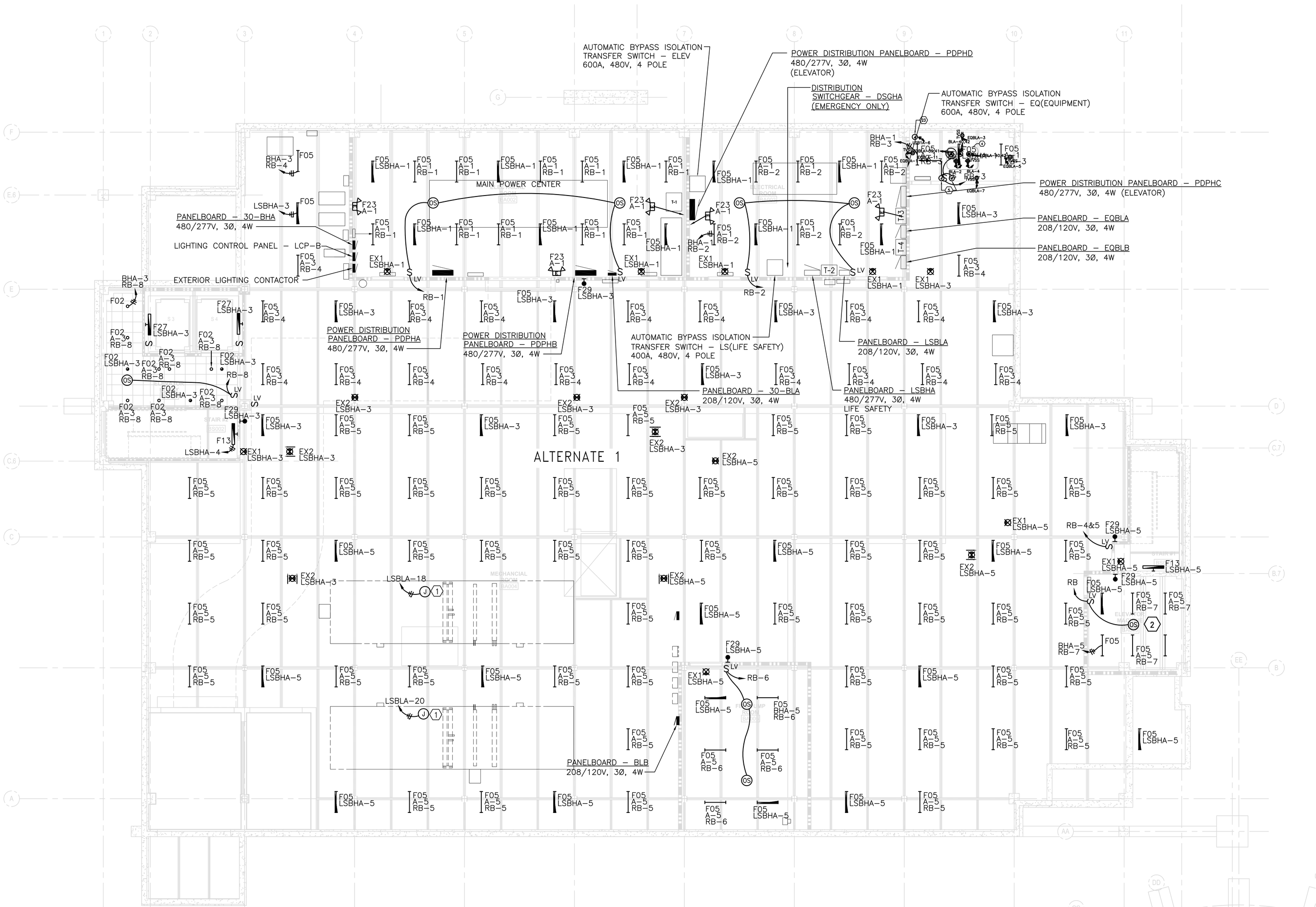

1 Lighting - Basement Plan - Alternate
SCALE: 1/8"=1'-0"

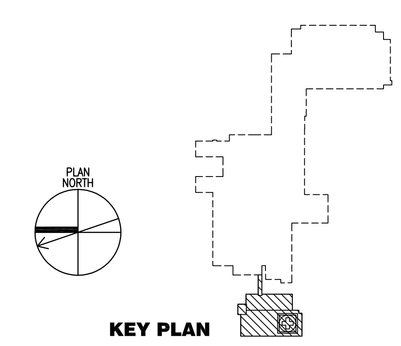

KEY PLAN

FOR CONSTRUCTION
FULLY SPRINKLERED

Revisions:	Date

CONSULTANTS:

HDR Architecture, Inc.
1101 King Street | Suite 400 | Alexandria, Virginia 22314-2944 | 703.518.8500

ARCHITECT/ENGINEERS:

ARCHITECTURE ENGINEERING INTERIOR DESIGN DESIGN/BUILD
ASTORINO
227 Fort Pitt Boulevard Pittsburgh Pennsylvania 15222
TEL 412 765 1700 FAX 412 765 1711 www.astorino.com

Drawing Title: **Lighting Basement Plan - Alternate**

Approved: Project Director

Project Title: **VA CARES CONSOLIDATION VAMC, PITTSBURGH, PA RESEARCH OFFICE BLDG.**

Location: **VAPHS UNIVERSITY DRIVE**

Date: **08-18-10** | Checked: **TMR** | Drawn: **DRS**

Project Number: **646CA2500R**

Building Number: **30**

Drawing Number: **EL1-101A**
Dwg. -- of --

Office of Facilities Management
Department of Veterans Affairs

VA FORM 08-6231, OCT 1978

P:\Project\20054235.00\CAD\UNIVERSITY DRIVE\Research Office Building\Electrical\EL1-101a.dwg SSTROBEL 08/18/10 - 14:00:07

Key Notes

1. PROVIDE 4' F04 FIXTURE RECESSED VERTICALLY IN WALL WITH TOP OF FIXTURE AT THE CEILING. PROVIDE 2' F04 FIXTURE RECESSED IN CEILING WITH END OF FIXTURE AT WALL IN LINE WITH VERTICALLY MOUNTED FIXTURE.

2. GRAFIK EYE LIGHTING CONTROL PANEL (QS3000).

PROVIDE 3 ADDITIONAL TYPE F27 FIXTURES WALL MOUNTED IN ELEVATOR HOISTWAY. FIXTURES TO BE SERVED FROM CIRCUIT LSGHA-7 AND SWITCHED IN MACHINE ROOM.

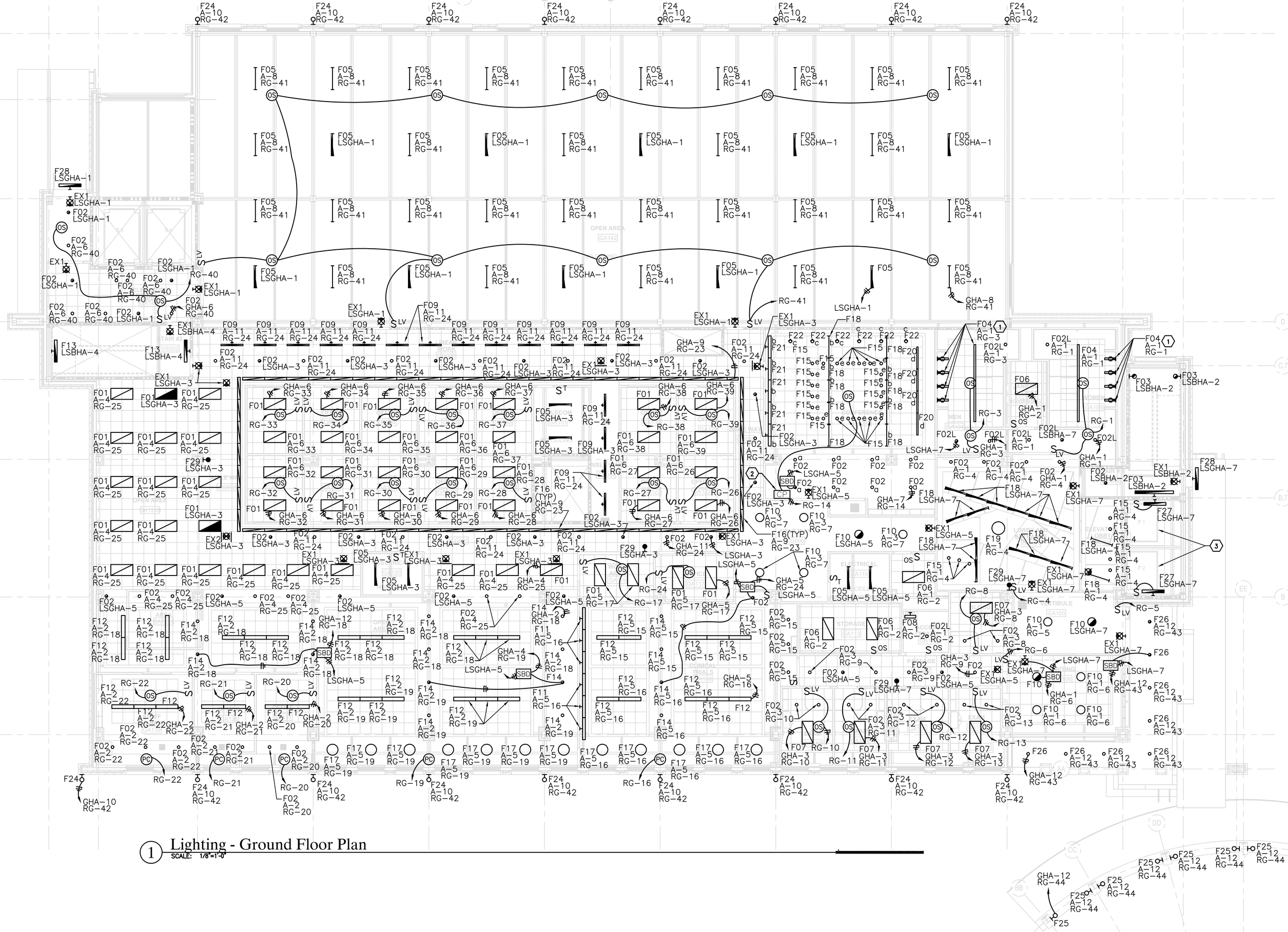

1 Lighting - Ground Floor Plan
SCALE: 1/8"=1'-0"

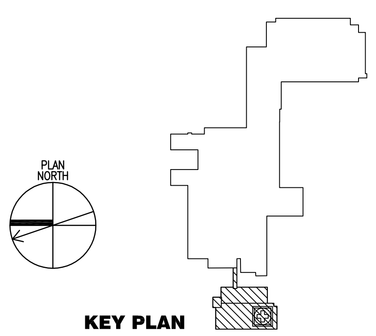

KEY PLAN

FOR CONSTRUCTION
FULLY SPRINKLERED

CONSULTANTS:

HDR Architecture, Inc.
1101 King Street | Suite 400 | Alexandria, Virginia 22314-2944 | 703.518.8500

ARCHITECT/ENGINEERS:

ARCHITECTURE ENGINEERING INTERIOR DESIGN DESIGN/BUILD
ASTORINO
227 Fort Pitt Boulevard Pittsburgh Pennsylvania 15222
TEL 412 765 1700 FAX 412 765 1711 www.astorino.com

Revisions:	Date

Drawing Title: **Lighting Ground Floor Plan**

Approved: Project Director

Project Title: **VA CARES CONSOLIDATION VAMC, PITTSBURGH, PA RESEARCH OFFICE BLDG.**

Location: **VAPHS UNIVERSITY DRIVE**

Date: **08-18-10** | Checked: **TMR** | Drawn: **DRS**

Project Number: **646CA2500R**

Building Number: **30**

Drawing Number: **EL1-111**
Dwg. -- of --

Office of Facilities Management
Department of Veterans Affairs

VA FORM 08-6231, OCT 1978

P:\Project\2005425.00\CAD\UNIVERSITY DRIVE\Research Office Building\Electrical\EL1-111.dwg SSTROBEL 08/18/10 - 13:59:17

Key Notes

1. PROVIDE 4' F04 FIXTURE RECESSED VERTICALLY IN WALL WITH TOP OF FIXTURE AT THE CEILING. PROVIDE 2' F04 FIXTURE RECESSED IN CEILING WITH END OF FIXTURE AT WALL IN LINE WITH VERTICALLY MOUNTED FIXTURE.
2. GRAFIK EYE LIGHTING CONTROL PANEL (QS3000).

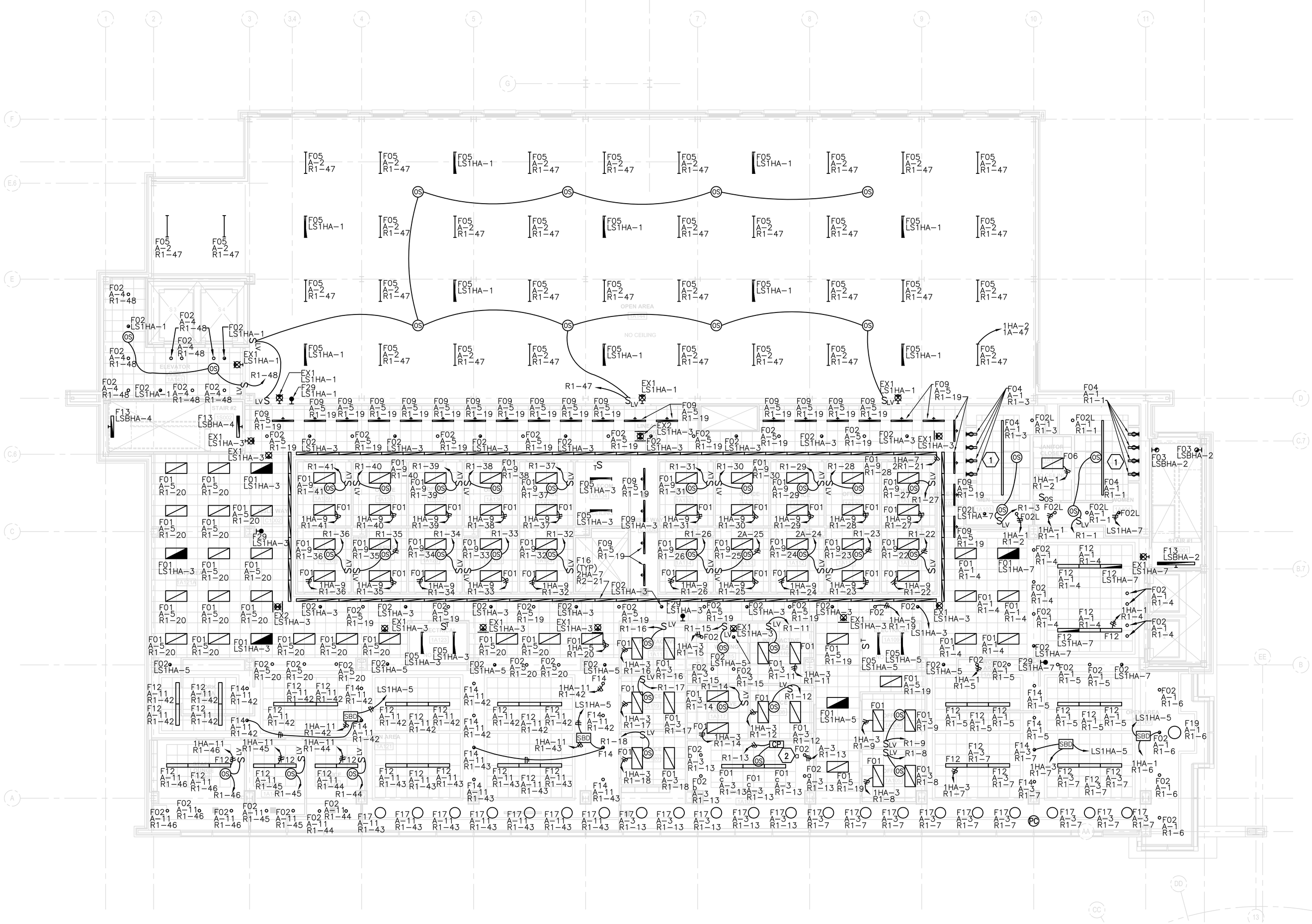

1 Lighting - 1st Floor Plan
SCALE: 1/8"=1'-0"

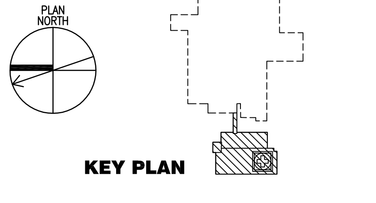

KEY PLAN

FOR CONSTRUCTION
FULLY SPRINKLERED

Revisions:	Date

CONSULTANTS:

HDR Architecture, Inc.
1101 King Street | Suite 400 | Alexandria, Virginia 22314-2944 | 703.518.8500

ARCHITECT/ENGINEERS:

ARCHITECTURE ENGINEERING INTERIOR DESIGN DESIGN/BUILD
ASTORINO
227 Fort Pitt Boulevard Pittsburgh Pennsylvania 15222
TEL 412 765 1700 FAX 412 765 1711 www.astorino.com

Drawing Title: **Lighting 1st Floor Plan**

Approved: Project Director

Project Title: **VA CARES CONSOLIDATION VAMC, PITTSBURGH, PA RESEARCH OFFICE BLDG.**

Project Number: **646CA2500R**

Building Number: **30**

Location: **VAPHS UNIVERSITY DRIVE**

Date: **08-18-10** | Checked: **TMR** | Drawn: **DRS**

Drawing Number: **EL1-121**
Dwg. -- of --

Office of Facilities Management
Department of Veterans Affairs

VA FORM 08-6231, OCT 1978

P:\Project\20054250\CAD\UNIVERSITY DRIVE\Research Office Building\Electrical\EL1-121.dwg LGARDNER 01/05/10 - 09:34:55

Key Notes

1. PROVIDE 4' F04 FIXTURE RECESSED VERTICALLY IN WALL WITH TOP OF FIXTURE AT THE CEILING. PROVIDE 2' F04 FIXTURE RECESSED IN CEILING WITH END OF FIXTURE AT WALL IN LINE WITH VERTICALLY MOUNTED FIXTURE.
2. GRAFIK EYE LIGHTING CONTROL PANEL (QS3000).

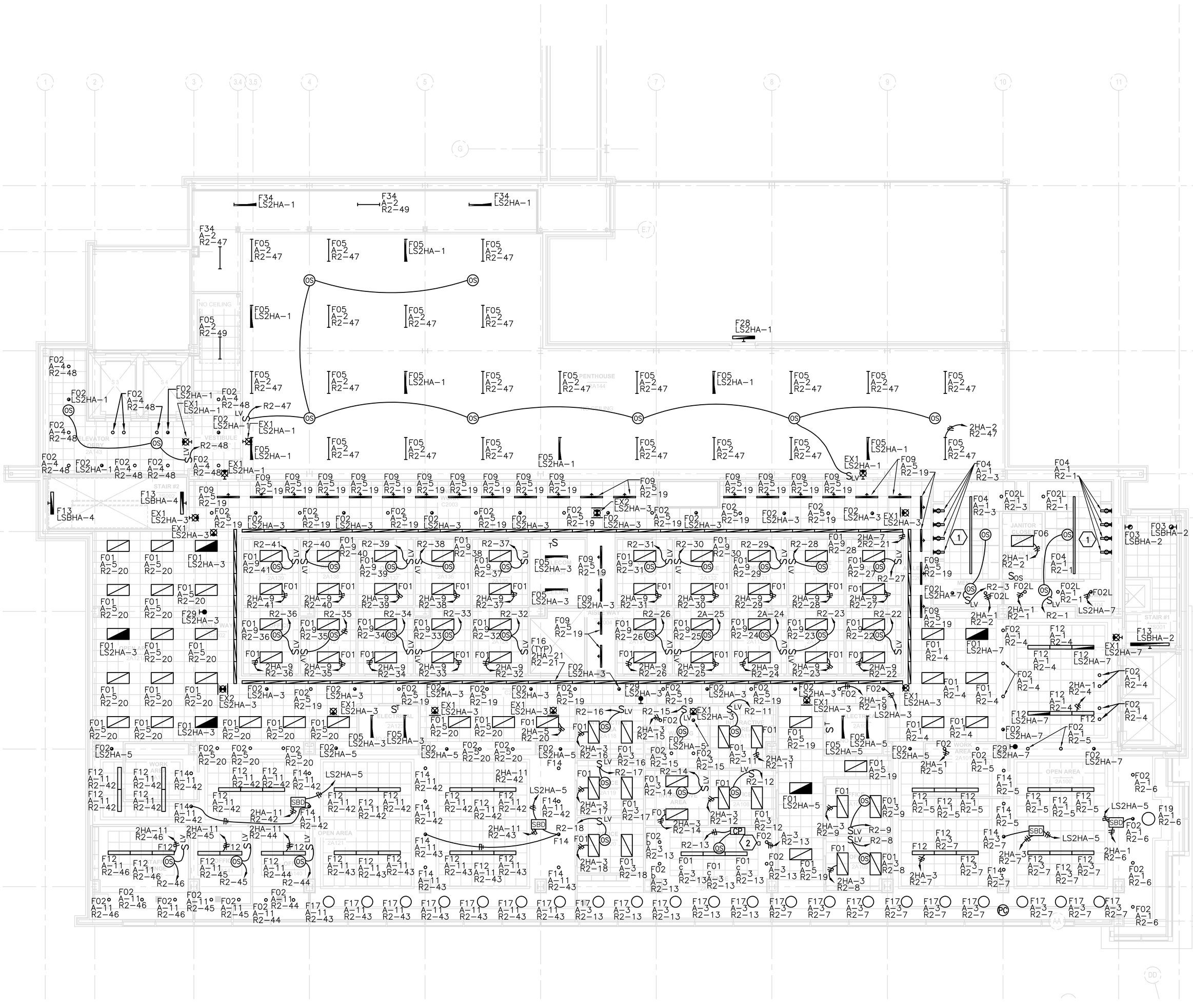

1 Lighting - 2nd Floor Plan
SCALE: 1/8"=1'-0"

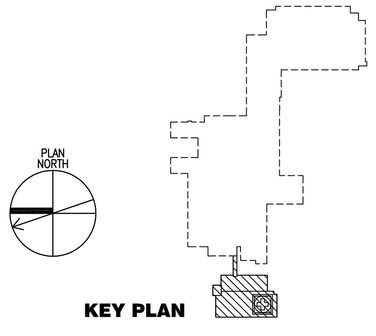

FOR CONSTRUCTION
FULLY SPRINKLERED

Revisions:	Date

CONSULTANTS:

HDR Architecture, Inc.
1101 King Street | Suite 400 | Alexandria, Virginia 22314-2944 | 703.518.8500

ARCHITECT/ENGINEERS:

ARCHITECTURE ENGINEERING INTERIOR DESIGN DESIGN/BUILD
ASTORINO
227 Fort Pitt Boulevard Pittsburgh Pennsylvania 15222
TEL 412 765 1700 FAX 412 765 1711 www.astorino.com

Drawing Title: **Lighting 2nd Floor Plan**

Approved: Project Director

Project Title: **VA CARES CONSOLIDATION VAMC, PITTSBURGH, PA RESEARCH OFFICE BLDG.**

Location: **VAPHS UNIVERSITY DRIVE**

Date: **08-18-10** | Checked: **TMR** | Drawn: **DRS**

Project Number: **646CA2500R**
Building Number: **30**
Drawing Number: **EL1-131**
Dwg: -- of --

Office of Facilities Management
Department of Veterans Affairs

VA FORM 08-6231, OCT 1978

P:\Project\20054250.00\CAD\UNIVERSITY DRIVE\Research Office Building\Electrical\EL1-131.dwg SSTROBEL 08/18/10 - 13:58:14

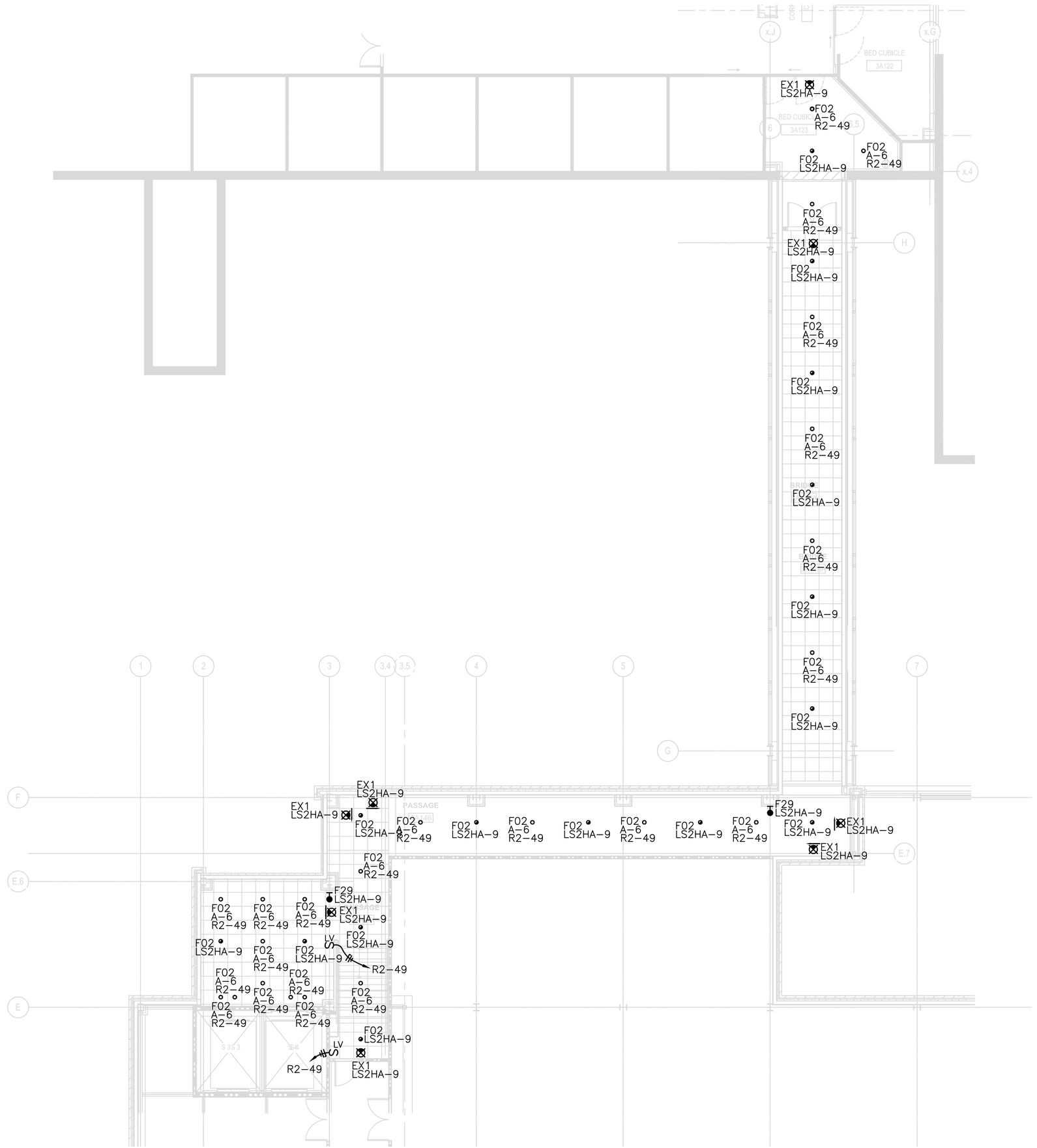

1 Lighting - Bridge Plan
SCALE: 1/8"=1'-0"

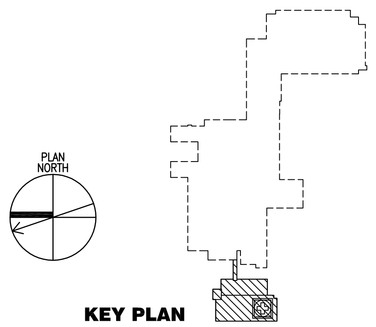

KEY PLAN

FOR CONSTRUCTION
FULLY SPRINKLERED

Revisions:	Date

CONSULTANTS:

HDR

HDR Architecture, Inc.

1101 King Street | Suite 400 | Alexandria, Virginia 22314-2944 | 703.518.8500

ARCHITECT/ENGINEERS:

ARCHITECTURE
ENGINEERING
INTERIOR DESIGN
DESIGN/BUILD

ASTORINO

227 Fort Pitt Boulevard Pittsburgh Pennsylvania 15222
TEL 412 765 1700 FAX 412 765 1711 www.astorino.com

Drawing Title: **Lighting Bridge Plan**

Approved: Project Director

Project Title: **VA CARES CONSOLIDATION VAMC, PITTSBURGH, PA RESEARCH OFFICE BLDG.**

Location: **VAPHS UNIVERSITY DRIVE**

Date: **08-18-10** | Checked: **TMR** | Drawn: **DRS**

Project Number: **646CA2500R**

Building Number: **30**

Drawing Number: **EL1-132**
Dwg. -- of --

Office of Facilities Management

Department of Veterans Affairs

VA FORM 08-6231, OCT 1978

P:\Project\200542500\CAD\UNIVERSITY DRIVE\Research Office Building\Electrical\EL1-132.dwg SSTROBEL 08/18/10 : 13:57:10

Key Notes

1. CONTRACTOR TO COORDINATE FINAL MOUNTING LOCATION OF LIGHT FIXTURES WITH ELEVATOR EQUIPMENT LAYOUT.

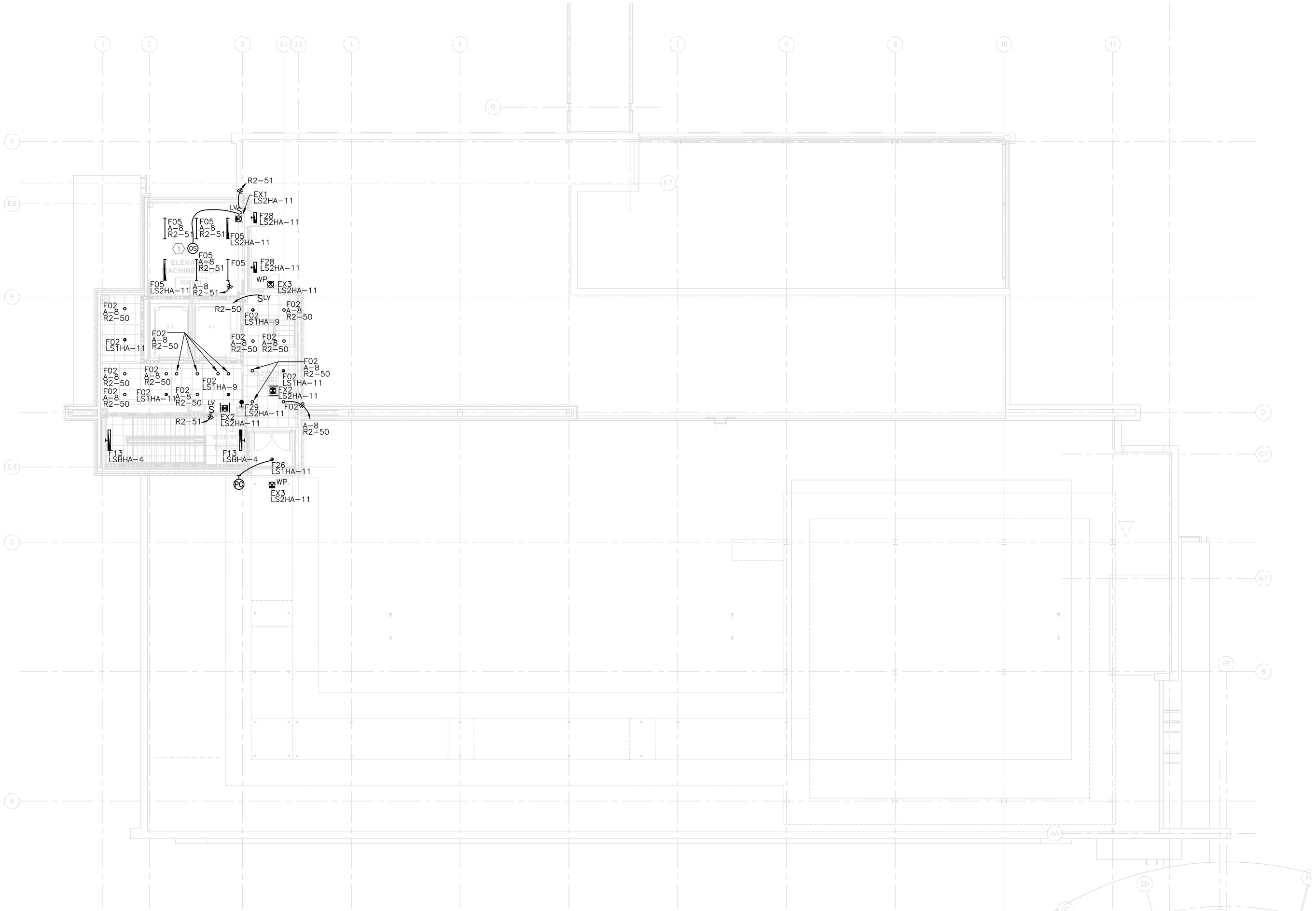

1 Lighting - Roof Plan
SCALE: 1/8"=1'-0"

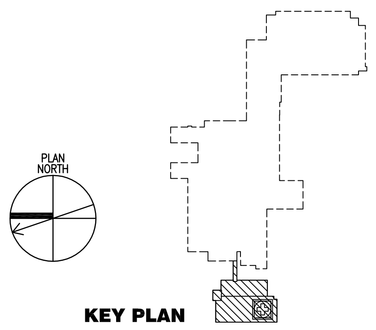

KEY PLAN

FOR CONSTRUCTION
FULLY SPRINKLERED

Revisions:	Date

CONSULTANTS:

HDR

HDR Architecture, Inc.

1101 King Street | Suite 400 | Alexandria, Virginia 22314-2944 | 703.518.8500

ARCHITECT/ENGINEERS:

ARCHITECTURE ENGINEERING INTERIOR DESIGN DESIGN/BUILD

ASTORINO

227 Fort Pitt Boulevard Pittsburgh Pennsylvania 15222
TEL 412 765 1700 FAX 412 765 1711 www.astorino.com

Drawing Title	Lighting Roof Plan
Approved: Project Director	
Project Title	VA CARES CONSOLIDATION VAMC, PITTSBURGH, PA RESEARCH OFFICE BLDG.
Location	VAPHS UNIVERSITY DRIVE
Date	08-18-10
Checked	TMR
Drawn	DRS
Project Number	646CA2500R
Building Number	30
Drawing Number	EL1-141
Dwg. -- of --	

Office of Facilities Management

Department of Veterans Affairs

VA FORM 08-6231, OCT 1978

P:\Project\2005425.00\CAD\UNIVERSITY DRIVE\Research Office Building\Electrical\EL1-141.dwg SSTROBEL 08/18/10 : 13:56:31

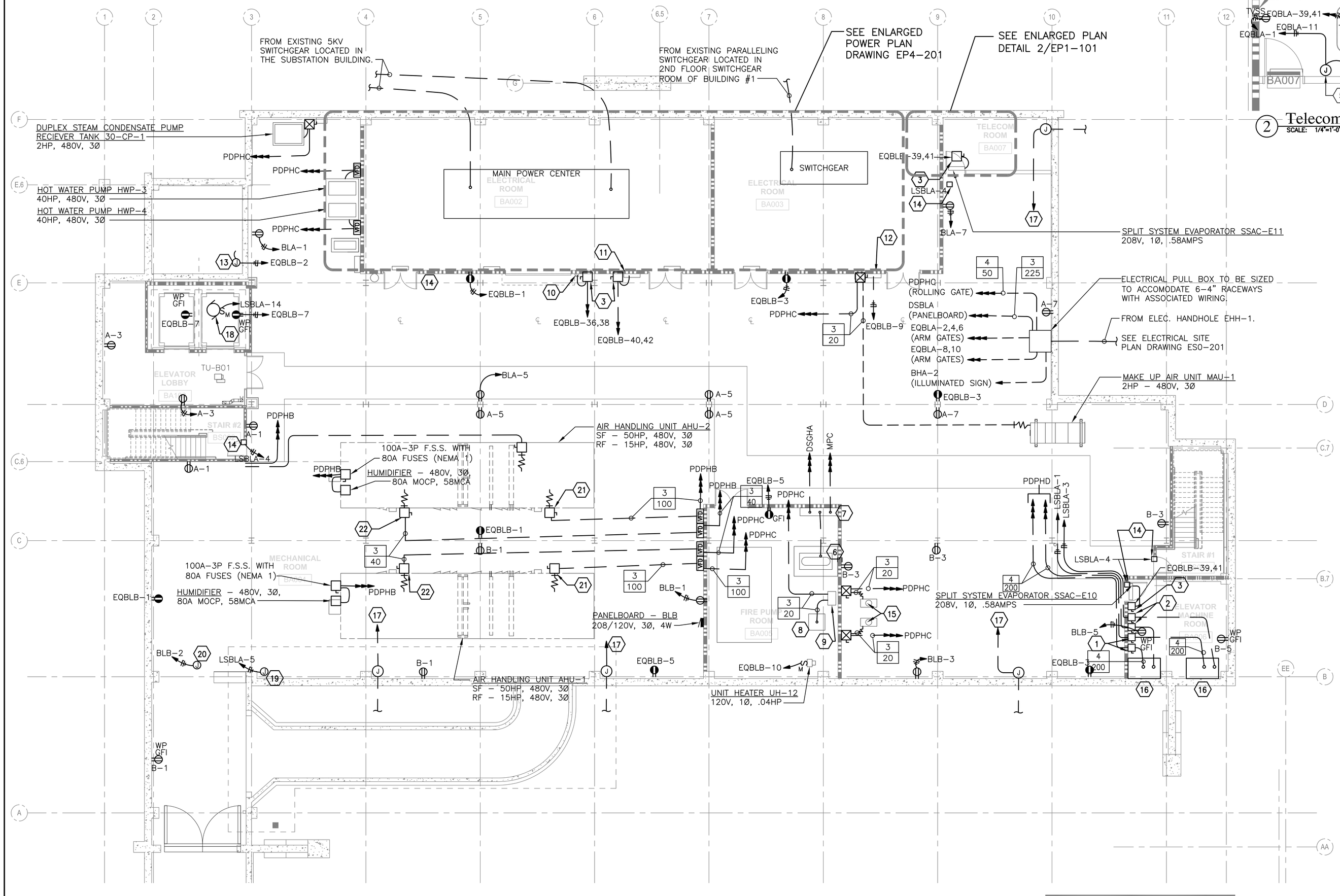

1 Power - Basement Plan
SCALE: 1/8"=1'-0"

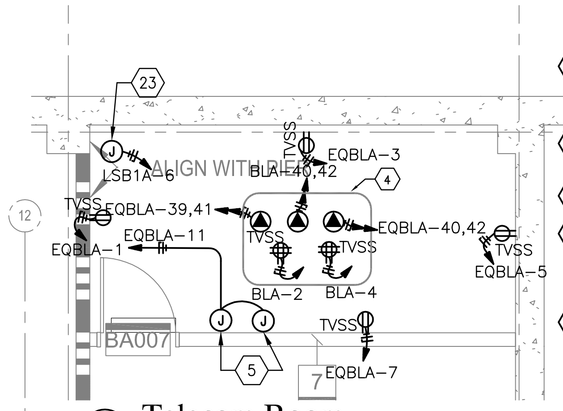

2 Telecom Room
SCALE: 1/4"=1'-0"

Key Notes

1. ELEVATOR POWER MODULE/FUSIBLE DISCONNECT SWITCH - 200A, 480V, 3Ø. BUSSMAN CAT#PS2-T48-R1-K-G-A-F3
2. 30A-2P SAFETY SWITCH - NEMA 1 (CAR LIGHTING & FAN).
3. 30A-2P SAFETY SWITCH - NEMA 1.
4. PROVIDE (3) L6-30R AND (2) 5-20R TVSS QUAD RECEPTACLES. RECEPTACLES TO BE MOUNTED ON BOTTOM OF CABLE TRAY OVER EQUIPMENT RACK.
5. OUTLET BOX WITH 120 VOLT, 20AMP CIRCUIT FOR SECURITY PANELS. COORDINATE J-BOX MOUNTING LOCATION WITH SECURITY CONTRACTOR PRIOR TO ROUGH-IN. (SECURITY SYSTEM BY OTHER CONTRACTOR)
6. FIRE PUMP - 100HP, 480V, 3Ø. SEE DRAWING EP5-201 FOR FEEDER REQUIREMENTS.
7. FIRE PUMP CONTROLLER (CONTROLLER FURNISHED UNDER DIVISION 21 10 00). FOR FEEDER REQUIREMENTS.
8. JOCKEY PUMP - 3HP, 480V, 3Ø
9. JOCKEY PUMP CONTROLLER (FURNISHED UNDER DIVISION 21 10 00)
10. REFRIGERANT CENTRALIZED CONTROLLER - 208V, 1Ø, 1AMP.
11. REFRIGERANT BRANCH CONTROLLER #2 - 208V, 1Ø, 15AMP.
12. ATC PANEL - 120V, 1Ø.
13. MOTORIZED DAMPER - 120V, 1Ø.
14. DOOR ACCESS CONTROLLER - 120V, 1Ø NE POWER.
15. DOMESTIC WATER BOOSTER PUMPS - 2 - 5 HP, 480V, 3Ø.
16. ELEVATOR CONTROLLER - 40HP, 480V, 3Ø.
17. 1" EMPTY UNDERGROUND EMERGENCY TELEPHONE POWER RACEWAY SERVING EMERGENCY PHONE SHALL BE EXTENDED TO PANELBOARD EQBLA. REFER TO DRAWING TS0-201 FOR EXTERIOR DUCT BANK LOCATION.
18. ELEVATOR SUMP PUMP - SP-1 2HP, 120V, 1Ø.
19. DRY PIPE VALVE 120V, 1Ø NE POWER.
20. HEAT TRACE 120V, 1Ø NE POWER.
21. 100A-3P FSS WITH FUSE SIZE AS DIRECTED BY EQUIPMENT MFR. PROVIDE AUX. CONTACTS IN SWITCH TO NOTIFY VFD UNIT THAT THE AHU MOTOR HAS BEEN DE-ENGERIZED. PROVIDE ALL CONTROL RACEWAY AND WIRING AS REQUIRED.
22. 60A-3P FSS WITH FUSE SIZE AS DIRECTED BY EQUIPMENT MFR. PROVIDE AUX. CONTACTS IN SWITCH TO NOTIFY VFD UNIT THAT THE AHU MOTOR HAS BEEN DE-ENGERIZED. PROVIDE ALL CONTROL RACEWAY AND WIRING AS REQUIRED.
23. SECURITY PANEL-120V-1Ø. VERIFY FINAL MOUNTING LOCATION WITH SECURITY CONTRACTOR PRIOR TO ROUGH-IN.

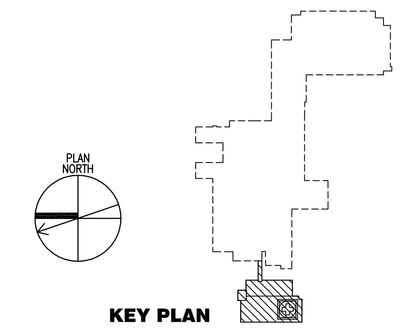

KEY PLAN

Drawing Notes

1. PROVIDE 120 VOLT POWER TO ALL VAV BOXES. BOXES SHALL BE SERVED ON 20AMP CIRCUITS AND GROUPED AS INDICATED BELOW:

TU-B01 CCT NO. EQBLB-1

FOR CONSTRUCTION
FULLY SPRINKLERED

Revisions:	Date

CONSULTANTS:

HDR Architecture, Inc.
1101 King Street | Suite 400 | Alexandria, Virginia 22314-2944 | 703.518.8500

ARCHITECT/ENGINEERS:

ARCHITECTURE ENGINEERING INTERIOR DESIGN DESIGN/BUILD
ASTORINO
227 Fort Pitt Boulevard Pittsburgh Pennsylvania 15222
TEL 412 765 1700 FAX 412 765 1711 www.astorino.com

Drawing Title	Power Basement Plan
Approved: Project Director	
Project Title	VA CARES CONSOLIDATION VAMC, PITTSBURGH, PA RESEARCH OFFICE BLDG.
Location	VAPHS UNIVERSITY DRIVE
Date	08-18-10
Checked	TMR
Drawn	LLG
Project Number	646CA2500R
Building Number	30
Drawing Number	EP1-101
Dwg. -- of --	

Office of Facilities Management
Department of Veterans Affairs

VA FORM 08-6231, OCT 1978

P:\Project_2005425.00\CAD\UNIVERSITY DRIVE\Research Office Building\Electrical\EP1-101.dwg SSTIROBEL 08/18/10 13:55:46

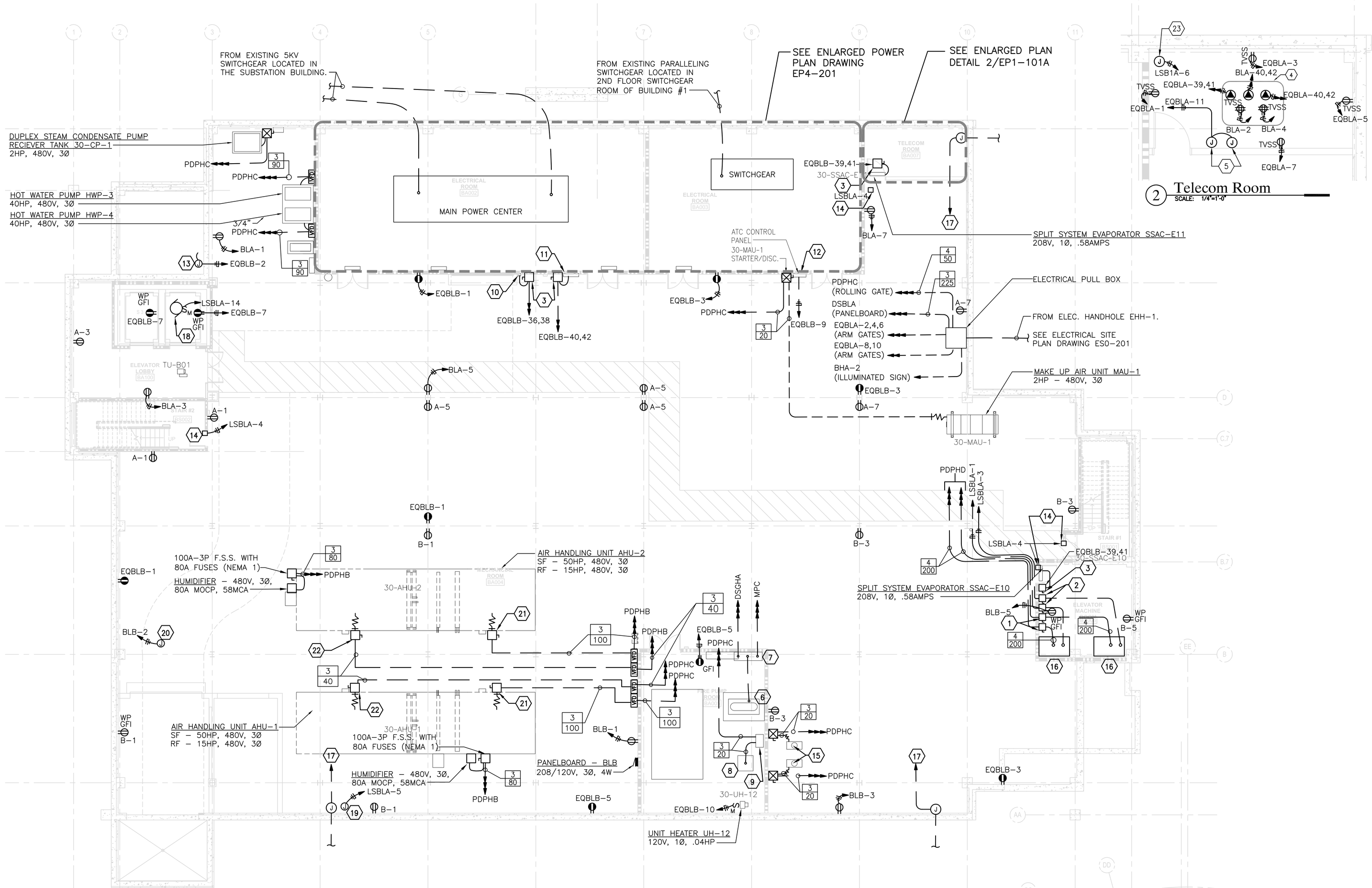

1 Power - Basement Plan - Alternate
SCALE: 1/8"=1'-0"

2 Telecom Room
SCALE: 1/4"=1'-0"

Key Notes

1. ELEVATOR POWER MODULE/FUSIBLE DISCONNECT SWITCH - 200A, 480V, 3Ø. BUSSMAN CAT#PS2-T48-R1-K-G-A-F3
2. 30A-2P SAFETY SWITCH - NEMA 1 (CAR LIGHTING & FAN).
3. 30A-2P SAFETY SWITCH - NEMA 1.
4. PROVIDE (3) L6-30R AND (2) 5-20R TVSS QUAD RECEPTACLES. RECEPTACLES TO BE MOUNTED ON BOTTOM OF CABLE TRAY OVER EQUIPMENT RACK.
5. OUTLET BOX WITH 120 VOLT, 20AMP CIRCUIT FOR SECURITY PANELS. COORDINATE J-BOX MOUNTING LOCATION WITH SECURITY CONTRACTOR PRIOR TO ROUGH-IN. (SECURITY SYSTEM BY OTHER CONTRACTOR)
6. FIRE PUMP - 100HP, 480V, 3Ø. SEE DRAWING EP5-201 FOR FEEDER REQUIREMENTS.
7. FIRE PUMP CONTROLLER (CONTROLLER FURNISHED UNDER DIVISION 21 10 00). FOR FEEDER REQUIREMENTS.
8. JOCKEY PUMP - 3HP, 480V, 3Ø
9. JOCKEY PUMP CONTROLLER (FURNISHED UNDER DIVISION 21 10 00)
10. REFRIGERANT CENTRALIZED CONTROLLER - 208V, 1Ø, 1AMP.
11. REFRIGERANT BRANCH CONTROLLER #2 - 208V, 1Ø, 15AMP.
12. ATC PANEL - 120V, 1Ø.
13. MOTORIZED DAMPER - 120V, 1Ø.
14. DOOR ACCESS CONTROLLER - 120V, 1Ø NE POWER.
15. DOMESTIC WATER BOOSTER PUMPS - 2 - 5 HP, 480V, 3Ø.
16. ELEVATOR CONTROLLER - 40HP, 480V, 3Ø.
17. 1" EMPTY UNDERGROUND EMERGENCY TELEPHONE POWER RACEWAY SERVING EMERGENCY PHONE SHALL BE EXTENDED TO PANELBOARD EQBLA. REFER TO DRAWING TS0-201 FOR EXTERIOR DUCT BANK LOCATION.
18. ELEVATOR SUMP PUMP - SP-1 2HP, 120V, 1Ø.
19. DRY PIPE VALVE 120V, 1Ø NE POWER.
20. HEAT TRACE 120V, 1Ø NE POWER.
21. 100A-3P FSS WITH FUSE SIZE AS DIRECTED BY EQUIPMENT MFR. PROVIDE AUX. CONTACTS IN SWITCH TO NOTIFY VFD UNIT THAT THE AHU MOTOR HAS BEEN DE-ENGERIZED. PROVIDE ALL CONTROL RACEWAY AND WIRING AS REQUIRED.
22. 60A-3P FSS WITH FUSE SIZE AS DIRECTED BY EQUIPMENT MFR. PROVIDE AUX. CONTACTS IN SWITCH TO NOTIFY VFD UNIT THAT THE AHU MOTOR HAS BEEN DE-ENGERIZED. PROVIDE ALL CONTROL RACEWAY AND WIRING AS REQUIRED.
23. SECURITY PANEL-120V-1Ø. VERIFY FINAL MOUNTING LOCATION WITH SECURITY CONTRACTOR PRIOR TO ROUGH-IN.

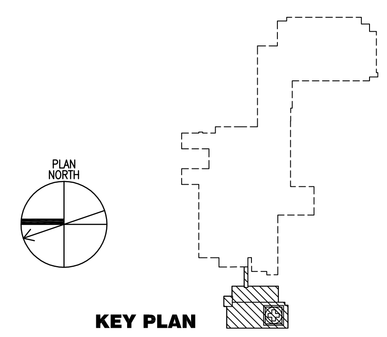

KEY PLAN

Drawing Notes

1. PROVIDE 120 VOLT POWER TO ALL VAV BOXES. BOXES SHALL BE SERVED ON 20AMP CIRCUITS AND GROUPED AS INDICATED BELOW:

TU-B01 CCT NO. EQBLB-1

FOR CONSTRUCTION
FULLY SPRINKLERED

CONSULTANTS:

HDR Architecture, Inc.
1101 King Street | Suite 400 | Alexandria, Virginia 22314-2944 | 703.518.8500

ARCHITECT/ENGINEERS:

ARCHITECTURE ENGINEERING INTERIOR DESIGN DESIGN/BUILD
ASTORINO
227 Fort Pitt Boulevard Pittsburgh Pennsylvania 15222
TEL 412 765 1700 FAX 412 765 1711 www.astorino.com

Revisions:	Date

Drawing Title: **Power Basement Plan - Alternate #1**

Approved: Project Director

Project Title: **VA CARES CONSOLIDATION VAMC, PITTSBURGH, PA RESEARCH OFFICE BLDG.**

Location: **VAPHS UNIVERSITY DRIVE**

Date: **08-18-10** | Checked: **TMR** | Drawn: **LLG**

Project Number: **646CA2500R**

Building Number: **30**

Drawing Number: **EP1-101A**
Dwg. -- of --

Office of Facilities Management
Department of Veterans Affairs

VA FORM 08-6231, OCT 1978

P:\Project\300545.00\CAD\UNIVERSITY DRIVE\Research Office Building\Electrical\EP1-101a.dwg SSTROBEL 08/18/10 - 13:55:05

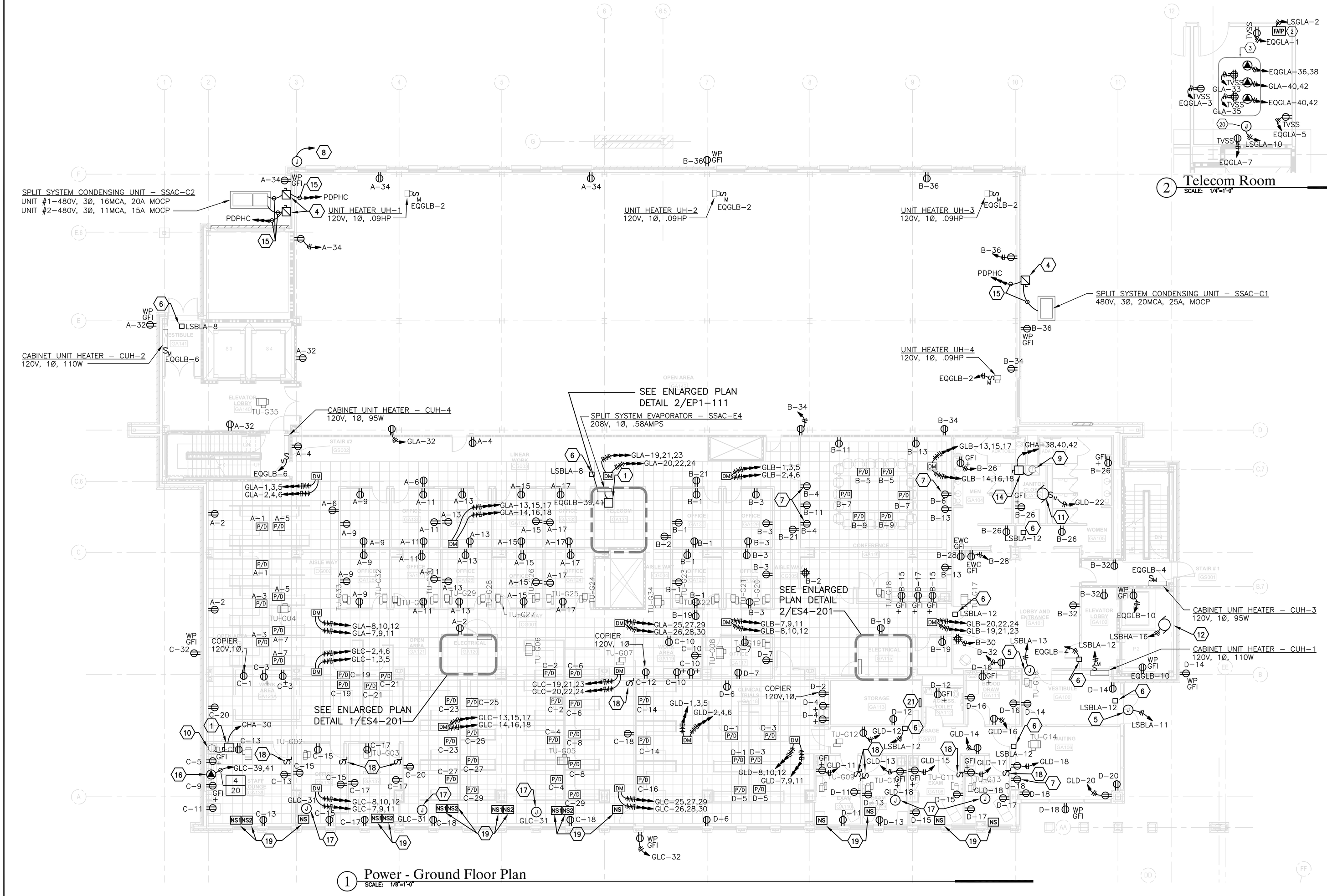

1 Power - Ground Floor Plan
SCALE: 1/8"=1'-0"

2 Telecom Room
SCALE: 1/4"=1'-0"

Key Notes

1. 30A–2P SAFETY SWITCH – NEMA 1.
2. FIRE ALARM CONTROL PANEL – 120V, 1Ø, NE.
3. PROVIDE (3) L6–30R AND (2) 5–20R TVSS QUAD RECEPTACLES. RECEPTACLES TO BE MOUNTED ON BOTTOM OF CABLE TRAY OVER EQUIPMENT RACK.
4. 30A–3P FSS WITH FUSE SIZE AS DIRECTED BY MFR – (NEMA 4X).
5. DOOR MOTOR OPERATOR – 120V, 1Ø, NE POWER.
6. DOOR ACCESS CONTROLLER – 120V, 1Ø, NE POWER.
7. WALL MOUNTED TV – 120V, 1Ø, COORDINATE MOUNTING HEIGHT OF OUTLET WITH ARCHITECTURAL DRAWINGS AND MOUNTING BRACKET CONFIGURATION.
8. WALL MOUNTED EMERGENCY PHONE. EXTEND A 3/4" EMPTY RACEWAY FROM PHONE TO PANELBOARD EQGLA.
9. WATER HEATER – EWH–1 24KW, 480V 3Ø.
10. WATER HEATER – EWH–2 6KW, 277V 1Ø.
11. CIRC. PUMP – RCP–1 39WATTS, 120V, 1Ø.
12. ELEVATOR SUMP PUMP – SP–1 2HP, 120V, 1Ø.
13. NOT USED
14. 60A–3P SAFETY SWITCH – NEMA 1.
15. 3 #10 + 1 #12 – 3/4"C.
16. COFFEE MAKER – 208/120V, 1Ø, 3KW.
17. JUNCTION BOX WITH 120V, 1Ø, 20AMP CIRCUIT TO SERVE SHADE MOTORS. REFER TO DRAWINGS EP7–105, EP7–106 & EP–107 FOR DETAILS. COORDINATE JUNCTION BOX MOUNTING LOCATION IN BULKHEAD WITH ACCESS PANEL.
18. SHADE CONTROL LOCAL SWITCH. OUTLET BOX, CONDUIT, WIRING & TERMINATIONS BY E.C. SWITCH BY GENERAL CONTRACTOR. REFER TO DRAWINGS EP7–105, EP7–106 & EP–107 FOR DETAILS.
19. SHADE NETWORK SPLITTER. CONDUIT, WIRING & TERMINATIONS BY E.C. SWITCH BY GENERAL CONTRACTOR. REFER TO DRAWINGS EP7–105, EP7–106 & EP–107 FOR DETAILS.
20. SECURITY PANEL–120V–1Ø. VERIFY FINAL MOUNTING LOCATION WITH SECURITY CONTRACTOR PRIOR TO ROUGH–IN.
21. NURSE CALL CABINET. 120V–1Ø NE LSBLA–7

Drawing Notes

1. PROVIDE 120 VOLT POWER TO ALL VAV BOXES. BOXES SHALL BE SERVED ON 20AMP CIRCUITS AND GROUPED AS INDICATED BELOW:

TU–G01 THRU TU–G08 CCT NO. EQGLB–1
TU–G09 THRU TU–G16 CCT NO. EQGLB–3
TU–G17 THRU TU–G25 CCT NO. EQGLB–5
TU–G26 THRU TU–G35 CCT NO. EQGLB–7

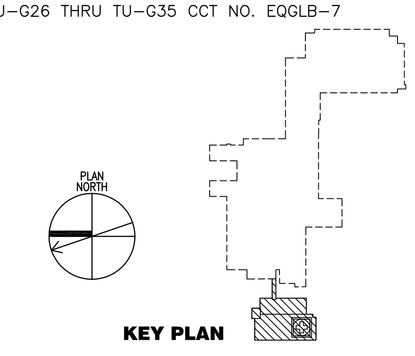

KEY PLAN

FOR CONSTRUCTION
FULLY SPRINKLERED

Revisions:	Date

CONSULTANTS:

HDR Architecture, Inc.
1101 King Street | Suite 400 | Alexandria, Virginia 22314-2944 | 703.518.8500

ARCHITECT/ENGINEERS:

ARCHITECTURE ENGINEERING INTERIOR DESIGN DESIGN/BUILD
ASTORINO
227 Fort Pitt Boulevard Pittsburgh Pennsylvania 15222
TEL 412 765 1700 FAX 412 765 1711 www.astorino.com

Drawing Title	Power Ground Floor Plan
Approved: Project Director	
Project Title	VA CARES CONSOLIDATION VAMC, PITTSBURGH, PA RESEARCH OFFICE BLDG.
Location	VAPHS UNIVERSITY DRIVE
Date	08-18-10
Checked	TMR
Drawn	LLG
Project Number	646CA2500R
Building Number	30
Drawing Number	EP1-111
Dwg. -- of --	

Office of Facilities Management
Department of Veterans Affairs

VA FORM 08-6231, OCT 1978

P:\Project\20054225.00\CAD\UNIVERSITY DRIVE\Research Office Building\Electrical\EP1-111.dwg SSTROBEL 08/18/10 , 13:54:27

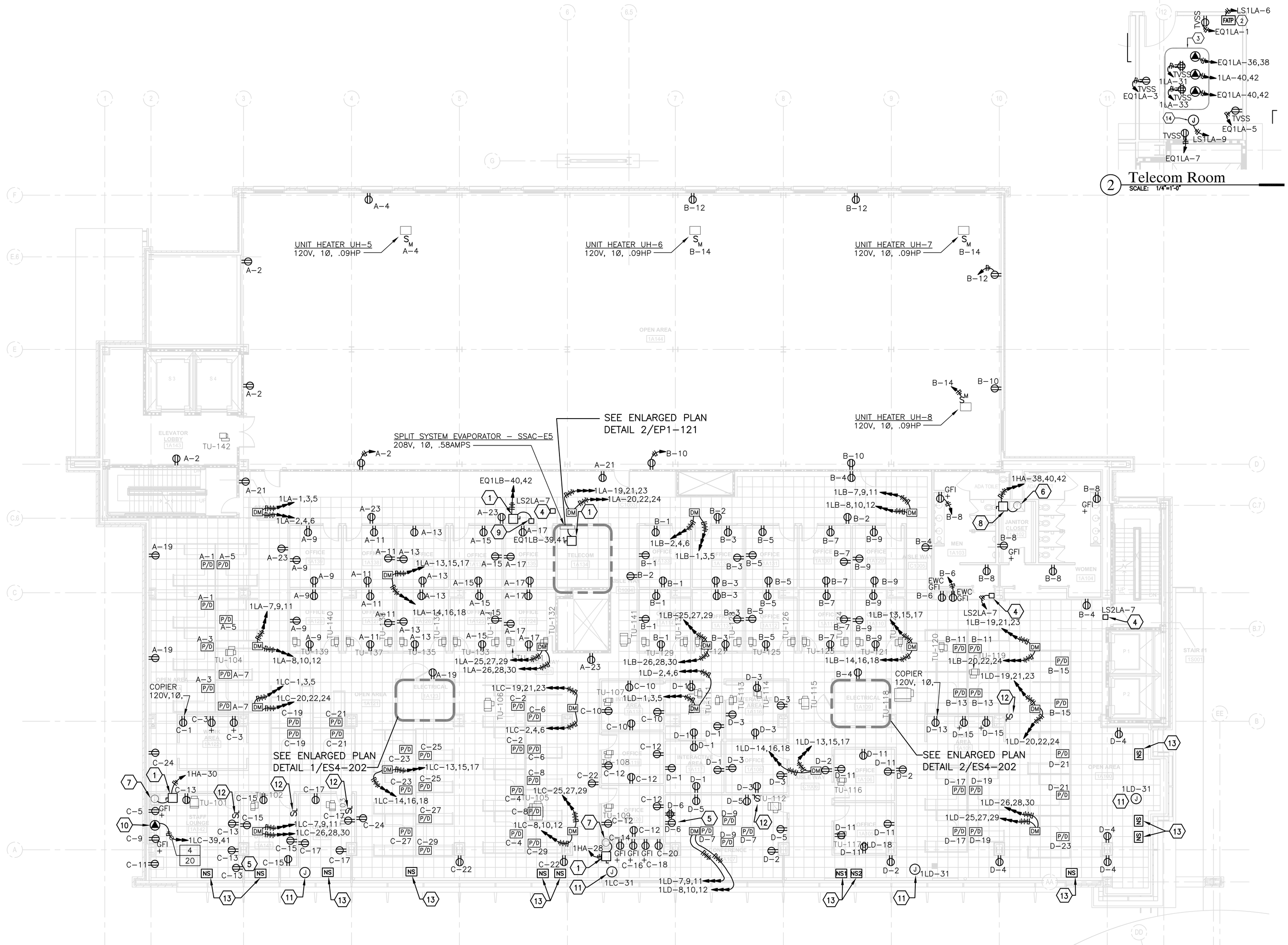

1 Power - 1st Floor Plan
SCALE: 1/8"=1'-0"

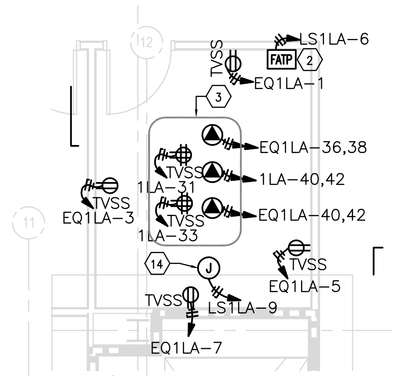

2 Telecom Room
SCALE: 1/4"=1'-0"

Key Notes

1. 30A–2P SAFETY SWITCH – NEMA 1.
2. FIRE ALARM TRANSPONDER PANEL – 120V, 1Ø NE.
3. PROVIDE (3) L6–30R AND (2) 5–20R TVSS QUAD RECEPTACLES. RECEPTACLES TO BE MOUNTED ON BOTTOM OF CABLE TRAY OVER EQUIPMENT RACK.
4. DOOR ACCESS CONTROLLER – 120V, 1Ø, NE POWER.
5. WALL MOUNTED TV – 120V, 1Ø, COORDINATE MOUNTING HEIGHT OF OUTLET WITH ARCHITECTURAL DRAWINGS AND MOUNTING BRACKET CONFIGURATION.
6. WATER HEATER – EWH–1 24KW, 480V, 3Ø.
7. WATER HEATER – EWH–2 6KW, 277V, 1Ø.
8. 60A–3P SAFETY SWITCH – NEMA 1
9. REFRIGERANT BRANCH CONTROLLER #1 LOCATED ABOVE CEILING 208V, 1Ø, 15AMPS.
10. COFFEE MAKER – 208/120V, 1Ø, 3KW.
11. JUNCTION BOX WITH 120V, 1Ø, 20AMP CIRCUIT TO SERVE SHADE MOTORS. REFER TO DRAWINGS EP7–105, EP7–106 & EP–107 FOR DETAILS. COORDINATE JUNCTION BOX MOUNTING LOCATION IN BULKHEAD WITH ACCESS PANEL.
12. SHADE CONTROL LOCAL SWITCH. OUTLET BOX, CONDUIT, WIRING & TERMINATIONS BY E.C. SWITCH BY GENERAL CONTRACTOR. REFER TO DRAWINGS EP7–105, EP7–106 & EP–107 FOR DETAILS.
13. SHADE NETWORK SPLITTER. CONDUIT, WIRING & TERMINATIONS BY E.C. SWITCH BY GENERAL CONTRACTOR. REFER TO DRAWINGS EP7–105, EP7–106 & EP–107 FOR DETAILS.
14. SECURITY PANEL–120V–1Ø. VERIFY FINAL MOUNTING LOCATION WITH SECURITY CONTRACTOR PRIOR TO ROUGH–IN.

Drawing Notes

1. PROVIDE 120 VOLT POWER TO ALL VAV BOXES. BOXES SHALL BE SERVED ON 20AMP CIRCUITS AND GROUPED AS INDICATED BELOW:

TU–101 THRU TU–110 CCT NO. EQ1LB–1
TU–111 THRU TU–120 CCT NO. EQ1LB–3
TU–121 THRU TU–131 CCT NO. EQ1LB–5
TU–132 THRU TU–142 CCT NO. EQ1LB–7

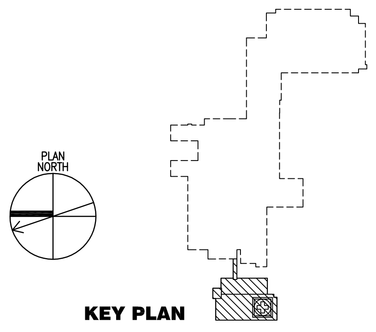

FOR CONSTRUCTION
FULLY SPRINKLERED

Revisions:	Date

CONSULTANTS:

HDR Architecture, Inc.
1101 King Street | Suite 400 | Alexandria, Virginia 22314-2944 | 703.518.8500

ARCHITECT/ENGINEERS:

ARCHITECTURE ENGINEERING INTERIOR DESIGN DESIGN/BUILD
ASTORINO
227 Fort Pitt Boulevard Pittsburgh Pennsylvania 15222
TEL 412 765 1700 FAX 412 765 1711 www.astorino.com

Drawing Title: **Power 1st Floor Plan**
Approved: Project Director

Project Title: **VA CARES CONSOLIDATION VAMC, PITTSBURGH, PA RESEARCH OFFICE BLDG.**
Location: **VAPHS UNIVERSITY DRIVE**
Date: **08-18-10** | Checked: **TMR** | Drawn: **LLG**

Project Number: **646CA2500R**
Building Number: **30**
Drawing Number: **EP1-121**
Dwg. -- of --

Office of Facilities Management
Department of Veterans Affairs

VA FORM 08-6231, OCT 1978

P:\Project\20054250\CAD\UNIVERSITY DRIVE\Research Office Building\Electrical\EP1-121.dwg SSTRO8EL 08/18/10 - 13:53:35

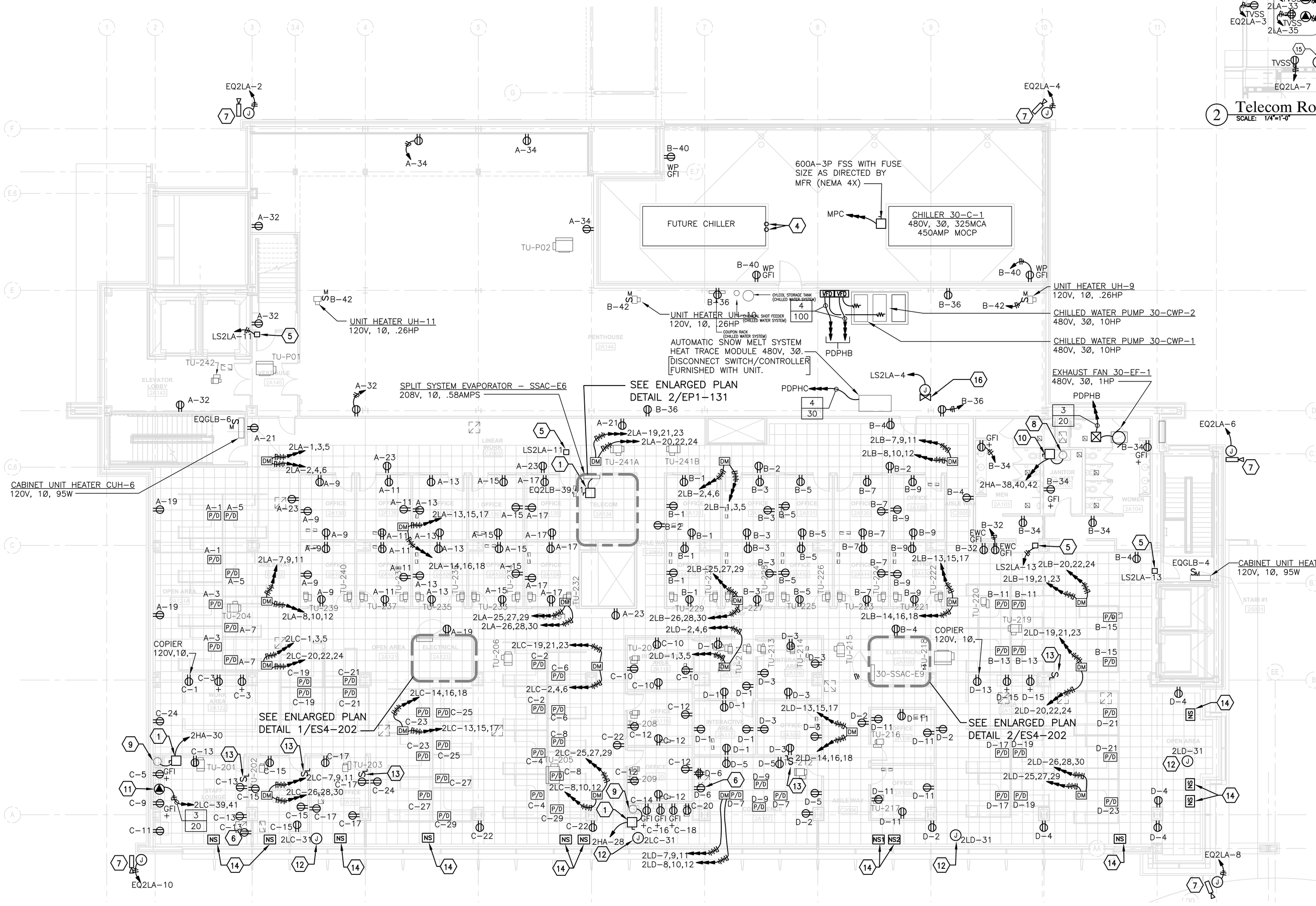

1 Power - 2nd Floor Plan
SCALE: 1/8"=1'-0"

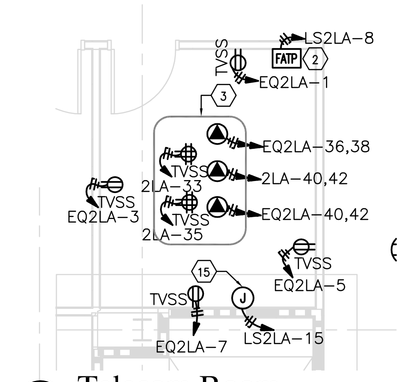

2 Telecom Room
SCALE: 1/4"=1'-0"

Key Notes

1. 30A-2P SAFETY SWITCH - NEMA 1.
2. FIRE ALARM TRANSPONDER PANEL - 120V, 1Ø NE.
3. PROVIDE (3) L6-30R AND (2) 5-20R TVSS QUAD RECEPTACLES. RECEPTACLES TO BE MOUNTED ON BOTTOM OF CABLE TRAY OVER EQUIPMENT RACK.
4. PROVIDE 2-2 1/2" EMPTY CIRCUITS WITH DRAG WIRES FROM MAIN POWER CENTER TO FUTURE CHILLER. CAP CONDUITS ABOVE ROOF FOR FUTURE USE.
5. DOOR ACCESS CONTROLLER - 120V, 1Ø, NE POWER.
6. WALL MOUNTED TV - 120V, 1Ø, COORDINATE MOUNTING HEIGHT OF OUTLET WITH ARCHITECTURAL DRAWINGS AND MOUNTING BRACKET CONFIGURATION.
7. EXTERIOR SECURITY CAMERA HEATER & BLOWER - 120V, 1Ø. VERIFY EXACT MOUNTING LOCATION PRIOR TO ROUGH-IN. SECURITY EQUIPMENT BY OTHER CONTRACTOR.
8. WATER HEATER - EWH-1 - 24KW, 480V, 3Ø.
9. WATER HEATER - EWH-2 - 6KW, 277V, 1Ø.
10. 60A-3P SAFETY SWITCH - NEMA 1
11. COFFEE MAKER - 208/120V, 1Ø, 3KW.
12. JUNCTION BOX WITH 120V, 1Ø, 20AMP CIRCUIT TO SERVE SHADE MOTORS. REFER TO DRAWINGS EP7-105, EP7-106 & EP-107 FOR DETAILS. COORDINATE JUNCTION BOX MOUNTING LOCATION IN BULKHEAD WITH ACCESS PANEL.
13. SHADE CONTROL LOCAL SWITCH. OUTLET BOX, CONDUIT, WIRING & TERMINATIONS BY E.C. SWITCH BY GENERAL CONTRACTOR. REFER TO DRAWINGS EP7-105, EP7-106 & EP-107 FOR DETAILS.
14. SHADE NETWORK SPLITTER. CONDUIT, WIRING & TERMINATIONS BY E.C. SWITCH BY GENERAL CONTRACTOR. REFER TO DRAWINGS EP7-105, EP7-106 & EP-107 FOR DETAILS.
15. SECURITY PANEL-120V-1Ø. VERIFY FINAL MOUNTING LOCATION WITH SECURITY CONTRACTOR PRIOR TO ROUGH-IN.
16. DELUGE VALVE AND CONTROL PANEL. 120V, 1Ø, NE POWER.

Drawing Notes

1. PROVIDE 120 VOLT POWER TO ALL VAV BOXES. BOXES SHALL BE SERVED ON 20AMP CIRCUITS AND GROUPED AS INDICATED BELOW:

TU-201 THRU TU-210 CCT NO. EQ2LB-1
TU-211 THRU TU-220 CCT NO. EQ2LB-3
TU-221 THRU TU-231 CCT NO. EQ2LB-5
TU-232 THRU TU-242 CCT NO. EQ2LB-7

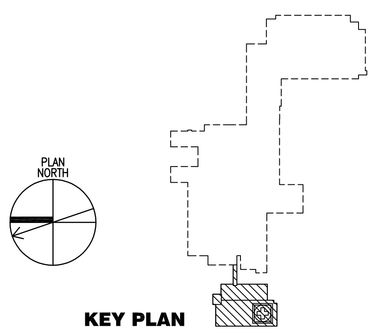

FOR CONSTRUCTION
FULLY SPRINKLERED

Revisions:	Date

CONSULTANTS:

HDR

HDR Architecture, Inc.

1101 King Street | Suite 400 | Alexandria, Virginia 22314-2944 | 703.518.8500

ARCHITECT/ENGINEERS:

ARCHITECTURE ENGINEERING INTERIOR DESIGN DESIGN/BUILD
ASTORINO
227 Fort Pitt Boulevard Pittsburgh Pennsylvania 15222
TEL 412 765 1700 FAX 412 765 1711 www.astorino.com

Drawing Title: **Power 2nd Floor Plan**

Approved: Project Director

Project Title: **VA CARES CONSOLIDATION VAMC, PITTSBURGH, PA RESEARCH OFFICE BLDG.**

Location: **VAPHS UNIVERSITY DRIVE**

Date: **08-18-10** | Checked: **TMR** | Drawn: **LLG**

Project Number: **646CA2500R**

Building Number: **30**

Drawing Number: **EP1-131**

Dwg. -- of --

Office of Facilities Management

Department of Veterans Affairs

VA FORM 08-6231, OCT 1978

P:\Project\20050425.00\CAD\UNIVERSITY DRIVE\Research Office Building\Electrical\EP1-131.dwg LGARDNER 11/20/09 : 13:48:53

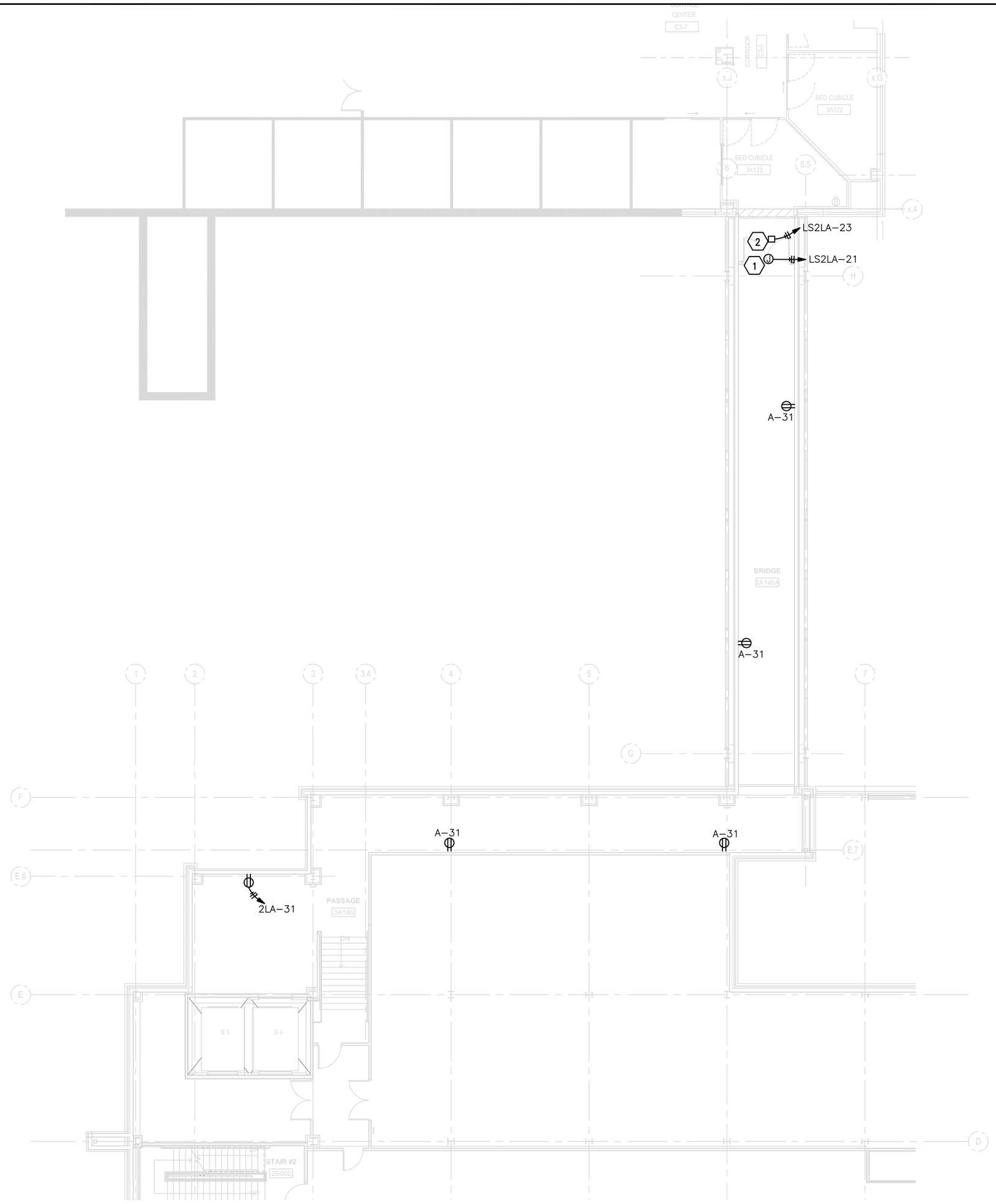

1 Power - Bridge Plan
SCALE: 1/8"=1'-0"

Key Notes

1. DOOR MOTOR OPERATOR. 120V–1Ø. NE POWER
2. DOOR ACCESS CONTROLLER. 120V–1Ø. NE POWER

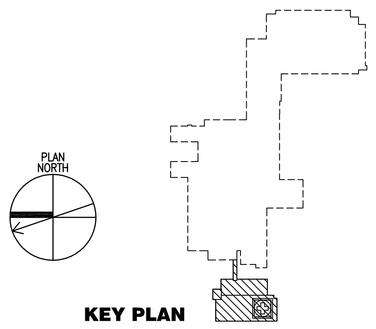

KEY PLAN

FOR CONSTRUCTION
FULLY SPRINKLERED

Revisions:	Date

CONSULTANTS:

HDR

HDR Architecture, Inc.

1101 King Street | Suite 400 | Alexandria, Virginia 22314-2944 | 703.518.8500

ARCHITECT/ENGINEERS:

ARCHITECTURE ENGINEERING INTERIOR DESIGN DESIGN/BUILD

ASTORINO

227 Fort Pitt Boulevard Pittsburgh Pennsylvania 15222
TEL 412 765 1700 FAX 412 765 1711 www.astorino.com

Drawing Title: **Power Bridge Plan**

Approved: Project Director

Project Title: **VA CARES CONSOLIDATION VAMC, PITTSBURGH, PA RESEARCH OFFICE BLDG.**

Location: **VAPHS UNIVERSITY DRIVE**

Date: **08-18-10** | Checked: **TMR** | Drawn: **LLG**

Project Number: **646CA2500R**

Building Number: **30**

Drawing Number: **EP1-132**

Dwg. -- of --

Office of Facilities Management

Department of Veterans Affairs

VA FORM 08-6231, OCT 1978

P:\Project\200542500\CAD\UNIVERSITY DRIVE\Research Office Building\Electrical\EP1-132.dwg LGARDNER 09/28/09 : 13:32:24

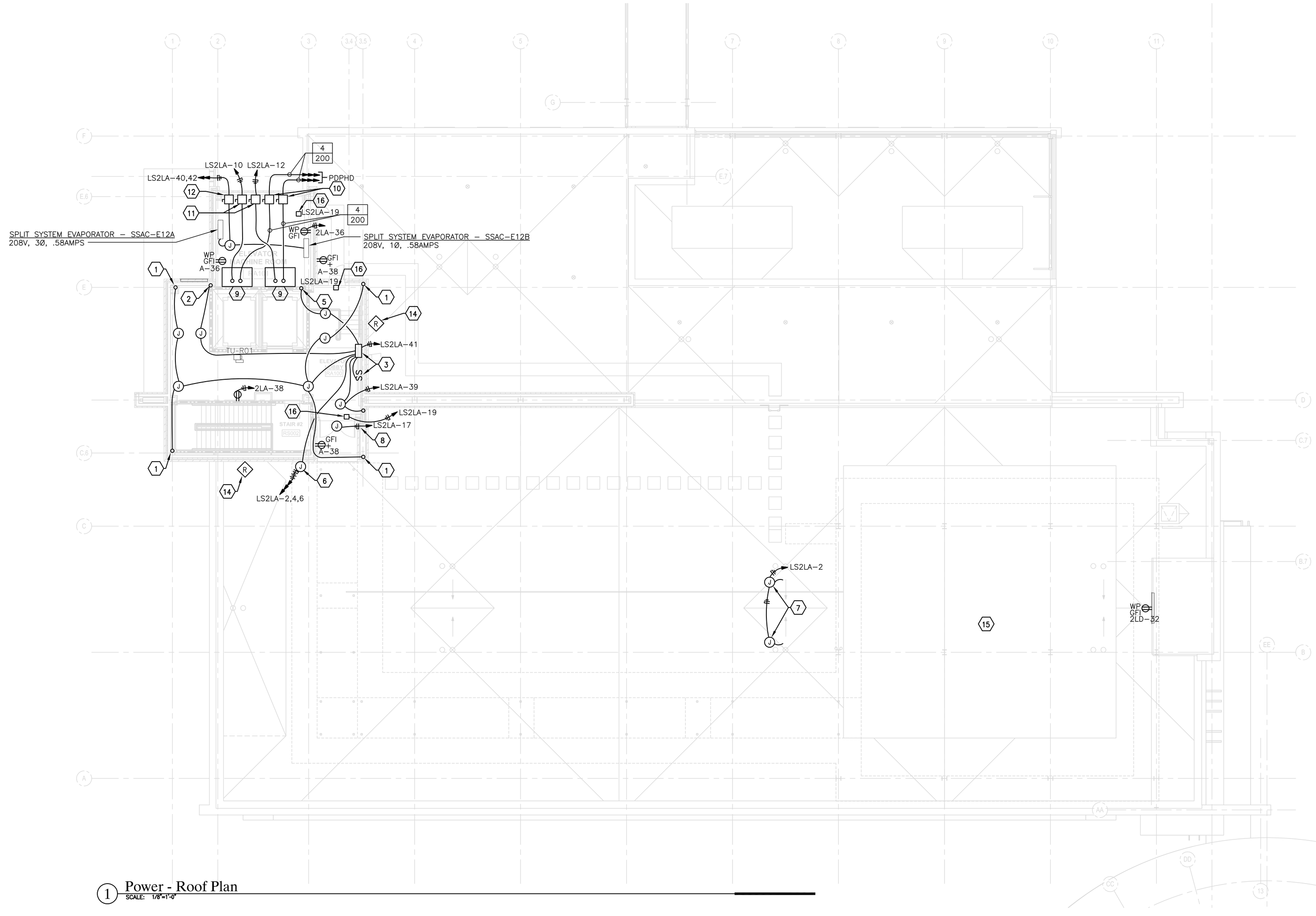

1 Power - Roof Plan
SCALE: 1/8"=1'-0"

Key Notes

1. OBSTRUCTION LIGHT, EXTEND 1/2" RIGID CONDUIT WITH WIRING UP THROUGH ROOF AND SECURE TO PARAPET WALL. REFER TO OBSTRUCTION LIGHT MOUNTING DETAILS ON THE HELIPAD DESIGN DRAWINGS, SHEETS E–1 & E–2.
2. WIND CONE, EXTEND 3/4" RIGID CONDUIT WITH WIRING UP THROUGH ROOF. REFER TO WIND CONE MOUNTING DETAILS ON THE HELIPAD DESIGN DRAWINGS, SHEETS E–1 & E–2.
3. RADIO OPERATED LIGHTING CONTROLLER. REFER TO ROLC WIRING DIAGRAM FOR ALL RACEWAY & SWITCHES REQUIRED FOR THIS SYSTEM. SEE HELIPAD DESIGN DRAWINGS, SHEETS E–1 & E–2.
4. ROTATING BEACON, EXTEND RACEWAY & WIRING UP TO ROTATING BEACON. SEE HELIPAD DESIGN DRAWINGS, SHEETS E–1 & E–2.
5. ANTENNA, EXTEND 3/4" RIGID CONDUIT UP THROUGH ROOF AND SECURE AS REQUIRED. REFER TO ROLC ANTENNA MOUNTING DETAIL ON HELIPAD DESIGN DRAWINGS, SHEETS E–1 & E–2.
6. J–BOX FOR LIGHTING SHALL BE WALL MOUNTED BELOW PLATFORM. FURNISH AND INSTALL ALL RACEWAY AND WIRING AS INDICATED ON THE HELIPAD DESIGN DRAWINGS, SHEETS E–1 & E–2.
7. FUEL/WATER SEPARATOR – 120V, 1Ø NE.
8. DOOR MOTOR OPERATOR – 120V, 1Ø, NE POWER.
9. ELEVATOR CONTROLLER – 60HP, 480, 3Ø.
10. ELEVATOR POWER MODULE/FUSIBLE DISCONNECT SWITCH – 200A, 480V, 3Ø. BUSSMAN CAT # PS2–T48–R1–K–G–A–F3.
11. 30A–2P SAFETY SWITCH – NEMA 1. (CAR LIGHTING & FAN)
12. 30A–2P SAFETY SWITCH – NEMA 1.
13. DOOR ACCESS CONTROLLER – 120V, 1Ø, NE POWER.
14. SHADE RADIOMETER. OUTLET BOX, CONDUIT, WIRING AND TERMINATIONS BY E.C. RADIOMETER BY GENERAL CONTRACTOR. REFER TO DRAWINGS EP7–105, EP7–106 & EP7–107 FOR DETAILS. VERIFY EXACT MOUNTING LOCATION OF RADIOMETER WITH SYSTEM INSTALLER PRIOR TO ROUGH–IN.
15. CONTRACTOR TO COORDINATE HELIPAD LIGHTNING PROTECTION SYSTEM GROUNDING REQUIREMENTS WITH THE HELIPAD CONTRACTOR.
16. DOOR ACCESS CONTROLLER. 120V–1Ø–NE POWER.

Drawing Notes

1. PROVIDE 120 VOLT POWER TO ALL VAV BOXES. BOXES SHALL BE SERVED ON 20AMP CIRCUITS AND GROUPED AS INDICATED BELOW:
   TU–R01 CCT NO. EQ2LB–9
2. ALL RACEWAYS PENETRATING THE ROOF SERVING LIGHTING, WIND CONE AND ANTENNA SYSTEM SHALL BE BONDED TO THE LIGHTNING PROTECTION SYSTEM

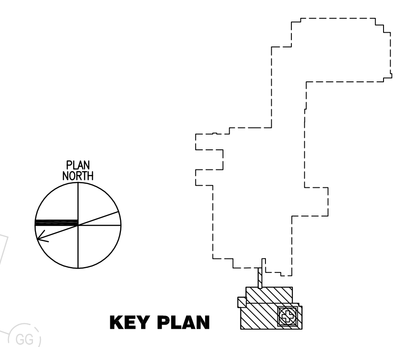

KEY PLAN

FOR CONSTRUCTION
FULLY SPRINKLERED

Revisions:	Date

CONSULTANTS:

HDR Architecture, Inc.
1101 King Street | Suite 400 | Alexandria, Virginia 22314-2944 | 703.518.8500

ARCHITECT/ENGINEERS:

ARCHITECTURE ENGINEERING INTERIOR DESIGN DESIGN/BUILD
ASTORINO
327 Fort Pitt Boulevard Pittsburgh Pennsylvania 15222
TEL 412 765 1700 FAX 412 765 1711 www.astorino.com

Drawing Title: **Power Roof Plan**

Approved: Project Director

Project Title: **VA CARES CONSOLIDATION VAMC, PITTSBURGH, PA RESEARCH OFFICE BLDG.**

Location: **VAPHS UNIVERSITY DRIVE**

Date: **08-18-10** | Checked: **TMR** | Drawn: **LLG**

Project Number: **646CA2500R**
Building Number: **30**
Drawing Number: **EP1-141**
Dwg. -- of --

Office of Facilities Management
Department of Veterans Affairs

VA FORM 08–6231, OCT 1978

P:\Project\200545250\CAD\UNIVERSITY DRIVE\Research Office Building\Electrical\EP1-141.dwg SSTROBEL 08/18/10 ; 14:01:56

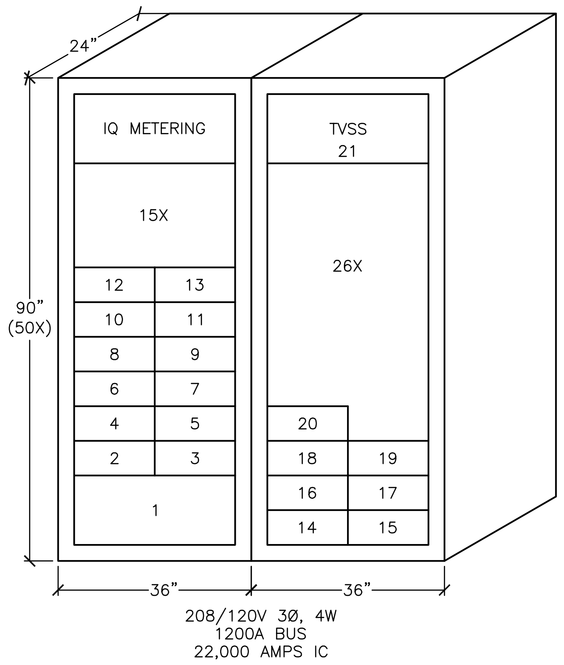

POSITION	CIRCUIT BREAKER SIZE	EQUIPMENT SERVIED	CONNECTED LOAD–KVA	DEMAND LOAD–KVA
1	1200A–3P	MCB	---	
2	100A–3P	PANELBOARD–BLA	6.68	4.3
3	100A–3P	PANELBOARD–BLB	2.40	1.5
4	225A–3P	PANELBOARD–GLA	21.6	14.0
5	225A–3P	PANELBOARD–GLB	18.8	12.2
6	225A–3P	PANELBOARD–GLC	29.8	19.4
7	225A–3P	PANELBOARD–GLD	16.5	10.7
8	225A–3P	PANELBOARD–1LA	20.6	13.4
9	225A–3P	PANELBOARD–1LB	14.6	9.5
10	225A–3P	PANELBOARD–1LC	36.0	23.4
11	225A–3P	PANELBOARD–1LD	17.6	11.4
12	225A–3P	PANELBOARD–2LA	24.4	15.8
13	225A–3P	PANELBOARD–2LB	15.2	9.8
14	225A–3P	PANELBOARD–2LC	34.6	22.5
15	225A–3P	PANELBOARD–2LD	17.6	11.4
16	225A–3P	SPARE	---	---
17	225A–3P	SPARE	---	---
18	150A–3P	SPARE	---	---
19	100A–3P	SPARE	---	---
20	100A–2P	PANELBOARD "GUARD BOOTH"	5.0	3.2
21		TVSS		
		TOTAL	281.38	182.50

1 Distribution Switchboard - DSBLA
SCALE: 3/4" = 1'-0"
(NORMAL)

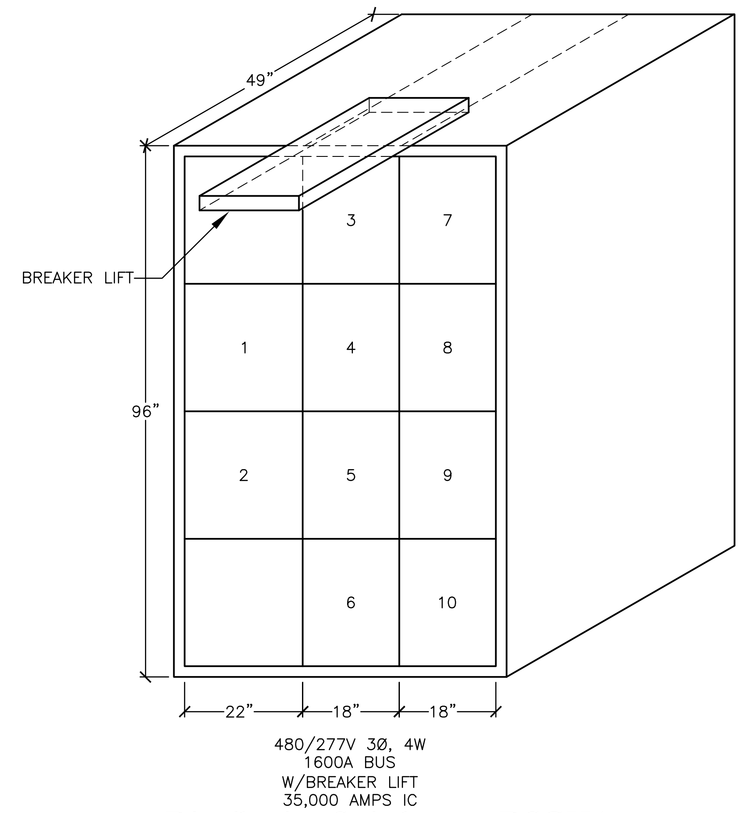

POSITION	CIRCUIT BREAKER SIZE	EQUIPMENT SERVIED	CONNECTED LOAD–KVA	DEMAND LOAD–KVA
1	---	METER (CH–IQ DP–4000)	---	---
2	1000A–3P	MCB	---	---
3	400A–3P	ATS – ELEV.	205.60	174.80
4	600A–3P	ATS – EQ	321.04	273.10
5	400A–3P	SPARE	---	---
6		PROVISIONS	---	---
7	400A–3P	ATS – LS	57.06	57.06
8	350A–3P	FIRE PUMP CONTROLLER	98.80	98.80
9	225A–3P	SPARE	---	---
10		PROVISIONS	---	---
		TOTAL	682.50	603.76

2 Distribution Switchgear - DSGHA
SCALE: 3/4" = 1'-0"
(EMERGENCY ONLY)

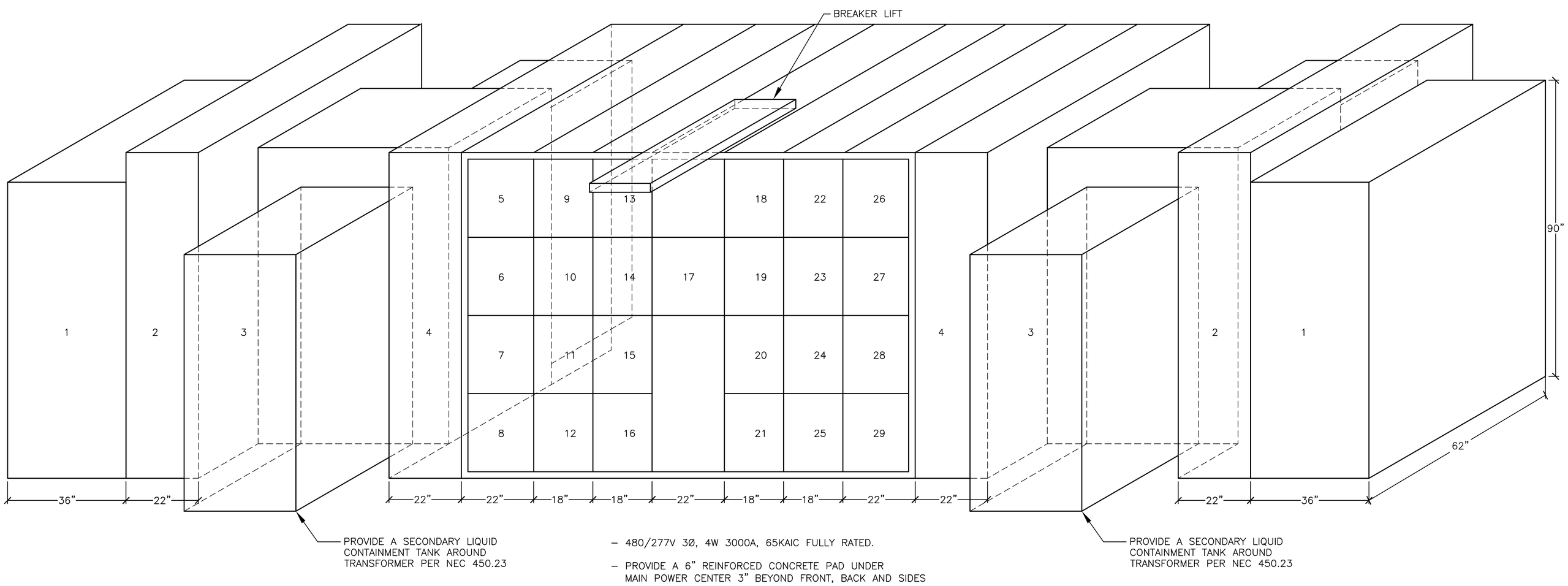

– 480/277V 3Ø, 4W 3000A, 65KAIC FULLY RATED.

– PROVIDE A 6" REINFORCED CONCRETE PAD UNDER MAIN POWER CENTER 3" BEYOND FRONT, BACK AND SIDES

– PROVIDE GROUND FAULT ON MAIN AND FEEDER BREAKERS.

– PROVIDE SINGLE PHASE PROTECTION ON MAIN CIRCUIT BREAKKERS.

POSITION	CIRCUIT BREAKER SIZE	EQUIPMENT SERVIED	CONNECTED LOAD–KVA	DEMAND LOAD–KVA
1	---	600A, 5KV LOAD BREAK SWITCH WITH 400A, E–RATED MEDIUM VOLTAGE FUSES	---	---
2	---	TRANSITION STRUCTURE	---	---
3	---	2000KVA SILICON TYPE TRANSFORMER, PRI:4160V, 3Ø SEC:480/277V, 3Ø, 4W, 5.75% IMPEDANCE	---	---
4	---	TRANSITION STRUCTURE	---	---
5	---	MAIN METERING	---	---
6	3000A–3P	MAIN CIRCUIT BREAKER	---	---
7	1600A–3P	PROVISION	---	---
8	---	TVSS (200KA)	---	---
9	600A–3P	DISTRIBUTION BOARD – PDPHA	170.7	170.7
10	450A–3P	CHILLER	270	---
11	600A–3P	DISTRIBUTION SB DSBLA–VIA T–1	281.38	182.5
12	1600A3P	PROVISION	---	---
13	400A–3P	ATS – LS	57.06	57.06
14	600A–3P	ATS – EQ	321.04	273.1
15	800A–3P	FUTURE WET LAB	380.2	---
16	1000A–3P	SPARE	---	---
17	3000A–4P	TIE CIRCUIT BREAKER (4–POLE)	---	---
18	600A–3P	DISTRIBUTION BOARD – PDPHB	204.6	173.9
19	450A–3P	FUTURE CHILLER	270	
20	400A–3P	ATS – ELEV	205.6	174.8
21	600A–3P	SPARE	---	---
22	800A–3P	FIRE PUMP CONTROLLER	98.8	98.8
23	600A–3P	FUTURE ANIMAL LAB	123	---
24	600A–3P	SPARE	---	---
25	1600A–3P	PROVISION	---	---
26	---	MAIN METERING	---	---
27	3000A–3P	MAIN CIRCUIT BREAKER	---	---
28	1600A–3P	PROVISION	---	---
29	---	TVSS (200KA)	---	---
		TOTAL	2382.38	1130.86

3 Main Power Center
SCALE: 3/4" = 1'-0"

FOR CONSTRUCTION
FULLY SPRINKLERED

Revisions:	Date

CONSULTANTS:

HDR Architecture, Inc.
1101 King Street | Suite 400 | Alexandria, Virginia 22314-2944 | 703.518.8500

ARCHITECT/ENGINEERS:

ARCHITECTURE ENGINEERING INTERIOR DESIGN DESIGN/BUILD
ASTORINO
227 Fort Pitt Boulevard Pittsburgh Pennsylvania 15222
TEL 412 765 1700 FAX 412 765 1711 www.astorino.com

Drawing Title: **Panel Elevations**

Approved: Project Director

Project Title: **VA CARES CONSOLIDATION VAMC, PITTSBURGH, PA RESEARCH OFFICE BLDG.**

Location: **VAPHS UNIVERSITY DRIVE**

Date | Checked: **TMR** | Drawn: **LLG**

Project Number: **646CA2500R**

Building Number: **30**

Drawing Number: **EP2-201**

Dwg. of

Office of Facilities Management

Department of Veterans Affairs

VA FORM 08–6231, OCT 1978

P:\Project\200542500\CAD\UNIVERSITY DRIVE\Research Office Building\Electrical\EP2-201.dwg LGARDNER 11/03/09 - 13:35:60

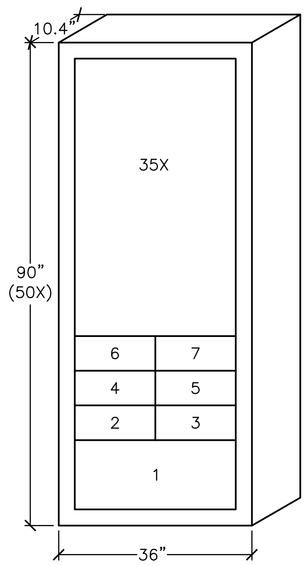

480/277V 3Ø, 4W
600A BUS
35,000 AMPS IC

POSITION	CIRCUIT BREAKER SIZE	EQUIPMENT SERVIED	CONNECTED LOAD–KVA	DEMAND LOAD–KVA
1	600A–3P	MCB	---	---
2	150A–3P	PANELBOARD – BHA	5.98	5.98
3	150A–3P	PANELBOARD – GHA	50.54	50.54
4	150A–3P	PANELBOARD – 1HA	56.31	56.31
5	150A–3P	PANELBOARD – 2HA	57.87	57.87
6	225A–3P	SPARE	---	---
7	100A–3P	SPARE	---	---
		TOTAL	170.70	170.70

1 Power Distribution Panelboard - PDPHA
SCALE: 3/4" = 1'-0" (NORMAL)

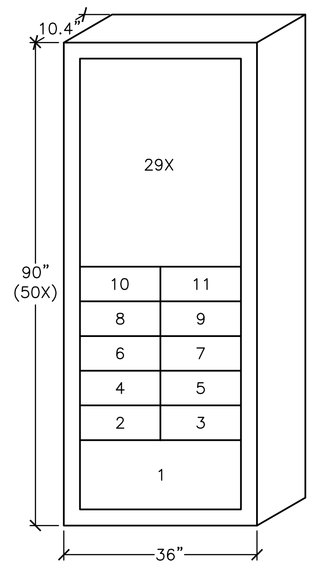

480/277V 3Ø, 4W
600A BUS
35,000 AMPS IC

POSITION	CIRCUIT BREAKER SIZE	EQUIPMENT SERVIED	CONNECTED LOAD–KVA	DEMAND LOAD–KVA
1	600A–3P	MCB	---	---
2	100A–3P	AHU – (SF)	51.8	44.0
3	100A–3P	SPARE	---	---
4	100A–3P	SPARE	---	---
5	80A–3P	HUMIDIFIER	48.2	41.0
6	80A–3P	HUMIDIFIER	48.2	41.0
7	30A–3P	CWP	16.7	14.2
8	30A–3P	CWP	16.7	14.2
9	70A–3P	SPARE	---	---
10	60A–3P	AHU – (RF)	21.5	18.3
11	60A–3P	SPARE	---	---
12	50A–3P	SPARE	---	---
13	20A–3P	EXHAUST FAN	1.5	1.2
		TOTAL	204.60	173.90

2 Power Distribution Panelboard - PDPHB
SCALE: 3/4" = 1'-0" (EQUIPMENT NORMAL)

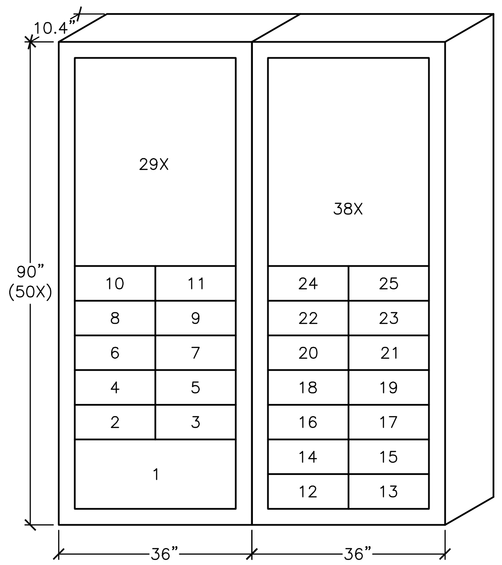

480/277V 3Ø, 4W
600A BUS
35,000 AMPS IC

POSITION	CIRCUIT BREAKER SIZE	EQUIPMENT SERVIED	CONNECTED LOAD–KVA	DEMAND LOAD–KVA
1	600A–3P	MCB	---	---
2	125A–3P	T–3	64.4	54.7
3	125A–3P	T–4	30.2	25.7
4	100A–3P	AHU – 1(SF)	51.8	44
5	100A–3P	SPARE	---	---
6	100A–3P	SPARE	---	---
7	90A–3P	HWP #3	41.4	35.2
8	90A–3P	HWP #4	41.4	35.2
9	60A–3P	SPARE	---	---
10	40A–3P	AHU – 1(RF)	21.5	18.3
11	50A–3P	SPARE	---	---
12	30A–3P	SPLIT COND. UNIT SSAC–C1	16.6	14.1
13	30A–3P	SPLIT COND. UNIT SSAC–C2	13.3	11.3
14	30A–3P	SPLIT COND. UNIT SSAC–C3	9.14	8.0
15	30A–3P	SNOW MELT SYSTEM	9.0	8.1
16	30A–3P	SPARE	---	---
17	30A–3P	SPARE	---	---
18	20A–3P	DWP #1	6.1	5.1
19	20A–3P	DWP #2	6.1	5.1
20	20A–3P	STEAM COND. PUMP	2.1	1.7
21	20A–3P	MAU-1	2.7	2.2
22	20A–3P	ROLLING GATE	1.5	1.2
23	20A–3P	JOCKEY PUMP	3.8	3.2
24	20A–3P	SPARE	---	---
25	20A–3P	SPARE	---	---
		TOTAL	321.04	273.10

3 Power Distribution Panelboard - PDPHC
SCALE: 3/4" = 1'-0" (EQUIPMENT NE)

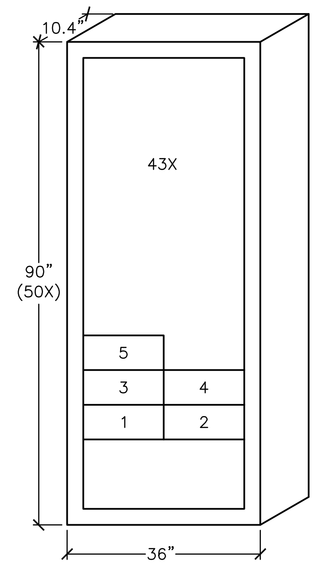

480/277V 3Ø, 4W
400A BUS
35,000 AMPS IC

POSITION	CIRCUIT BREAKER SIZE	EQUIPMENT SERVIED	CONNECTED LOAD–KVA	DEMAND LOAD–KVA
1	200A–3P	ELEVATOR	41.4	35.2
2	200A–3P	ELEVATOR	41.4	35.2
3	200A–3P	ELEVATOR	61.4	52.2
4	200A–3P	ELEVATOR	61.4	52.2
5	125A–3P	SPARE	---	---
		TOTAL	205.60	174.80

4 Power Distribution Panelboard - PDPHD
SCALE: 3/4" = 1'-0" (ELEVATOR NE)

FOR CONSTRUCTION
FULLY SPRINKLERED

Revisions:	Date

CONSULTANTS:

HDR

HDR Architecture, Inc.

1101 King Street | Suite 400 | Alexandria, Virginia 22314-2944 | 703.518.8500

ARCHITECT/ENGINEERS:

ARCHITECTURE
ENGINEERING
INTERIOR DESIGN
DESIGN/BUILD

ASTORINO

227 Fort Pitt Boulevard Pittsburgh Pennsylvania 15222
TEL 412 765 1700 FAX 412 765 1711 www.astorino.com

Drawing Title: **Panel Elevations**

Approved: Project Director

Project Title: **VA CARES CONSOLIDATION VAMC, PITTSBURGH, PA RESEARCH OFFICE BLDG.**

Location: **VAPHS UNIVERSITY DRIVE**

Date | Checked: **TMR** | Drawn: **LLG**

Project Number: **646CA2500R**

Building Number: **30**

Drawing Number: **EP2-202**

Dwg. of

Office of Facilities Management

Department of Veterans Affairs

VA FORM 08-6231, OCT 1978

P:\Project\20054250\CAD\UNIVERSITY DRIVE\Research Office Building\Electrical\EP2-202.dwg LGARDNER 11/20/09 ; 14:05:52

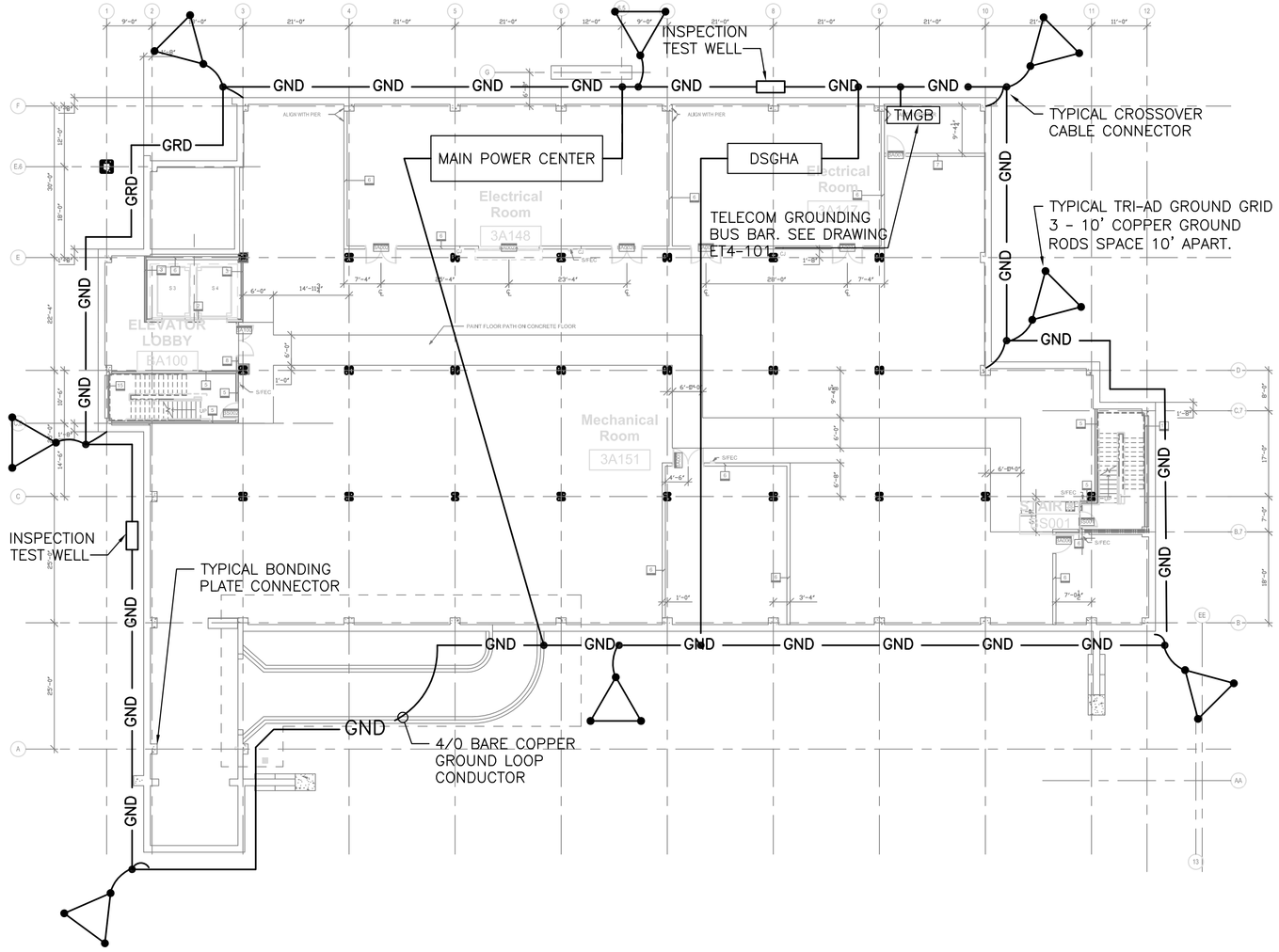

NOTES:

1. PROVIDE A UL MASTER LABEL LIGHTNING PROTECTION SYSTEM PER ELECTRICAL SPECIFICATIONS.
2. LIGHTNING PROTECTION SYSTEM GROUND DOWN CONDUCTORS TO BE CONNECTED TO GROUND LOOP VIA - BI-METAL ELEMENT.

1 Building Ground Loop Detail - Research Office Building, 30
SCALE: 1/16"=1'-0"

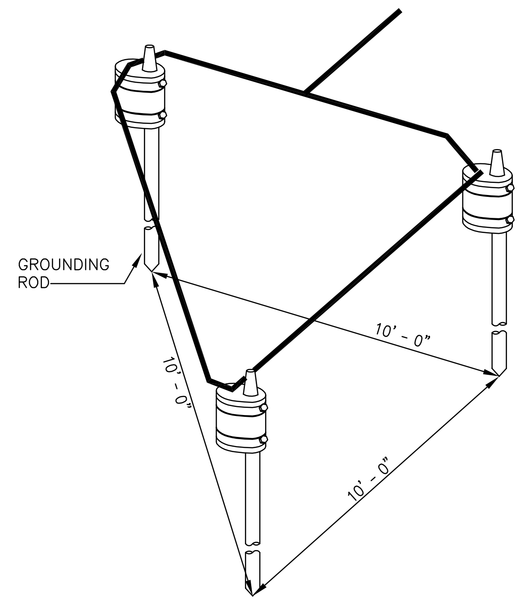

2 Triangular Ground Grid
SCALE: NTS

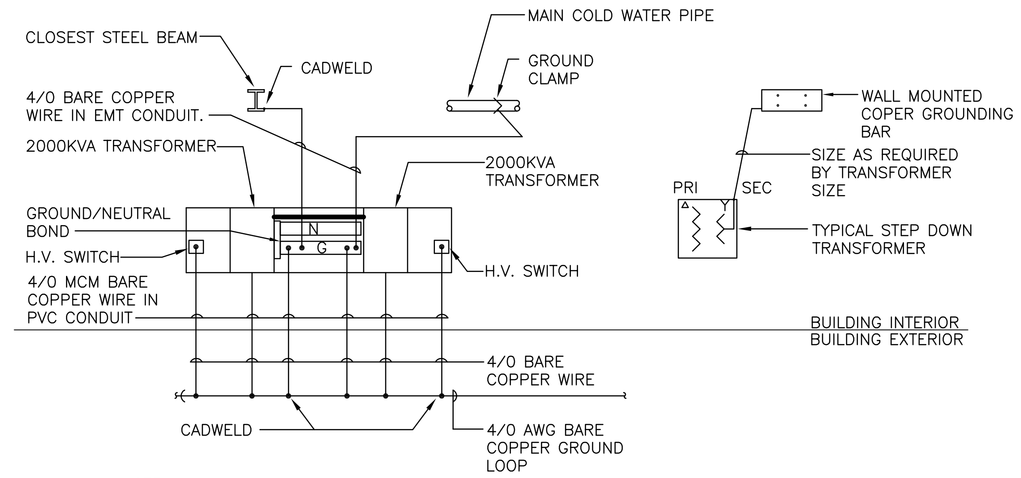

NOTE:
PROVIDE GROUNDING PER NATIONAL ELECTRICAL CODE LATEST EDITION. ARTICLE 250 GROUNDING AND BONDING.

3 Grounding Riser
SCALE: NTS

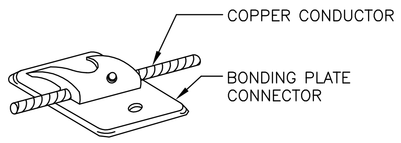

4 Equipment Bonding Plate Connection
SCALE: NTS

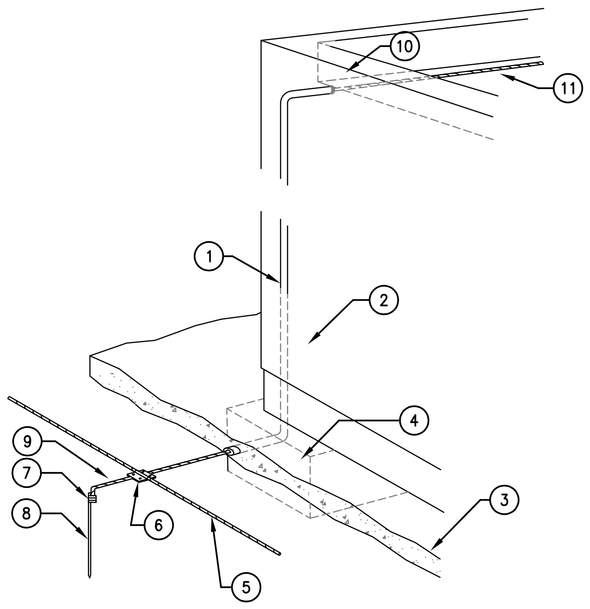

1. DOWN CONDUCTOR IN 1 INCH PVC CONDUIT (SCH. 40) WEATHERPROOFED AND MAINTAINED FREE FROM OBSTRUCTIONS (ALL PVC CONDUIT SHALL BE FURNISHED AND INSTALLED BY THIS CONTRACTOR)
2. COLUMN OR WALL OR CHASE, MUST BE CONCEALED FROM VIEW
3. FINISHED GRADE
4. COLUMN FOOTING
5. GROUND LOOP CONDUCTOR
6. CADWELD CROSSOVER CABLE CONNECTOR
7. GROUND ROD CONNECTION. (EXOTHERMIC CONNECTION)
8. GROUND ROD (5/8" x 10'-0" STAINLESS STEEL GROUND ROD)
9. #2 SOLID TINNED COPPER GROUND LOOP CONDUCTOR
10. SEAL PVC CONDUIT WITH SILICONE SEALANT TO PREVENT INGRESS OF WATER
11. COPPER DOWN CONDUCTOR WITH DRIP LOOP

NOTES:

1. PROVIDE BONDING STRAP TO WATERLINE (FIRE AND DOMESTIC) AND CONNECT ALUMINUM CABLE TO NEAREST DOWN CONDUCTOR, GROUND ROD OR STRUCTURAL STEEL FRAMEWORK.
2. AT EACH DOWN CONDUCTOR LOCATION PROVIDE BONDING CONNECTOR TO STRUCTURAL STEEL OR REBAR AND CONNECT ALUMINUM CABLE TO NEAREST DOWN CONDUCTOR OR GROUND ROD.
3. DO NOT PENETRATE ROOF FOR LIGHTNING PROTECTION SYSTEM. COORDINATE WITH ARCHITECT ON EXACT ROUTING OF PVC CONDUIT AND CONDUCTOR.

5 Connection To Ground Loop
SCALE: NTS

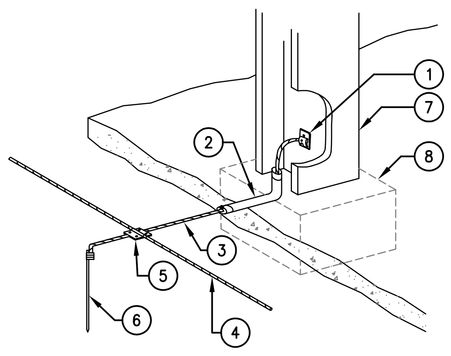

1. BONDING PLATE TO STEEL COLUMN
2. 1" PVC SLEEVE (FURNISHED & INSTALLED BY THE ELEC. CONTR.)
3. GROUNDING CONDUCTOR
4. BLDG. GROUNDING GROUND GRID CONDUCTOR
5. CADWELD CROSSOVER CABLE CONNECTOR
6. 3/4" X 10'-0" COPPERWELD GROUND ROD W/ GROUND ROD CONN.
7. STEEL COLUMN (INTERIOR COLUMN)
8. COLUMN FOOTING

6 Interior Ground Grid Connection
SCALE: NTS

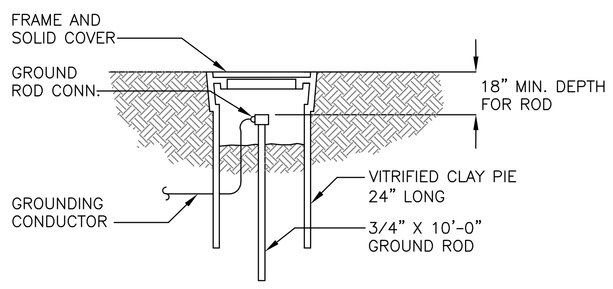

7 Inspection Test Well
SCALE: NTS

FOR CONSTRUCTION
FULLY SPRINKLERED

Revisions:	Date

CONSULTANTS:

HDR Architecture, Inc.
1101 King Street | Suite 400 | Alexandria, Virginia 22314-2944 | 703.518.8500

ARCHITECT/ENGINEERS:

ARCHITECTURE ENGINEERING INTERIOR DESIGN DESIGN/BUILD
ASTORINO
227 Fort Pitt Boulevard Pittsburgh Pennsylvania 15222
TEL 412 765 1700 FAX 412 765 1711 www.astorino.com

Drawing Title	Grounding Loop Plan & Details
Approved: Project Director	
Project Title	VA CARES CONSOLIDATION VAMC, PITTSBURGH, PA RESEARCH OFFICE BLDG.
Project Number	646CA2500R
Building Number	30
Location	VAPHS UNIVERSITY DRIVE
Date	08-18-10
Checked	TMR
Drawn	LLG
Drawing Number	EP3-101
Dwg. of	

Office of Facilities Management
Department of Veterans Affairs

VA FORM 08-6231, OCT 1978

P:\Project\20050425.00\CAD\UNIVERSITY DRIVE\Research Office Building\Electrical\EP3-101.dwg LGARDNER 09/28/09 ; 09:55:41

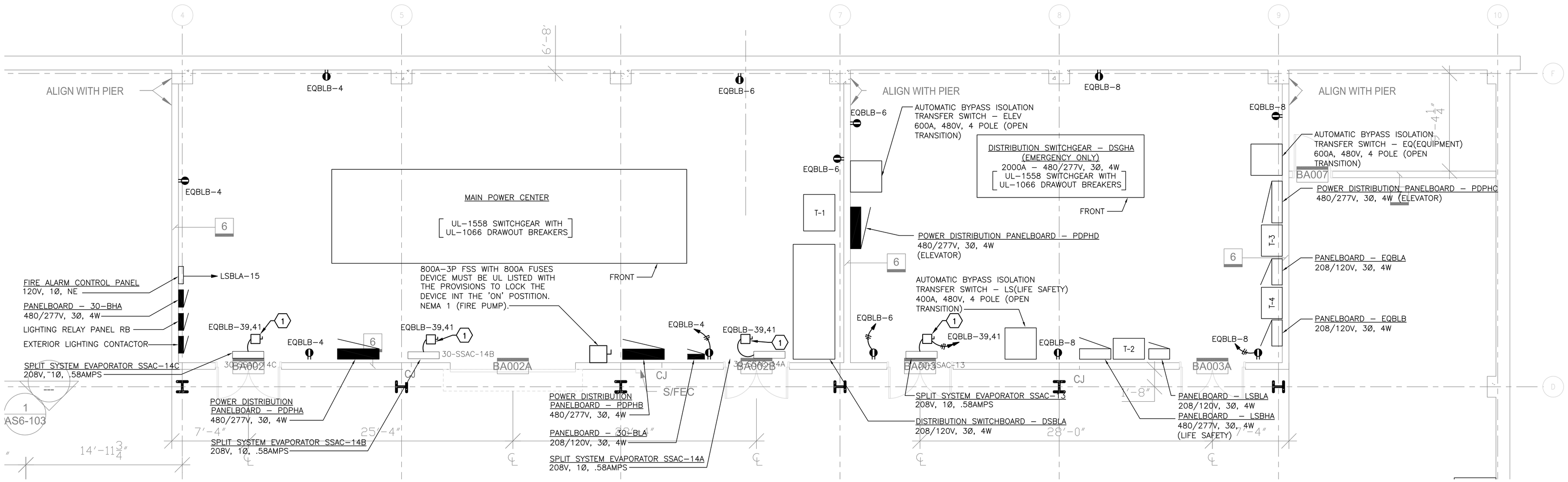

1 Electrical Rooms - BA002 and BA003
SCALE: 1/4"=1'-0"

Key Notes

1. 30A-2P SAFETY SWITCH – NEMA 1.
2. SHADE CONTROL MASTER SWITCH. OUTLET BOX, CONDUIT, WIRING AND TERMINATION BY E.C. SWITCH BY GENERAL CONTRACTOR. REFER TO DRAWINGS EP7-105, EP7-106 & EP7-107 FOR DETAILS.
3. SHADE BUS SUPPLY/REPEATER. CONDUIT, WIRING AND TERMINATIONS BY E.C. REPEATER BY GENERAL CONTRACTOR. REFER TO DRAWINGS EP7-105, EP7-106 & EP7-107 FOR DETAILS.

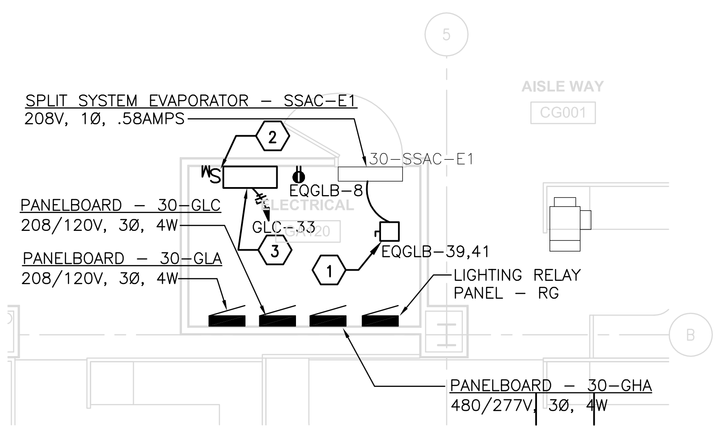

2 Electrical Room - GA120
SCALE: 1/4"=1'-0"

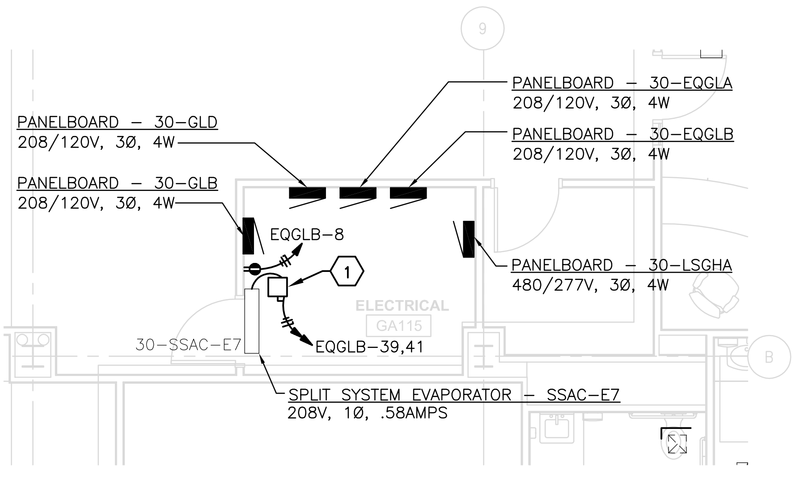

3 Electrical Room - GA115
SCALE: 1/4"=1'-0"

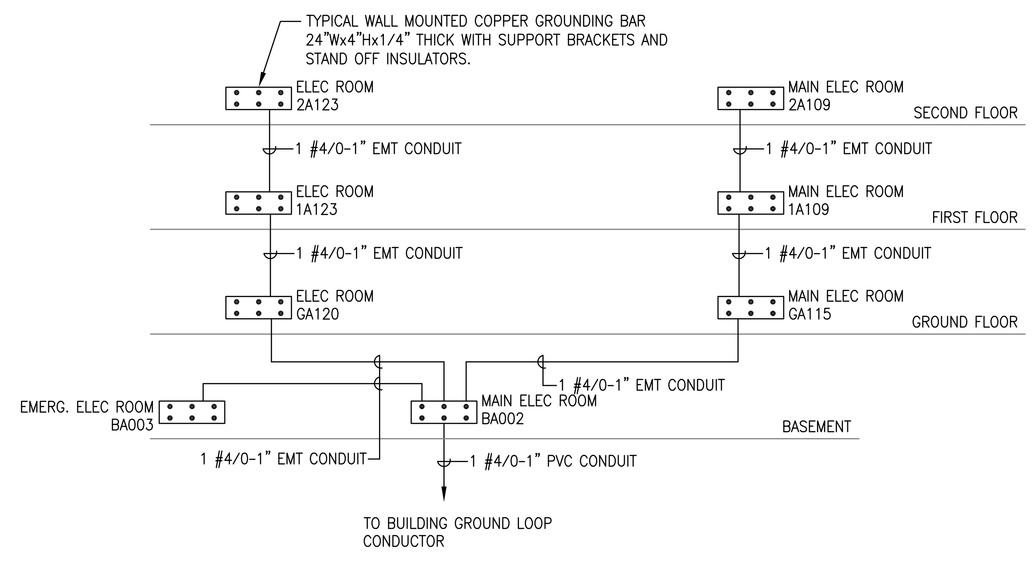

4 Building Ground Riser
SCALE: Not to Scale

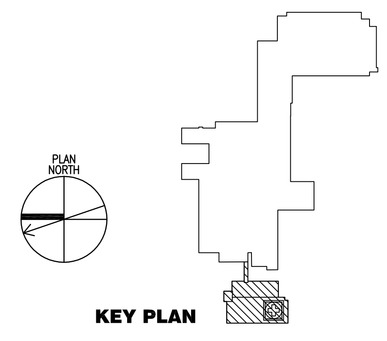

FOR CONSTRUCTION
FULLY SPRINKLERED

Revisions:	Date

CONSULTANTS:

HDR Architecture, Inc.
1101 King Street | Suite 400 | Alexandria, Virginia 22314-2944 | 703.518.8500

ARCHITECT/ENGINEERS:

ARCHITECTURE ENGINEERING INTERIOR DESIGN DESIGN/BUILD
ASTORINO
227 Fort Pitt Boulevard Pittsburgh Pennsylvania 15222
TEL 412 765 1700 FAX 412 765 1711 www.astorino.com

Drawing Title	Enlarged Power Plans
Approved: Project Director	
Project Title	VA CARES CONSOLIDATION VAMC, PITTSBURGH, PA RESEARCH OFFICE BLDG.
Location	VAPHS UNIVERSITY DRIVE
Date	08-18-10
Checked	TMR
Drawn	LLG
Project Number	646CA2500R
Building Number	30
Drawing Number	EP4-201
Dwg. -- of --	

Office of Facilities Management
Department of Veterans Affairs

VA FORM 08-6231, OCT 1978

P:\Project\20054250.00\CAD\UNIVERSITY DRIVE\Research Office Building\Electrical\EP4-201.dwg LGARDNER 10/29/09 - 10:36:40

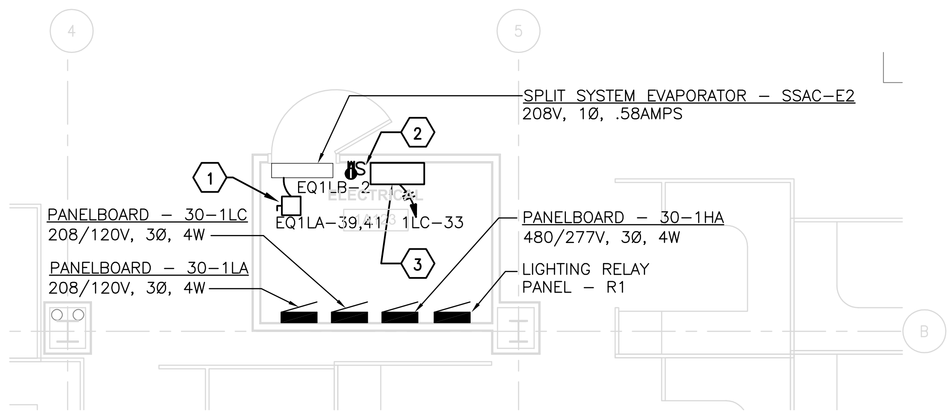

1 Electrical Room - 1A123
SCALE: 1/4"=1'-0"

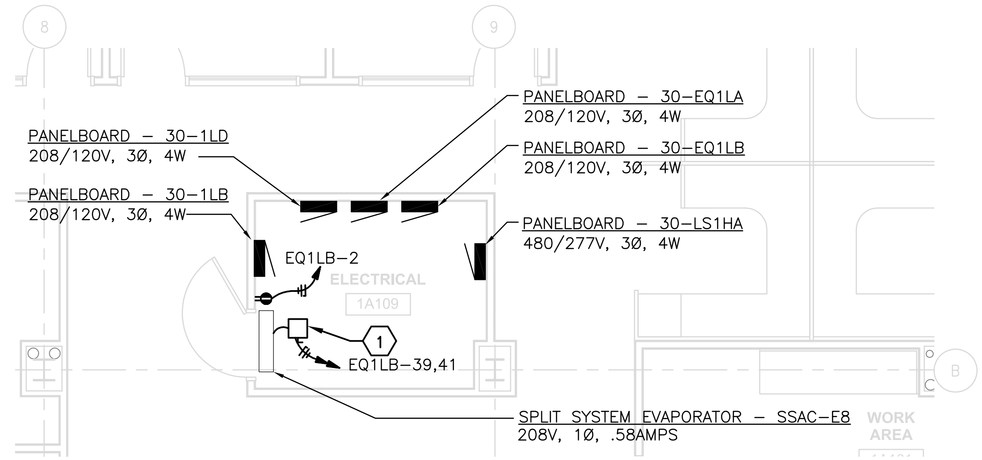

2 Electrical Room - 1A109
SCALE: 1/4"=1'-0"

Key Notes

1. 30A–2P SAFETY SWITCH – NEMA 1.
2. SHADE CONTROL MASTER SWITCH. OUTLET BOX, CONDUIT, WIRING AND TERMINATION BY E.C. SWITCH BY GENERAL CONTRACTOR. REFER TO DRAWINGS EP7–105, EP7–106 & EP7–107 FOR DETAILS.
3. SHADE BUS SUPPLY/REPEATER. CONDUIT, WIRING AND TERMINATIONS BY E.C. REPEATER BY GENERAL CONTRACTOR. REFER TO DRAWINGS EP7–105, EP7–106 & EP7–107 FOR DETAILS.
4. SHADE SUNDIALER. CONDUIT WIRING AND TERMINATIONS BY E.C. SUNDIALER BY GENERAL CONTRACTOR. REFER TO DRAWINGS EP7–105, EP7–106 & EP7–107 FOR DETAILS.

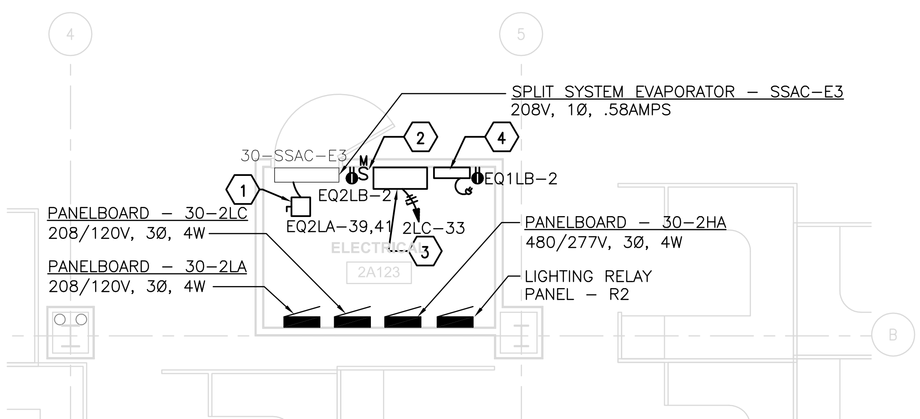

3 Electrical Room - 2A123
SCALE: 1/4"=1'-0"

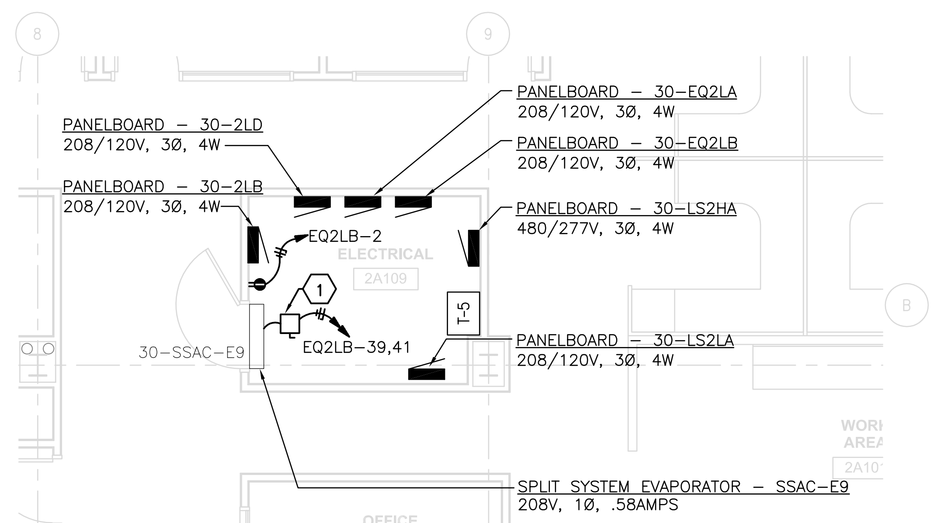

4 Electrical Room - 2A109
SCALE: 1/4"=1'-0"

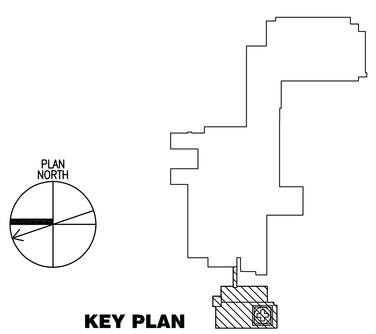

KEY PLAN

FOR CONSTRUCTION
FULLY SPRINKLERED

Revisions:	Date

CONSULTANTS:

HDR

HDR Architecture, Inc.

1101 King Street | Suite 400 | Alexandria, Virginia 22314-2944 | 703.518.8500

ARCHITECT/ENGINEERS:

ARCHITECTURE
ENGINEERING
INTERIOR DESIGN
DESIGN/BUILD

ASTORINO

227 Fort Pitt Boulevard Pittsburgh Pennsylvania 15222
TEL 412 765 1700 FAX 412 765 1711 www.astorino.com

Drawing Title: **Enlarged Power Plans**

Approved: Project Director

Project Title: **VA CARES CONSOLIDATION VAMC, PITTSBURGH, PA RESEARCH OFFICE BLDG.**

Location: **VAPHS UNIVERSITY DRIVE**

Date: **08-18-10** | Checked: **TMR** | Drawn: **LLG**

Project Number: **646CA2500R**

Building Number: **30**

Drawing Number: **EP4-202**

Dwg. -- of --

Office of Facilities Management

Department of Veterans Affairs

VA FORM 08-6231, OCT 1978

P:\Project\3005425.00\CAD\UNIVERSITY DRIVE\Research Office Building\Electrical\EP4-202.dwg SSTROBEL 01/18/10 - 10:09:21

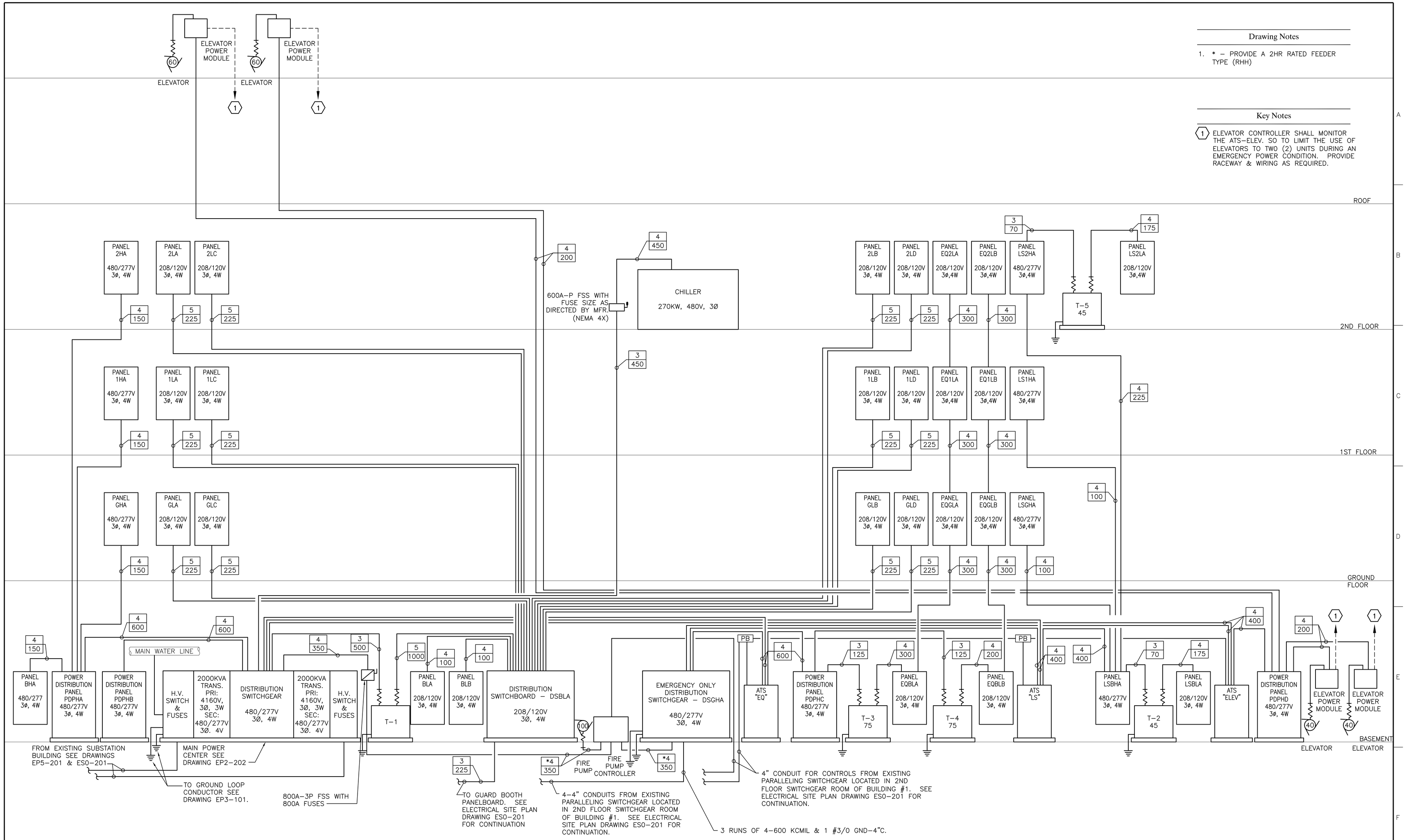

Drawing Notes

1. * – PROVIDE A 2HR RATED FEEDER TYPE (RHH)

Key Notes

(1) ELEVATOR CONTROLLER SHALL MONITOR THE ATS–ELEV. SO TO LIMIT THE USE OF ELEVATORS TO TWO (2) UNITS DURING AN EMERGENCY POWER CONDITION. PROVIDE RACEWAY & WIRING AS REQUIRED.

1 Power Riser Diagram
SCALE: No Scale

FOR CONSTRUCTION
FULLY SPRINKLERED

Revisions:	Date

CONSULTANTS:

HDR

HDR Architecture, Inc.
1101 King Street | Suite 400 | Alexandria, Virginia 22314-2944 | 703.518.8500

ARCHITECT/ENGINEERS:

ARCHITECTURE ENGINEERING INTERIOR DESIGN DESIGN/BUILD
ASTORINO
227 Fort Pitt Boulevard Pittsburgh Pennsylvania 15222
TEL 412 765 1700 FAX 412 765 1711 www.astorino.com

Drawing Title	Power Riser Diagram
Approved: Project Director	
Project Title	VA CARES CONSOLIDATION VAMC, PITTSBURGH, PA RESEARCH OFFICE BLDG.
Project Number	646CA2500R
Building Number	30
Location	VAPHS UNIVERSITY DRIVE
Date	08-18-10
Checked	TMR
Drawn	LLG
Drawing Number	EP5-201
Dwg. -- of --	

Office of Facilities Management
Department of Veterans Affairs

VA FORM 08–6231, OCT 1978

P:\Project\2005425.00\CAD\UNIVERSITY DRIVE\Research Office Building\Electrical\EP5-201.dwg LGARDNER 10/29/09 : 10:20:55

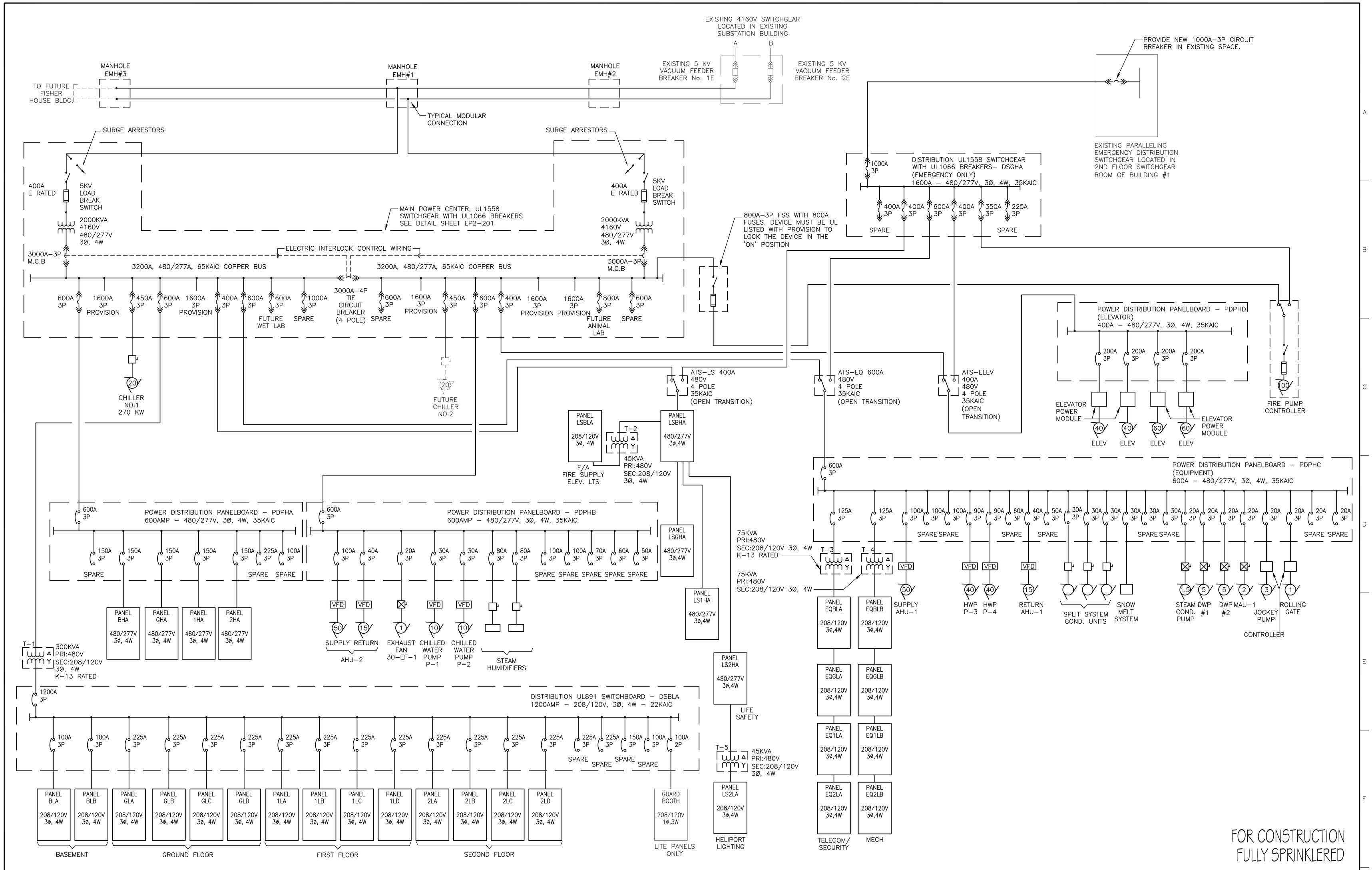

Revisions:	Date

CONSULTANTS:

HDR Architecture, Inc.
1101 King Street | Suite 400 | Alexandria, Virginia 22314-2944 | 703.518.8500

ARCHITECT/ENGINEERS:

ARCHITECTURE ENGINEERING INTERIOR DESIGN DESIGN/BUILD
ASTORINO
227 Fort Pitt Boulevard Pittsburgh Pennsylvania 15222
TEL 412 765 1700 FAX 412 765 1711 www.astorino.com

Drawing Title: **Single Line Diagram**

Approved: Project Director

Project Title: **VA CARES CONSOLIDATION VAMC, PITTSBURGH, PA RESEARCH OFFICE BLDG.**

Location: **VAPHS UNIVERSITY DRIVE**

Date: **08-18-10** | Checked: **TMR** | Drawn: **LLG**

Project Number: **646CA2500R**

Building Number: **30**

Drawing Number: **EP5-202**

Dwg. -- of --

Office of Facilities Management

Department of Veterans Affairs

VA FORM 08–6231, OCT 1978

P:\Project\200542500\CAD\UNIVERSITY DRIVE\Research Office Building\Electrical\EP5-202.dwg SSTROBEL 06/24/10 ; 13:15:53

LIGHTING FIXTURE SCHEDULE

TYPE	DESCRIPTION	LAMP TYPE	BALLAST	MOUNTING	VOLTAGE	BASIS OF DESIGN	NOTES
F01	RECESSED 2X4 HIGH EFFICIENCY 2 LAMP TROFFER	(2)F28T5 80CRI 3500K	ELECTRONIC PROGRAM START <10% THD 68 INPUT WATTS 1.15 BF	CEILING RECESSED	277V	CORELITE R3 R3-W-2-N5-1-D-277-24	1
F02	RECESSED 6" SQUARE DOWNLIGHT WITH VERTICAL LAMP CLEAR BRUSHED TRIM SPECULAR REFLECTOR	(1)32W TRT 80CRI 3500K	ELECTRONIC PROGRAM START <10% THD 36 INPUT WATTS	CEILING RECESSED	277V	ZUMTOBEL BRS6N5D-1V32GX24Q3-U-MS-CB-N	
F02L	RECESSED 6" SQUARE LENSED DOWNLIGHT WITH VERTICAL LAMP CLEAR BRUSHED TRIM SPECULAR REFLECTOR	(1)32W TRT 80CRI 3500K	ELECTRONIC PROGRAM START <10% THD 36 INPUT WATTS	CEILING RECESSED	277V	ZUMTOBEL BRS6N5D-1V32GX24Q3-U-MS-CB-N-DMP	
F03	LINEAR 6' SCONCE WITH ACRYLIC "WINGS"	(2)F21T5 80CRI 3500K	ELECTRONIC PROGRAM START <10% THD 44 INPUT WATTS 0.95 BF	WALL SURFACE	277V	VODE QUEFUSE 215-6'-2T5	1
F04	CONTINUOUS LINEAR RECESSED FIXTURE WITH 3" APERTURE AND ACRYLIC LENS 1 LAMP IN CROSS SECTION	(1)F14T5 80CRI 3500K (1)F21T5 80CRI 3500K (1)F28T5 80CRI 3500K	ELECTRONIC PROGRAM START <10% THD 1.05 BF	WALL/CEILING RECESSED	277V	A LIGHT ACCOLADE 5 2-S-U-A-G/T-T	1,2
F05	INDUSTRIAL 2 LAMP STRIP FIXTURE WITH WIRE GUARD	(2) F28T5 80CRI 3500K	ELECTRONIC PROGRAM START <10% THD 58 INPUT WATTS 0.95 BF	CEILING SURFACE	277V	METALUX IA228-WG	
F06	2X4 2 LAMP LENSED TROFFER	(2) F28T5 80CRI 3500K	ELECTRONIC PROGRAM START <10% THD 58 INPUT WATTS 0.95 BF	CEILING RECESSED	277V	METALUX 2GR5228	1
F07	2X4 HIGH EFFICIENCY 3 LAMP TROFFER	(3)F28T5 80CRI 3500K	NOTE 3	CEILING RECESSED	277V	CORELITE R3 R3-W-2-N5-1-D-277-24	3
F08	FLUORESCENT VANITY SCONCE	(1)F14T5 80CRI 3500K	ELECTRONIC PROGRAM START <10% THD 19 INPUT WATTS 1.07 BF	WALL/SURFACE ABOVE MIRROR	277V	VODE QUEFUSE 235-3'-2T5	
F09	RECESSED 3" X 4' LINEAR WALL WASH WITH PERFORATED LOUVER AND METALLIC TRIM FINISH	(1)F28T5 80CRI 3500K	ELECTRONIC PROGRAM START <10% THD 31 INPUT WATTS 1.05 BF	CEILING RECESSED	277V	FOCAL POINT AVENUE A FAVA-RL-1T5-1C-277-S-TS-4'	1
F10	SEMI-RECESSED SURFACE FIXTURE WITH 3 WHITE SPUN ALUMINUM SHADE RINGS ~17" DIAMETER AND ~5" DEPTH	(2)32WATT TRT 80CRI 3500K	ELECTRONIC PROGRAM START <10% THD 68 INPUT WATTS 0.98 BF	SEMI RECESSED	277V	LOUIS POULSEN OSLO MAGIC MAGIC-2/32W-3-277-OSLO-WHITE	
F11	4' LINER WALL MOUNT DIRECT INDIRECT FIXTURE WITH ALUMINUM COLOR FINISH	(1)F28T5 80CRI 3500K	DIGITAL DIMMING <10% THD 32.6 INPUT WATTS 1.0 BF	WALL SURFACE	277V	CORELITE IRIDIUM PERF WALL IW-S-P-1-N5-1-D-277-SU-WA-C	
F12	4' LINER DIRECT INDIRECT FIXTURE WITH ALUMINUM COLOR FINISH, PERFORATED BAFFLE AND 80% DOWNLIGHT REFLECTOR	(2)F28T5 80CRI 3500K	DIGITAL DIMMING <10% THD 64.5 INPUT WATTS 1.0 BF	AIRCRAFT CABLE PENDANT	277V	CORELITE IRIDIUM IQ SUSPENDED IQ-S-B-2-N5-1-D-277-A-C-48-DL4	
F13	4' WALL MOUNT DUAL BALLAST STAIR FIXTURE WITH INTEGRATED OCCUPANCY SENSOR	(2)F28T5 80CRI 3500K	(2)ELECTRONIC PROGRAM START <10% THD 31 INPUT WATTS 1.05 BF	WALL	277V	SURE LITES STAIR LITE 2	
F14	4" DIAMETER CONIC BRUSHED ALUMINUM PENDANT DOWNLIGHT	(1)32W TRT 80CRI 3500K	DIGITAL DIMMING <10% THD 31.7 INPUT WATTS 0.95 BF	PENDANT	277V	GOTHAM LIGHTING PDPF-32TRT-4PR-MV-DMHL-SS-NR	
F15	3 1/2" SQUARE FIXED LOW VOLTAGE DOWNLIGHT WITH STAINLESS STEEL TRIM	(1)35W FLOOD MR16 (USHIO EUROSAVER)	INTEGRAL MAGNETIC TRANSFORMER	RECESSED	277V	RSA LIGHTING MINI QUIET CEILING QCM5101-SS	
F16	EXTRUDED ALUMINUM COVE ASSEMBLY AND FIXTURE WITH STAGGERED LAMPS	(1)F28T5 80CRI 3500K	ELECTRONIC PROGRAM START <10% THD 31 INPUT WATTS 1.05 BF	COVE	277V	ELECTRIX LUMILEDGE LLSR-FR7-GTDS7	2,4
F17	ROUND PENDANT WITH CONCENTRIC LAYERED WHITE ALUMINUM SHADES 2' DIAMETER	(2)42 WATT TRT 80CRI 3500K	DIGITAL DIMMING <10% THD 85 INPUT WATTS 1.0 BF	PENDANT 9' AFF	277V	LOUIS POULSEN OSLO PENDANT OSP-2/42W/CF-120-277V-WHT	
F18	STANDARD OUTPUT LINEAR LED COVE FIXTURE	INTEGRAL 3000K LED	DIMMING DRIVER	ABOVE WOOD CEILING PANEL	277V	IO RAYE 0-08-3K-C26-1-XX-277V W/ DIM	2
F19	28" BRUSHED STAINLESS STEEL ARTICHOKE PENDANT	(1)150W T-6 G12 CMH	ELECTRONIC PULSE START	PENDANT	277V	LOUIS POULSEN PH ARTICHOKE PHA-28.3"-1/150W/CMH T-6 G12-120/277V BR ST STEEL	
F20	4' LINEAR CONTINUOUS PENDANT WALL WASH BRUSHED ALUMINUM FINISH	(1)F28T5 80CRI 3500K	ELECTRONIC DIMMING <10% THD 33 INPUT WATTS 1.0 BF	PENDANT 9' AFF	277V	AMETRIX VAULT VS-SI-N-1-LF-N5-I-D-UNV-S	

LIGHTING FIXTURE SCHEDULE

TYPE	DESCRIPTION	LAMP TYPE	BALLAST	MOUNTING	VOLTAGE	BASIS OF DESIGN	NOTES
F21	4' LINEAR CONTINUOUS WALL MOUNT CEILING WASH BRUSHED ALUMINUM FINISH	(1)F28T5 80CRI 3500K	ELECTRONIC DIMMING <10% THD 33 INPUT WATTS 1.0 BF	WALL 7'6" AFF	277V	AMETRIX VAULT VS-SI-N-1-LF-N5-I-D-UNV-S-CYI	
F22	3 1/2" SQUARE LOW VOLTAGE RECESSED WALL WASH WITH STAINLESS STEEL TRIM	(1)35W FLOOR MR16 (USHIO EUROSAVER)	INTEGRAL MAGNETIC TRANSFORMER	RECESSED	277V-12V	RSA LIGHTING MINI QUIET CEILING QCM5102-SS	
F23	WALL MOUNTED BATTERY PACK UNIT WITH TWO FULLY ADJUSTABLE METAL HEADS & PREMIUM NICKEL CADMIUM BATTERIES	(2) 12W HALOGEN	NA	SURFACE	277V-12V	SURELITES XR21C-A	
F24	EXTERIOR PARTIAL CYLINDER WALL MOUNT WITH LUMINOUS GLASS INSERT AND GRAPHITE METALLIC FINISH TYPE III DOWNLIGHT DISTRIBUTION WITH NO UPLIGHT	(1)39WATT T6-G12 PULSE START METAL HALIDE	ELECTRONIC PULSE START	WALL 12' ABOVE GRADE	277V	INVUE ENTRI ROUND ENV-39-277-EB-3S-GM-LG	
F25	EXTERIOR PARTIAL CYLINDER WALL MOUNT WITH LUMINOUS GLASS INSERT AND GRAPHITE METALLIC FINISH TYPE III DOWNLIGHT DISTRIBUTION WITH 10% UPLIGHT	(1)39WATT T6-G12 PULSE START METAL HALIDE	ELECTRONIC PULSE START	WALL 12' ABOVE GRADE	277V	INVUE ENTRI ROUND ENV-39-277-EB-3SG-GM-LG	
F26	IP65 RATED DOWNLIGHT WITH ALUMINUM HOUSING AND REFLECTOR, GLASS LENS WITH SILICONE WEATHERPROOF GASKET, STAINLESS STEEL HARDWARE AND GREY METALLIC FINISH	(1)32W TRT 80CRI 3500K	ELECTRONIC INSTANT START <10% THD 34 INPUT WATTS	EXTERIOR RECESSED	277V	WE-EF ARCHITECTURAL DOC240-630-5332	
F27	4' VAPOR TIGHT INDUSTRIAL WRAP FIXTURE WITH VANDAL RESISTANT LENS FOR ELEVATOR PIT	(2)F28T5 85CRI 3500K	ELECTRONIC PROGRAM START <10% THD 58 INPUT WATTS 0.95 BF	WALL 18"AFF	277V	METALUX LIGHTING VT2-228T5-DR	
F28	EXTERIOR WET RATED 36" WALL MOUNT EGRESS FIXTURE WITH CAST ALUMINUM HOUSING AND 90 MINUTE EMERGENCY BATTERY BACKUP	(1)F39T5HO 80CRI 3500K	ELECTRONIC PROGRAM START <10% THD 40 INPUT WATTS 0.9 BF	WALL SURFACE IMMEDIATELY ABOVE DOOR	277V	LUMINAIRE AEL36-139HO-277-CL-BKH-PC-EMB700	
F29	WALL MOUNTED LED "BLUE" FIRE EXTINGUISHER CABINET LIGHT FIXTURE	LED	NA	RECESSED WALL	277V	ELCAST FE-1-LED-277V	
F30	SINGLE HEAD SITE LIGHTING POLE MOUNT FIXTURE WITH TYPE 3 DISTRIBUTION AND HOUSE SIDE SHEILD WITH 20' ROUND STEEL POLE	150W ED17 PULSE START CERAMIC METAL HALIDE	ELECTRONIC <10% THD 161 INPUT WATTS	20' ROUND STEEL POLE	277V	INVUE STRUT STS-150-MP-3S-AP-HS	
F31	SINGLE HEAD SITE LIGHTING POLE MOUNT FIXTURE WITH TYPE 3 DISTRIBUTIONWITH 20' ROUND STEEL POLE	150W ED17 PULSE START CERAMIC METAL HALIDE	ELECTRONIC <10% THD 161 INPUT WATTS	20' ROUND STEEL POLE	277V	INVUE STRUT STS-150-MP-3S-AP	
F32	DOUBLE HEAD SITE LIGHTING POLE MOUNT FIXTURE WITH TYPE 3 DISTRIBUTIONWITH 20' ROUND STEEL POLE	(2)150W ED17 PULSE START CERAMIC METAL HALIDE	(2)ELECTRONIC <10% THD 161 INPUT WATTS	20' ROUND STEEL POLE	277V	INVUE STRUT STS-150-MP-3S-AP	
F33	36" SQUARE STEEL BOLLARD WITH STACKED LOUVER AND PYRAMID TOP WITH INTEGRAL PHOTOCELL	50W ED17 CERAMIC METAL HALIDE	ELECTRONIC <15% THD 55 INPUT WATTS	GROUND	277V	McGRAW-EDISON BSL-36-50-MH-277-AP-PC	
F34	4' 2-LAMP WRAP AROUND FIXTURE	(2) F28T5 82CRI 3500K	ELECTRONIC PROGRAM START <10% THD 58 INPUT WATTS 0.95 BF	SURFACE	277V	METALUX W232A-UNV-ER8	
EX1	CLEAR SINGLE SIDED EXIT SIGN WITH RED LETTERING AND MIRRORED FACE	INTEGRAL RED LED	NA	NOTE 5	277V	SURE LITES UV-6-1-R	
EX2	CLEAR DOUBLE SIDED EXIT SIGN WITH RED LETTERING AND MIRRORED FACE	INTEGRAL RED LED	NA	NOTE 5	277V	SURE LITES ES SERIES ES6-2-RM	
EX3	WALL MOUNTED SINGLE SIDED EXIT SIGN WITH RED LETTERING AND WEATHER PROOF HOUSING.	INTEGRAL RED LED	NA	NOTE 5	277V	SURE LITES ES SERIES ES6-2-RM	

GENERAL SCHEDULE NOTES:

1. ALL FLUORESCENT LAMPS ARE TO BE LOW MERCURY (HG) TYPE. MAXIMUM HG CONTENT OF F32T8 LAMPS IS 3.5 mg. MAX HG OF F14T5 IS 3.5 mg. MAX HG OF 32W TRT IS 4.5 mg. MAX HG OF 100W T6 IS 12.8 mg. MAX HG OF F54T5HO IS 2.5 mg. MAX HG OF F39T5HO IS 2.5 mg. MAX HG OF F17T8 IS 3.5 mg. MAX HG OF 250E17 PULSE START METAL HALIDE IS 24.1 mg. MAX HG OF 50W E17 METAL HALIDE IS 10.5 mg.
2. UNDER LIGHTING CONTROL ALTERNATE, ALL FIXTURES IN OPEN OFFICE AREAS AND PERIMETER OFFICES WILL BE PROVIDED WITH A LUTRON ECOSYSTEM DIMMING BALLAST (OR APPROVED EQUAL).

FIXTURE NOTES:

1. COORDINATE MOUNTING CONDITIONS WITH ARCHITECTURAL REFLECTED CEILING PLAN AND INTERIOR ELEVATION.
2. COORDINATE EXACT LENGTH OF FIXTURE RUN WITH ARCHITECTURAL REFLECTED CEILING PLAN AND INTERIOR ELEVATION. PROVIDE SHOP DRAWINGS ILLUSTRATING EXACT ARRANGEMENT OF FIXTURES TO PROVIDE A CONTINUOUS RUN.
3. PROVIDE (1) 2 LAMP 1.15 BF ELECTRONIC BALLAST WITH <10% THD AND (1) 1 LAMP 1.05 BF ELECTRONIC BALLAST WITH <10% THD FOR A TOTAL INPUT WATTAGE OF 99 WATTS.
4. COORDINATE INSTALLATION OF COVE ASSEMBLY WITH GENERAL CONTRACTOR.
5. ELECTRICAL CONTRACTOR IS RESPONSIBLE FOR COORDINATION OF ANY DIRECTIONAL CHEVRONS AND MOUNTING CONDITIONS WITH LIGHTING FLOOR PLAN.

FOR CONSTRUCTION
FULLY SPRINKLERED

Revisions: | Date

CONSULTANTS:

HDR Architecture, Inc.
1101 King Street | Suite 400 | Alexandria, Virginia 22314-2944 | 703.518.8500

ARCHITECT/ENGINEERS:

ARCHITECTURE ENGINEERING INTERIOR DESIGN DESIGN/BUILD
ASTORINO
227 Fort Pitt Boulevard Pittsburgh Pennsylvania 15222
TEL 412 765 1700 FAX 412 765 1711 www.astorino.com

Drawing Title: **Lighting Fixture Schedule**

Approved: Project Director

Project Title: **VA CARES CONSOLIDATION VAMC, PITTSBURGH, PA RESEARCH OFFICE BLDG.**

Location: **VAPHS UNIVERSITY DRIVE**

Date: **08-18-10** | Checked: **TMR** | Drawn: **LLG**

Project Number: **646CA2500R**
Building Number: **30**
Drawing Number: **EP6-101**
Dwg. -- of --

Office of Facilities Management
Department of Veterans Affairs

VA FORM 08-6231, OCT 1978

P:\Project\20054250\CAD\UNIVERSITY DRIVE\Research Office Building\Electrical\EP6-101.dwg SSTRGBEL 06/23/10 - 11:30:22

LIGHTING RELAY PANEL SCHEDULE

PANEL NAME: RB

LOCATION: BA102–SWITCHGEAR RM. BASEMENT

RELAY #	PANEL & CCT#	DESCRIPTION
1	BHA-1	ELECTRICAL ROOM (NORMAL)
2	BHA-1	ELECTRICAL ROOM (EMERGENCY)
3	BHA-1	TELECOM ROOM
4	BHA-3	MECHANICAL ROOM
5	BHA-5	MECHANICAL ROOM
6	BHA-5	FIRE PUMP ROOM
7	BHA-5	ELEV. MACH. ROOM
8	BHA-3	ELEVATOR LOBBY
9	LSBHA-7	SITE POLES
10	LSBHA-9	SITE POLES
11	LSBHA-11	SITE POLES
12	LSBHA-13	SITE POLES
13	LSBHA-15	SITE BOLLARDS
14		SPARE
15		SPARE
16		SPARE
17		SPARE
18		SPARE
19		SPARE
20		SPARE
21		SPARE
22		SPARE
23		SPARE
24		SPARE
25		SPARE
26		SPARE
27		SPARE
28		SPARE
29		SPARE
30		SPARE

NOTE:
PROVIDE BARRIER IN LIGHTING CONTROL RELAY PANEL FOR NORMAL - NORMAL/EMERGENCY SEPARATION. IF BARRIER CANNOT BE PROVIDED, CONTRACTOR SHALL PROVIDE AN ADDITIONAL LINKED PANEL TO ACCOMMODATE NE CIRCUITS.

LIGHTING RELAY PANEL SCHEDULE

PANEL NAME: RG

LOCATION: GA120–ELEC. CLOSET GROUND FLOOR

RELAY #	PANEL & CCT#	DESCRIPTION
1	GHA-1	WOMEN'S TOILET
2	GHA-1	JAN. CLOSET
3	GHA-1	MEN'S TOILET
4	GHA-1	LOBBY
5	GHA-1	VESTIBULE
6	GHA-1	WAITING
7	GHA-3	AISLEWAY
8	GHA-3	BLOOD DRAW
9	GHA-3	PASSAGE
10	GHA-3	EXAM
11	GHA-3	EXAM
12	GHA-3	EXAM
13	GHA-3	EXAM
14	GHA-7	CONF. ROOM
15	GHA-5	CLINICAL TRIALS
16	GHA-5	CLINICAL TRIALS
17	GHA-5	WORK AREA
18	GHA-2	OPEN AREA/WORK AREA
19	GHA-2	OPEN AREA
20	GHA-2	OFFICE
21	GHA-2	OFFICE
22	GHA-2	STAFF LOUNGE
23	GHA–9	AISLEWAY COVE
24	GHA–11	AISLEWAY
25	GHA–4	OPEN AREA
26	GHA–6	OFFICE
27	GHA–6	OFFICE
28	GHA–6	OFFICE
29	GHA–6	OFFICE
30	GHA–6	OFFICE
31	GHA–6	OFFICE
32	GHA–6	OFFICE
33	GHA–6	OFFICE
34	GHA–6	OFFICE
35	GHA–6	OFFICE
36	GHA–6	OFFICE
37	GHA–6	OFFICE
38	GHA–6	OFFICE
39	GHA–6	OFFICE
40	GHA–6	ELEVATOR LOBBY
41	GHA–8	OPEN AREA
42	GHA-10	EXTERIOR BUILDING
43	GHA–12	CANOPY
44	GHA–12	CANOPY
45		SPARE
46		SPARE
47		SPARE
48		SPARE
49		SPARE
50		SPARE
51		SPARE
52		SPARE
53		SPARE
54		SPARE
55		SPARE
56		SPARE
57		SPARE
58		SPARE
59		SPARE
60		SPARE

LIGHTING RELAY PANEL SCHEDULE

PANEL NAME: R1

LOCATION: 1A123–ELEC. CLOSET FIRST FLOOR

RELAY #	PANEL & CCT#	DESCRIPTION
1	1HA-1	WOMEN'S TOILET
2	1HA-1	JAN CLOSET
3	1HA-1	MEN'S TOILET
4	1HA-1	OPEN AREA
5	1HA-1	OPEN AREA
6	1HA-1	OPEN AREA
7	1HA-3	OPEN AREA
8	1HA-3	OFFICE
9	1HA-3	OFFICE
10		SPARE
11	1HA-3	INTERACTIVE AREA
12	1HA-3	OFFICE
13	1HA-3	CONFERENCE ROOM
14	1HA-3	OFFICE
15	1HA-3	OFFICE
16	1HA-3	OFFICE
17	1HA-3	OFFICE
18	1HA-3	OFFICE
19	1HA–5	AISLEWAY
20	1HA–5	OPEN AREA
21	1HA–7	AISLEWAY COVE
22	1HA–9	OFFICE
23	1HA–9	OFFICE
24	1HA–9	OFFICE
25	1HA–9	OFFICE
26	1HA–9	OFFICE
27	1HA–9	OFFICE
28	1HA–9	OFFICE
29	1HA–9	OFFICE
30	1HA–9	OFFICE
31	1HA–9	OFFICE
32	1HA–9	OFFICE
33	1HA–9	OFFICE
34	1HA–9	OFFICE
35	1HA–9	OFFICE
36	1HA–9	OFFICE
37	1HA–9	OFFICE
38	1HA–9	OFFICE
39	1HA–9	OFFICE
40	1HA–9	OFFICE
41	1HA–9	OFFICE
42	1HA–11	OPEN OFFICE
43	1HA–11	OPEN OFFICE
43	1HA–11	OPEN OFFICE
44	1HA–11	OFFICE
45	1HA–11	OFFICE
46	1HA–11	LOUNGE
47	1HA–2	PENTHOUSE
48	1HA–4	ELEVATOR LOBBY
49		SPARE
50		SPARE
51		SPARE
52		SPARE
53		SPARE
54		SPARE
55		SPARE
56		SPARE
57		SPARE
58		SPARE
59		SPARE
60		SPARE

LIGHTING RELAY PANEL SCHEDULE

PANEL NAME: R2

LOCATION: 2A123–ELEC. CLOSET SECOND FLOOR

RELAY #	PANEL & CCT#	DESCRIPTION
1	2HA-1	WOMEN'S TOILET
2	2HA-1	JAN CLOSET
3	2HA-1	MEN'S TOILET
4	2HA-1	OPEN AREA
5	2HA-1	OPEN AREA
6	2HA-1	OPEN AREA
7	2HA-3	OPEN AREA
8	2HA-3	OFFICE
9	2HA-3	OFFICE
10		SPARE
11	2HA-3	INTERACTIVE AREA
12	2HA-3	OFFICE
13	2HA-3	CONFERENCE ROOM
14	2HA-3	OFFICE
15	2HA-3	OFFICE
16	2HA-3	OFFICE
17	2HA-3	OFFICE
18	2HA-3	OFFICE
19	2HA–5	AISLEWAY
20	2HA–5	OPEN AREA
21	2HA–7	AISLEWAY COVE
22	2HA–9	OFFICE
23	2HA–9	OFFICE
24	2HA–9	OFFICE
25	2HA–9	OFFICE
26	2HA–9	OFFICE
27	2HA–9	OFFICE
28	2HA–9	OFFICE
29	2HA–9	OFFICE
30	2HA–9	OFFICE
31	2HA–9	OFFICE
32	2HA–9	OFFICE
33	2HA–9	OFFICE
34	2HA–9	OFFICE
35	2HA–9	OFFICE
36	2HA–9	OFFICE
37	2HA–9	OFFICE
38	2HA–9	OFFICE
39	2HA–9	OFFICE
40	2HA–9	OFFICE
41	2HA–9	OFFICE
42	2HA–11	OPEN OFFICE
43	2HA–11	OPEN OFFICE
43	2HA–11	OPEN OFFICE
44	2HA–11	OFFICE
45	2HA–11	OFFICE
46	2HA–11	LOUNGE
47	2HA–2	PENTHOUSE
48		SPARE
49		SPARE
50	2HA–8	ROOM ELEV. LOBBY
51	2HA–8	ELEV. MACH. ROOM
52		SPARE
53		SPARE
54		SPARE
55		SPARE
56		SPARE
57		SPARE
58		SPARE
59		SPARE
60		SPARE

FOR CONSTRUCTION
FULLY SPRINKLERED

Revisions:	Date

CONSULTANTS:

HDR

HDR Architecture, Inc.

1101 King Street | Suite 400 | Alexandria, Virginia 22314-2944 | 703.518.8500

ARCHITECT/ENGINEERS:

ARCHITECTURE ENGINEERING INTERIOR DESIGN DESIGN/BUILD

ASTORINO

227 Fort Pitt Boulevard Pittsburgh Pennsylvania 15222
TEL 412 765 1700 FAX 412 765 1711 www.astorino.com

Drawing Title: **Lighting Relay Panel Schedules**

Approved: Project Director

Project Title: **VA CARES CONSOLIDATION VAMC, PITTSBURGH, PA RESEARCH OFFICE BLDG.**

Location: **VAPHS UNIVERSITY DRIVE**

Date | Checked: **TMR** | Drawn: **LLG**

Project Number: **646CA2500R**

Building Number: **30**

Drawing Number: **EP6-103**

Dwg. of

Office of Facilities Management

Department of Veterans Affairs

VA FORM 08-6231, OCT 1978

P:\Project\20054250.00\CAD\UNIVERSITY DRIVE\Research Office Building\Electrical\EP6-103.dwg LGARDNER 11/23/09 10:33:32

FEEDER TYPE

XX	1	2	3	4	4T	5
XXX	1PH, 2W, +G	1PH, 3W, +G	3PH, 3W, +G	3PH, 4W, +G	3PH, 4W, +G	3PH, 5W, +G (200% NEUTRAL)
10	(2) #12 & (1) #12G – 3/4" C	(3) #12 & (1) #12G – 3/4" C	(3) #12 & (1) #12G – 3/4" C	(4) #12 & (1) #12G – 3/4" C	(4) #12 & (1) #8G – 3/4" C	(5) #12 & (1) #12G – 3/4" C
15	(2) #12 & (1) #12G – 3/4" C	(3) #12 & (1) #12G – 3/4" C	(3) #12 & (1) #12G – 3/4" C	(4) #12 & (1) #12G – 3/4" C	(4) #12 & (1) #8G – 3/4" C	(5) #12 & (1) #12G – 3/4" C
20	(2) #12 & (1) #12G – 3/4" C	(3) #12 & (1) #12G – 3/4" C	(3) #12 & (1) #12G – 3/4" C	(4) #12 & (1) #12G – 3/4" C	(4) #12 & (1) #8G – 3/4" C	(5) #12 & (1) #12G – 3/4" C
25	(2) #10 & (1) #10G – 3/4" C	(3) #10 & (1) #10G – 3/4" C	(3) #10 & (1) #10G – 3/4" C	(4) #10 & (1) #10G – 3/4" C	(4) #10 & (1) #8G – 3/4" C	(5) #10 & (1) #10G – 3/4" C
30	(2) #10 & (1) #10G – 3/4" C	(3) #10 & (1) #10G – 3/4" C	(3) #10 & (1) #10G – 3/4" C	(4) #10 & (1) #10G – 3/4" C	(4) #10 & (1) #8G – 3/4" C	(5) #10 & (1) #10G – 3/4" C
35	(2) #8 & (1) #10G – 3/4" C	(3) #8 & (1) #10G – 3/4" C	(3) #8 & (1) #10G – 3/4" C	(4) #8 & (1) #10G – 3/4" C	(4) #8 & (1) #8G – 3/4" C	(5) #8 & (1) #10G – 3/4" C
40	(2) #8 & (1) #10G – 3/4" C	(3) #8 & (1) #10G – 3/4" C	(3) #8 & (1) #10G – 3/4" C	(4) #8 & (1) #10G – 3/4" C	(4) #8 & (1) #8G – 3/4" C	(5) #8 & (1) #10G – 3/4" C
45	(2) #6 & (1) #10G – 3/4" C	(3) #6 & (1) #10G – 3/4" C	(3) #6 & (1) #10G – 3/4" C	(4) #6 & (1) #10G – 3/4" C	(4) #6 & (1) #8G – 1" C	(5) #6 & (1) #10G – 1" C
50	(2) #6 & (1) #10G – 3/4" C	(3) #6 & (1) #10G – 3/4" C	(3) #6 & (1) #10G – 3/4" C	(4) #6 & (1) #10G – 3/4" C	(4) #6 & (1) #8G – 1" C	(5) #6 & (1) #10G – 1" C
60	(2) #4 & (1) #10G – 1" C	(3) #4 & (1) #10G – 1" C	(3) #4 & (1) #10G – 1" C	(4) #4 & (1) #10G – 1 1/4" C	(4) #4 & (1) #8G – 1 1/4" C	(5) #4 & (1) #10G – 1 1/4" C
70	(2) #4 & (1) #8G – 1" C	(3) #4 & (1) #8G – 1 1/4" C	(3) #4 & (1) #8G – 1 1/4" C	(4) #4 & (1) #8G – 1 1/4" C	(4) #4 & (1) #8G – 1 1/4" C	(5) #4 & (1) #8G – 1 1/4" C
80	(2) #3 & (1) #8G – 1" C	(3) #3 & (1) #8G – 1 1/4" C	(3) #3 & (1) #8G – 1 1/4" C	(4) #3 & (1) #8G – 1 1/4" C	(4) #3 & (1) #8G – 1 1/4" C	(5) #3 & (1) #8G – 1 1/4" C
90	(2) #2 & (1) #8G – 1" C	(3) #2 & (1) #8G – 1 1/4" C	(3) #2 & (1) #8G – 1 1/4" C	(4) #2 & (1) #8G – 1 1/2" C	(4) #2 & (1) #8G – 1 1/2" C	(5) #2 & (1) #8G – 1 1/2" C
100	(2) #1 & (1) #8G – 1 1/4" C	(3) #1 & (1) #8G – 1 1/2" C	(3) #1 & (1) #8G – 1 1/2" C	(4) #1 & (1) #8G – 1 1/2" C	(4) #1 & (1) #6G – 1 1/2" C	(5) #1 & (1) #8G – 2" C
125		(3) #1 & (1) #6G – 1 1/2" C	(3) #1 & (1) #6G – 1 1/2" C	(4) #1 & (1) #6G – 1 1/2" C	(4) #1 & (1) #6G – 1 1/2" C	(5) #1/0 & (1) #6G – 2" C
150		(3) #1/0 & (1) #6G – 1 1/2" C	(3) #1/0 & (1) #6G – 1 1/2" C	(4) #1/0 & (1) #6G – 2" C	(4) #1/0 & (1) #6G – 2" C	(5) #2/0 & (1) #6G – 2" C
175		(3) #2/0 & (1) #6G – 2" C	(3) #2/0 & (1) #6G – 2" C	(4) #2/0 & (1) #6G – 2" C	(4) #2/0 & (1) #4G – 2" C	(5) #3/0 & (1) #6G – 2" C
200		(3) #3/0 & (1) #6G – 2" C	(3) #3/0 & (1) #6G – 2" C	(4) #3/0 & (1) #6G – 2" C	(4) #3/0 & (1) #4G – 2" C	(5) 250 kcmil & (1) #4G – 3" C
225		(3) #4/0 & (1) #4G – 2" C	(3) #4/0 & (1) #4G – 2" C	(4) #4/0 & (1) #4G – 2 1/2" C	(4) #4/0 & (1) #2G – 2 1/2" C	(5) 350 kcmil & (1) #4G – 3" C
250		(3) 250 kcmil & (1) #4G – 2 1/2" C	(3) 250 kcmil & (1) #4G – 2 1/2" C	(4) 250 kcmil & (1) #4G – 3" C	(4) 250 kcmil & (1) #2G – 3" C	(5) 350 kcmil & (1) #4G – 3" C
300		(3) 350 kcmil & (1) #4G – 2 1/2" C	(3) 350 kcmil & (1) #4G – 2 1/2" C	(4) 350 kcmil & (1) #4G – 3" C	(4) 350 kcmil & (1) #2G – 3" C	(5) 500 kcmil & (1) #3G – 3 1/2" C
350		(3) 500 kcmil & (1) #3G – 3" C	(3) 500 kcmil & (1) #3G – 3" C	(4) 500 kcmil & (1) #3G – 3 1/2" C	(4) 500 kcmil & (1) #1/0G – 3 1/2" C	(5) 600 kcmil & (1) #3G – 3 1/2" C
400		(3) 500 kcmil & (1) #3G – 3" C	(3) 500 kcmil & (1) #3G – 3" C	(4) 500 kcmil & (1) #3G – 3 1/2" C	(4) 500 kcmil & (1) #1/0G – 3 1/2" C	TWO (2) SETS OF (5) 250 kcmil & (1) #2G – 3" C
450		TWO (2) SETS OF (3) #4/0 & (1) #2G – 2" C	TWO (2) SETS OF (3) #4/0 & (1) #2G – 2" C	TWO (2) SETS OF (4) 4/0 & (1) #2G – 2 1/2" C	TWO (2) SETS OF (4) 4/0 & (1) #1/0G – 2 1/2" C	TWO (2) SETS OF (5) 350 kcmil & (1) #1G – 3" C
500		TWO (2) SETS OF (3) 250 kcmil & (1) #2G – 2 1/2" C	TWO (2) SETS OF (3) 250 kcmil & (1) #2G – 2 1/2" C	TWO (2) SETS OF (4) 250 kcmil & (1) #2G – 3" C	TWO (2) SETS OF (4) 250 kcmil & (1) #2/0G – 3" C	TWO (2) SETS OF (5) 350 kcmil & (1) #1G – 3" C
600		TWO (2) SETS OF (3) 350 kcmil & (1) #1G – 3" C	TWO (2) SETS OF (3) 350 kcmil & (1) #1G – 3" C	TWO (2) SETS OF (4) 350 kcmil & (1) #1G – 3" C	TWO (2) SETS OF (4) 350 kcmil & (1) #2/0G – 3" C	TWO (2) SETS OF (5) 500 kcmil & (1) #1G – 3" C
800		TWO (2) SETS OF (3) 500 kcmil & (1) #1/0G – 3" C	TWO (2) SETS OF (3) 500 kcmil & (1) #1/0G – 3" C	TWO (2) SETS OF (4) 500 kcmil & (1) #1/0G – 3 1/2" C	TWO (2) SETS OF (4) 500 kcmil & (1) #2/0G – 3 1/2" C	THREE (3) SETS OF (5) 500 kcmil & (1) #1/0G – 3 1/2" C
900			THREE (3) SETS OF (3) 350 kcmil & (1) #2/0G – 3" C	THREE (3) SETS OF (4) 350 kcmil & (1) #2/0G – 3" C	THREE (3) SETS OF (4) 350 kcmil & (1) #2/0G – 3" C	FOUR (4) SETS OF (5) 350 kcmil & (1) #2/0G – 3" C
1000			THREE (3) SETS OF (3) 500 kcmil & (1) #2/0G – 3" C	THREE (3) SETS OF (4) 500 kcmil & (1) #2/0G – 3 1/2" C	THREE (3) SETS OF (4) 500 kcmil & (1) #2/0G – 3 1/2" C	FIVE (5) SETS OF (5) 250 kcmil & (1) #2/0G – 3" C
1200			FOUR (4) SETS OF (3) 350 kcmil & (1) #3/0G – 3" C	FOUR (4) SETS OF (4) 350 kcmil & (1) #3/0G – 3" C	FOUR (4) SETS OF (4) 350 kcmil & (1) #3/0G – 3" C	FOUR (4) SETS OF (5) 500 kcmil & (1) #3/0G – 3 1/2" C
1600			FIVE (5) SETS OF (3) 500 kcmil & (1) #4/0G – 3" C	FIVE (5) SETS OF (4) 500 kcmil & (1) #4/0G – 3 1/2" C	FIVE (5) SETS OF (4) 500 kcmil & (1) #3/0G – 3 1/2" C	SIX (6) SETS OF (5) 500 kcmil & (1) #4/0G – 3 1/2" C
2000			SIX (6) SETS OF (3) 500 kcmil & (1) 500 kcmil G – 3 1/2" C	SIX (6) SETS OF (4) 500 kcmil & (1) 500 kcmil G – 3 1/2" C	SIX (6) SETS OF (4) 500 kcmil & (1) #3/0G – 3 1/2" C	SEVEN (7) SETS OF (5) 500 kcmil & (1) 250 kcmil G – 3 1/2" C
2500			SEVEN (7) SETS OF (3) 500 kcmil & (1) 350 kcmil G – 3 1/2" C	SEVEN (7) SETS OF (4) 500 kcmil & (1) 350 kcmil G – 3 1/2" C	SEVEN (7) SETS OF (4) 500 kcmil & (1) #3/0G – 3 1/2" C	NINE (9) SETS OF (5) 500 kcmil & (1) 350 kcmil G –4" C
3000			EIGHT (8) SETS OF (3) 500 kcmil & (1) 500 kcmil G – 3 1/2" C	EIGHT (8) SETS OF (4) 500 kcmil & (1) 500 kcmil G – 3 1/2" C	EIGHT (8) SETS OF (4) 500 kcmil & (1) #3/0G – 3 1/2" C	TEN (10) SETS OF (5) 500 kcmil & (1) 500 kcmil G – 4" C
3500			TEN (10) SETS OF (3) 500 kcmil & (1) 500 kcmil G – 3 1/2" C	TEN (10) SETS OF (4) 500 kcmil & (1) 500 kcmil G – 3 1/2" C	TEN (10) SETS OF (4) 500 kcmil & (1) #3/0G – 3 1/2" C	TWELVE (12) SETS OF (5) 500 kcmil & (1) 500 kcmil G – 4" C
4000			ELEVEN (11) SETS OF (3) 500 kcmil & (1) 500 kcmil G – 3 1/2" C	ELEVEN (11) SETS OF (4) 500 kcmil & (1) 500 kcmil G – 3 1/2" C	ELEVEN (11) SETS OF (4) 500 kcmil & (1) #3/0G – 3 1/2" C	FOURTEEN (14) SETS OF (5) 500 kcmil & (1) 500 kcmil G – 4" C

NOTES:

1. CONDUIT SIZES FOR TYPE THHN/THWN" CONDUCTORS ONLY. OTHER CONDUCTOR TYPES MAY REQUIRE INCREASED CONDUIT SIZE.
2. TOP NUMBER REFERS TO COLUMNS, BOTTOM NUMBER REFERS TO ROWS.
3. GROUND CONDUCTOR SPECIFIED IS EQUIPMENT GROUND PER NEC.
4. PROVIDE A 2 HR FIRE RATED FEEDER (TYPE RHH)

TRANSFORMER SCHEDULE

TAG	PRI: VOLTAGE	SEC: VOLTAGE	SIZE – KVA	COIL	TEMP RISE	TAPS	MOUNTING	REMARKS
T–1	480V, 3ø, 3W	208/120V, 3ø, 4W	300	COPPER	115°C	6AN, 2BN	FLOOR ON PAD	K13 RATED
T–2	480V, 3ø, 3W	208/120V, 3ø, 4W	45	COPPER	115°C	6AN, 2BN	FLOOR ON PAD	
T–3	480V, 3ø, 3W	208/120V, 3ø, 4W	75	COPPER	115°C	6AN, 2BN	FLOOR ON PAD	K13 RATED
T–4	480V, 3ø, 3W	208/120V, 3ø, 4W	75	COPPER	115°C	6AN, 2BN	FLOOR ON PAD	
T–5	480V, 3ø, 3W	208/120V, 3ø, 4W	45	COPPER	115°C	6AN, 2BN	FLOOR ON PAD	

FOR CONSTRUCTION
FULLY SPRINKLERED

Revisions: Date

CONSULTANTS:

HDR Architecture, Inc.
1101 King Street | Suite 400 | Alexandria, Virginia 22314-2944 | 703.518.8500

ARCHITECT/ENGINEERS:

ARCHITECTURE ENGINEERING INTERIOR DESIGN DESIGN/BUILD
ASTORINO
227 Fort Pitt Boulevard Pittsburgh Pennsylvania 15222
TEL 412 765 1700 FAX 412 765 1711 www.astorino.com

Drawing Title: **Transformer and Feeder Schedules**

Approved: Project Director

Project Title: **VA CARES CONSOLIDATION VAMC, PITTSBURGH, PA RESEARCH OFFICE BLDG.**

Location: **VAPHS UNIVERSITY DRIVE**

Date | Checked: **TMR** | Drawn: **LLG**

Project Number: **646CA2500R**

Building Number: **30**

Drawing Number: **EP6-104**

Dwg. of

Office of Facilities Management

Department of Veterans Affairs

VA FORM 08-6231, OCT 1978

P:\Project\20054250\00\CAD\UNIVERSITY DRIVE\Research Office Building\Electrical\EP6-104.dwg SSTR08EL 08/19/10 10:12:19

PANELBOARD '30-BLA'

POS NO	LOAD DESCRIPTION	WIRE SIZE	LOAD Kva	C/B SIZE	PHASE A	PHASE B	PHASE C	C/B SIZE	LOAD Kva	WIRE SIZE	LOAD DESCRIPTION	POS NO
1	RECEPTACLE MECHANICAL ROOM	12	0.60	20/1	*			20/1	1.0	12	RECEPTACLE - TELECOM	2
3	RECEPTACLE ELEVATOR LOBBY	12	0.40	20/1		*		20/1	1.0	12	RECEPTACLE - TELECOM	4
5	RECEPTACLE MECHANICAL ROOM	12	.080	20/1			*				SPACE	6
7	RECEPTACLE MECHANICAL ROOM	12	0.60	20/1	*						SPACE	8
9	SPACE					*					SPACE	10
11	SPACE						*				SPACE	12
13	SPACE				*						SPACE	14
15	SPACE					*					SPACE	16
17	SPACE						*				SPACE	18
19	SPARE			20/1	*			20/1			SPARE	20
21	SPARE			20/1		*		20/1			SPARE	22
23	SPARE			20/1			*	20/1			SPARE	24
25	SPARE			20/1	*			20/1			SPARE	26
27	SPARE			20/1		*		20/1			SPARE	28
29	SPARE			20/1			*	20/1			SPARE	30
31	SPARE			20/1	*			20/1			SPARE	32
33	SPARE			20/1		*		20/1			SPARE	34
35	SPARE			20/1			*	20/1			SPARE	36
37	SPARE			20/1	*			20/1			SPARE	38
39	SPARE			20/1		*		30/2	2.0	10	RECEPTALCE - TELECOM	40
41	SPARE			20/1			*		2.0			42

VOLTAGE: 208/120V 3Ø, 4W	PHASE A 2.20	LOCATION:	BASEMENT
SIZE/TYPE BUS: 100A A.I.C.: 22,000	PHASE B 3.40	MOUNTING:	SURFACE
SIZE/TYPE MAINS: 100A, 3P MCB	PHASE C 2.08	FED FROM:	DSBL
LUGS:	SUB TOTAL (kva) 7.68	REMARKS:	

PANELBOARD '30-LSBLA'

POS NO	LOAD DESCRIPTION	WIRE SIZE	LOAD Kva	C/B SIZE	PHASE A	PHASE B	PHASE C	C/B SIZE	LOAD Kva	WIRE SIZE	LOAD DESCRIPTION	POS NO
1	LIGHTING - ELEVATOR CAR	10	1.2	20/1	*			20/1	.080	10	GROUND FLOOR FACP	2
3	LIGHTING - ELEVATOR CAR	10	1.2	20/1		*		20/1	1.0	10	DOOR ACCESS CONTROLLERS BASEMENT	4
5	DRY PIP VALVE	12	1.0	20/1			*	20/1	1.0	10	SECURITY PANEL BASEMENT	6
7	NURSE CALL SYSTEM	10	.5	20/1	*			20/1	1.0	10	DOOR ACCESS CONTROLLERS GRD FLOOR	8
9	SPARE			20/1		*		20/1	1.0	10	SECURITY PANEL GROUND FLOOR	10
11	DOOR MOTOR OPERATOR - GROUND FLOOR	10	1.0	20/1			*	20/1	1.0	10	DOOR ACCESS CONTROLLERS GRD FLOOR	12
13	DOOR MOTOR OPERATOR - GROUND FLOOR	10	1.0	20/1	*			30/1	1.2	8	SUMP PUMP BASEMENT	14
15	FIRE ALARM CONTROL PANEL - BASEMENT	12	.5	20/1		*		30/1	1.2	10	SUMP PUMP GROUND FLOOR	16
17	SPACE						*	20/1	1.0	12	AHU - LIGHTING	18
19	SPARE			20/1	*			20/1	1.0	12	AHU - LIGHTING	20
21	SPARE			20/1		*		20/1			SPARE	22
23	SPARE			20/1			*	20/1			SPARE	24
25	SPARE			20/1	*			20/1			SPARE	26
27	SPARE			20/1		*		20/1			SPARE	28
29	SPARE			20/1			*	20/1			SPARE	30
31	SPARE			20/1	*			20/1			SPARE	32
33	SPARE			20/1		*		20/1			SPARE	34
35	SPARE			20/1			*	20/1			SPARE	36
37	SPARE			20/1	*			20/1			SPARE	38
39	SPARE			20/1		*		20/1			SPARE	40
41	SPARE			20/1			*	20/1			SPARE	42

VOLTAGE: 208/120V 3Ø, 4W	PHASE A 5.98	LOCATION:	BASEMENT
SIZE/TYPE BUS: 225A A.I.C.: 22,000	PHASE B 4.90	MOUNTING:	SURFACE
SIZE/TYPE MAINS: 175A, 3P MCB	PHASE C 5.00	FED FROM:	ATS-LS
LUGS:	SUB TOTAL (kva) 15.88	REMARKS:	THE MAIN CIRCUIT BREAKER AND ALL BRANCH CIRCUIT BREAKERS SHALL BY CH TYPE BAB

PANELBOARD '30-BLB'

POS NO	LOAD DESCRIPTION	WIRE SIZE	LOAD Kva	C/B SIZE	PHASE A	PHASE B	PHASE C	C/B SIZE	LOAD Kva	WIRE SIZE	LOAD DESCRIPTION	POS NO
1	RECEPTACLE - MECHANICAL ROOM	12	0.80	20/1	*			20/1	.5	12	HEAT TRACE	2
3	RECEPTACLE - MECHANICAL ROOM	12	0.80	20/1		*					SPACE	4
5	RECEPTACLE - ELEVATOR MACHINE ROOM	12	0.80	20/1			*				SPACE	6
7	SPACE				*						SPACE	8
9	SPACE					*					SPACE	10
11	SPACE						*				SPACE	12
13	SPACE				*						SPACE	14
15	SPACE					*					SPACE	16
17	SPACE						*				SPACE	18
19	SPARE			20/1	*			20/1			SPARE	20
21	SPARE			20/1		*		20/1			SPARE	22
23	SPARE			20/1			*	20/1			SPARE	24
25	SPARE			20/1	*			20/1			SPARE	26
27	SPARE			20/1		*		20/1			SPARE	28
29	SPARE			20/1			*	20/1			SPARE	30
31	SPARE			20/1	*			20/1			SPARE	32
33	SPARE			20/1		*		20/1			SPARE	34
35	SPARE			20/1			*	20/1			SPARE	36
37	SPARE			20/1	*			20/1			SPARE	38
39	SPARE			20/1		*		20/1			SPARE	40
41	SPARE			20/1			*	20/1			SPARE	42

VOLTAGE: 208/120V 3Ø, 4W	PHASE A 1.30	LOCATION:	BASEMENT
SIZE/TYPE BUS: 100A A.I.C.: 22,000	PHASE B 0.80	MOUNTING:	SURFACE
SIZE/TYPE MAINS: 225A, 3P MCB	PHASE C 0.80	FED FROM:	DSBL
LUGS:	SUB TOTAL (kva) 2.90	REMARKS:	

NOTE:

PROVIDE DOOR-IN-DOOR TYPE TRIMS FOR ALL PANELBOARDS

FOR CONSTRUCTION
FULLY SPRINKLERED

Revisions:	Date

CONSULTANTS:

HDR

HDR Architecture, Inc.

1101 King Street | Suite 400 | Alexandria, Virginia 22314-2944 | 703.518.8500

ARCHITECT/ENGINEERS:

ARCHITECTURE ENGINEERING INTERIOR DESIGN DESIGN/BUILD

ASTORINO

227 Fort Pitt Boulevard Pittsburgh Pennsylvania 15222
TEL 412 765 1700 FAX 412 765 1711 www.astorino.com

Drawing Title: **Electrical Panelboard Schedules - Basement**

Approved: Project Director

Project Title: **VA CARES CONSOLIDATION VAMC, PITTSBURGH, PA RESEARCH OFFICE BLDG.**

Location: **VAPHS UNIVERSITY DRIVE**

Date: **08-18-10** | Checked: **TMR** | Drawn: **LLG**

Project Number: **646CA2500R**

Building Number: **30**

Drawing Number: **EP6-201**

Dwg. -- of --

Office of Facilities Management

Department of Veterans Affairs

VA FORM 08-6231, OCT 1978

P:\Project\200542500\CAD\UNIVERSITY DRIVE\Research Office Building\Electrical\EP6-201.dwg LGARDNER 10/29/09 : 09:46:47

PANELBOARD '30-EQBLA'

POS NO	LOAD DESCRIPTION	WIRE SIZE	LOAD Kva	C/B SIZE	PHASE A	PHASE B	PHASE C	C/B SIZE	LOAD Kva	WIRE SIZE	LOAD DESCRIPTION	POS NO
1	RECEPTACLE - TELECOM ROOM	12	1.2	20/1	*			20/1	1.2	4	EXTERIOR ARM GATE OPERATOR	2
3	RECEPTACLE - TELECOM ROOM	12	1.2	20/1		*		20/1	1.2	4	EXTERIOR ARM GATE OPERATOR	4
5	RECEPTACLE - TELECOM ROOM	12	1.2	20/1			*	20/1	1.2	4	EXTERIOR ARM GATE OPERATOR	6
7	RECEPTACLE - TELECOM ROOM	12	1.2	20/1	*			20/1	1.2	4	EXTERIOR ARM GATE OPERATOR	8
9	SPARE	12	1.2	20/1		*		20/1	1.2	4	EXTERIOR ARM GATE OPERATOR	10
11	SECURITY PANELS	12	1.2	20/1			*				SPACE	12
13	SPACE				*						SPACE	14
15	SPACE					*					SPACE	16
17	SPACE						*				SPACE	18
19	SPARE			20/1	*			20/1			SPARE	20
21	SPARE			20/1		*		20/1			SPARE	22
23	SPARE			20/1			*	20/1			SPARE	24
25	SPARE			20/1	*			20/1			SPARE	26
27	SPARE			20/1		*		20/1			SPARE	28
29	SPARE			20/1			*	20/1			SPARE	30
31	SPARE			20/1	*			20/1			SPARE	32
33	SPARE			20/1		*		20/1			SPARE	34
35	SPARE			20/1			*	30/2	2.0	10	RECEPTACLE - TELECOM	36
37	SPARE			20/1	*				2.0			38
39	SPARE			20/1		*		30/2	2.0	10	RECEPTACLE - TELECOM	40
41	SPARE			20/1			*		2.0			42

VOLTAGE: 208/120V 3Ø, 4W		PHASE A 6.80	LOCATION: BASEMENT
SIZE/TYPE BUS: 400A	A.I.C.: 22,000	PHASE B 6.80	MOUNTING: SURFACE
SIZE/TYPE MAINS: 300A-3P MCB		PHASE C 7.60	FED FROM: EQDPH VIA T-4
LUGS: FEED-THRU		SUB TOTAL (kva) 21.20	REMARKS:

PANELBOARD '30-EQBLB'

POS NO	LOAD DESCRIPTION	WIRE SIZE	LOAD Kva	C/B SIZE	PHASE A	PHASE B	PHASE C	C/B SIZE	LOAD Kva	WIRE SIZE	LOAD DESCRIPTION	POS NO
1	RECEPTACLE MECHANICAL ROOM	12	0.60	20/1	*			20/1	0.40	12	DAMPER	2
3	RECEPTACLE MECHANICAL ROOM	12	0.60	20/1		*		20/1	0.80	12	RECEPTACLE - ELECTRICAL ROOM	4
5	RECEPTACLE FIRE PUMP ROOM	12	0.80	20/1			*	20/1	0.80	12	RECEPTACLE - ELECTRICAL ROOM	6
7	RECEPTACLE ELEVATOR PIT	12	0.5	20/1	*			20/1	0.80	12	RECEPTACLE - ELECTRICAL ROOM	8
9	ATC PANEL	12	0.5	20/1		*		20/1	0.1	12	CABINET HEATER	10
11	SPACE						*				SPACE	12
13	SPACE				*						SPACE	14
15	SPACE					*					SPACE	16
17	SPACE						*				SPACE	18
19	SPARE			20/1	*			20/1			SPARE	20
21	SPARE			20/1		*		20/1			SPARE	22
23	SPARE			20/1			*	20/1			SPARE	24
25	SPARE			20/1	*			20/1			SPARE	26
27	SPARE			20/1		*		20/1			SPARE	28
29	SPARE			20/1			*	20/1			SPARE	30
31	SPARE			20/1	*			20/1			SPARE	32
33	SPARE			20/1		*		20/1			SPARE	34
35	SPARE			20/1			*	20/2	0.10	12	REFRIGERANT CENTRALIZED CONROLLER	36
37	SPARE			20/1	*				0.10			38
39	EVAPORATORS	12	0.60	20/2		*		20/2	1.0	12	REFRIGERANT BRANCH CONTROLLER #2	40
41			0.60				*		1.0			42

VOLTAGE: 208/120V 3Ø, 4W		PHASE A 2.40	LOCATION: BASEMENT
SIZE/TYPE BUS: 400A	A.I.C.: 22,000	PHASE B 3.60	MOUNTING: SURFACE
SIZE/TYPE MAINS: 300A-3P MCB		PHASE C 3.30	FED FROM: EQDPH VIA T-4
LUGS:		SUB TOTAL (kva) 9.30	REMARKS:

NOTE:

PROVIDE DOOR-IN-DOOR TYPE TRIMS FOR ALL PANELBOARDS

PANELBOARD '30-BHA'

POS NO	LOAD DESCRIPTION	WIRE SIZE	LOAD Kva	C/B SIZE	PHASE A	PHASE B	PHASE C	C/B SIZE	LOAD Kva	WIRE SIZE	LOAD DESCRIPTION	POS NO
1	LIGHTING - ELECTRICAL ROOM	12	1.044	20/1	*			20/1	1.2	6	EXTERIOR SIGN	2
3	LIGHTING - MECHANICAL ROOM	12	1.47	20/1		*					SPACE	4
5	LIGHTING - MECHANICAL ROOM	12	2.262	20/1			*				SPACE	6
7	SPACE				*						SPACE	8
9	SPACE					*					SPACE	10
11	SPACE						*				SPACE	12
13	SPACE				*						SPACE	14
15	SPACE					*					SPACE	16
17	SPACE						*				SPACE	18
19	SPARE			20/1	*			20/1			SPARE	20
21	SPARE			20/1		*		20/1			SPARE	22
23	SPARE			20/1			*	20/1			SPARE	24
25	SPARE			20/1	*			20/1			SPARE	26
27	SPARE			20/1		*		20/1			SPARE	28
29	SPARE			20/1			*	20/1			SPARE	30
31	SPARE			20/1	*			20/1			SPARE	32
33	SPARE			20/1		*		20/1			SPARE	34
35	SPARE			20/1			*	20/1			SPARE	36
37	SPARE			20/1	*			20/1			SPARE	38
39	SPARE			20/1		*		20/1			SPARE	40
41	SPARE			20/1			*	20/1			SPARE	42

VOLTAGE: 480/277V 3Ø, 4W		PHASE A 2.24	LOCATION: BASEMENT
SIZE/TYPE BUS: 225A	A.I.C.: 35,000	PHASE B 1.47	MOUNTING: SURFACE
SIZE/TYPE MAINS: 225A-3P MCB		PHASE C 2.26	FED FROM: DSBH
LUGS:		SUB TOTAL (kva) 5.98	REMARKS:

PANELBOARD '30-LSBHA'

POS NO	LOAD DESCRIPTION	WIRE SIZE	LOAD Kva	C/B SIZE	PHASE A	PHASE B	PHASE C	C/B SIZE	LOAD Kva	WIRE SIZE	LOAD DESCRIPTION	POS NO
1	LIGHTING - ELECTRICAL ROOM	12	.738	20/1	*			20/1	0.2	12	LIGHTING - STAIR TOWER 1	2
3	LIGHTING - MECHANICAL ROOM	12	.904	20/1		*		20/1	0.3	12	LIGHTING - STAIR TOWER 2	4
5	LIGHTING - MECHANICAL ROOM	12	.879	20/1			*	20/1			SPARE	6
7	SITE LIGHTING - POLE	8	1.65	20/1	*			20/1			SPARE	8
9	SITE LIGHTING - POLE	8	1.65	20/1		*		20/1			SPARE	10
11	SITE LIGHTING - POLE	8	1.65	20/1			*	20/1			SPARE	12
13	SITE LIGHTING - POLE	8	1.65	20/1	*			20/1			SPARE	14
15	SITE LIGHTING - BOLLARD	8	.825	20/1		*		20/1			SPARE	16
17	SPARE			20/1			*	20/1			SPARE	18
19	SPARE			20/1	*			20/1			SPARE	20
21	SPARE			20/1		*					SPACE	22
23	SPARE			20/1			*				SPACE	24
25	SPARE			20/1	*						SPACE	26
27	SPARE			20/1		*					SPACE	28
29	SPARE			20/1			*				SPACE	30
31	PANELBOARD - LSBLA VIA T-2	4	5.48	70/3	*			100/3	1.2	1	PANELBOARD - LS1HA	32
33			5.4			*			1.0			34
35			4.0				*		.65			36
37	PANELBOARD - LSGHA	1	.8	100/3	*			225/3	6.6	4/0	PANELBOARD - LS2HA	38
39			.5			*			7.0			40
41			1.3				*		12.69			42

VOLTAGE: 480/277V 3Ø, 4W		PHASE A 18.32	LOCATION: BASEMENT
SIZE/TYPE BUS: 400A	A.I.C.: 35,000	PHASE B 17.58	MOUNTING: SURFACE
SIZE/TYPE MAINS: MLO		PHASE C 21.17	FED FROM: ATS-LS
LUGS:		SUB TOTAL (kva) 57.07	REMARKS:

FOR CONSTRUCTION
FULLY SPRINKLERED

Revisions:	Date

CONSULTANTS:

HDR

HDR Architecture, Inc.

1101 King Street | Suite 400 | Alexandria, Virginia 22314-2944 | 703.518.8500

ARCHITECT/ENGINEERS:

ARCHITECTURE ENGINEERING INTERIOR DESIGN DESIGN/BUILD

ASTORINO

227 Fort Pitt Boulevard Pittsburgh Pennsylvania 15222
TEL 412 765 1700 FAX 412 765 1711 www.astorino.com

Drawing Title: **Electrical Panelboard Schedules - Basement**

Approved: Project Director

Project Title: **VA CARES CONSOLIDATION VAMC, PITTSBURGH, PA RESEARCH OFFICE BLDG.**

Location: **VAPHS UNIVERSITY DRIVE**

Date: **08-18-10** | Checked: **TMR** | Drawn: **LLG**

Project Number: **646CA2500R**

Building Number: **30**

Drawing Number: **EP6-202**

Dwg. -- of --

Office of Facilities Management

Department of Veterans Affairs

VA FORM 08-6231, OCT 1978

P:\Project\20054251.00\CAD\UNIVERSITY DRIVE\Research Office Building\Electrical\EP6-202.dwg SSTROBEL 11/17/09 - 10:58:31

PANELBOARD '30-GLA'

POS NO	LOAD DESCRIPTION	WIRE SIZE	LOAD Kva	C/B SIZE	PHASE A	PHASE B	PHASE C	C/B SIZE	LOAD Kva	WIRE SIZE	LOAD DESCRIPTION	POS NO
1	RECEPTACLE - DISTRIBUTION MODULE	12	1.20	20/1	*			20/1	0.80	12	RECEPTACLE - DISTRIBUTION MODULE	2
3	RECEPTACLE - DISTRIBUTION MODULE	12	1.20	20/1		*		20/1	0.80	12	RECEPTACLE - DISTRIBUTION MODULE	4
5	RECEPTACLE - DISTRIBUTION MODULE	12	1.20	20/1			*	20/1	0.80	12	RECEPTACLE - DISTRIBUTION MODULE	6
7	RECEPTACLE - DISTRIBUTION MODULE	12	1.20	20/1	*			20/1		12	RECEP - DIST MODULE - SPARE	8
9	RECEPTACLE - DISTRIBUTION MODULE	12	1.20	20/1		*		20/1		12	RECEP - DIST MODULE - SPARE	10
11	RECEPTACLE - DISTRIBUTION MODULE	12	1.20	20/1			*	20/1		12	RECEP - DIST MODULE - SPARE	12
13	RECEPTACLE - DISTRIBUTION MODULE	12	1.20	20/1	*			20/1		12	RECEP - DIST MODULE - SPARE	14
15	RECEPTACLE - DISTRIBUTION MODULE	12	1.20	20/1		*		20/1		12	RECEP - DIST MODULE - SPARE	16
17	RECEPTACLE - DISTRIBUTION MODULE	12	1.20	20/1			*	20/1		12	RECEP - DIST MODULE - SPARE	18
19	RECEP - DIST MODULE - SPARE	12		20/1	*			20/1		12	RECEP - DIST MODULE - SPARE	20
21	RECEP - DIST MODULE - SPARE	12		20/1		*		20/1		12	RECEP - DIST MODULE - SPARE	22
23	RECEP - DIST MODULE - SPARE	12		20/1			*	20/1		12	RECEP - DIST MODULE - SPARE	24
25	RECEP - DIST MODULE - SPARE	12		20/1	*			20/1		12	RECEP - DIST MODULE - SPARE	26
27	RECEP - DIST MODULE - SPARE	12		20/1		*		20/1		12	RECEP - DIST MODULE - SPARE	28
29	RECEP - DIST MODULE - SPARE	12		20/1			*	20/1		12	RECEP - DIST MODULE - SPARE	30
31	RECEPTACLE - TELECOM	12	1.0	20/1	*			20/1	0.80	12	RECEPTACLE - OPEN AREA	32
33	RECEPTACLE - TELECOM	12	1.0	20/1		*		20/1	0.80	12	RECEPTACLE - OPEN AREA	34
35	SPARE			20/1			*	20/1	0.20	12	UNIT HEATER	36
37	SPARE			20/1	*			20/1	0.60	12	CABINET HEATER	38
39	SPARE			20/1		*		30/2	2.0	10	RECEPTACLE - TELECOM	40
41	SPARE			20/1			*		2.0			42

VOLTAGE: 208/120V 3Ø, 4W		PHASE A	6.80	LOCATION:	GROUND FLOOR
SIZE/TYPE BUS: 225A	A.I.C.:22,000	PHASE B	8.20	MOUNTING:	SURFACE
SIZE/TYPE MAINS: 225A-3P MCB		PHASE C	6.60	FED FROM:	DSBL
LUGS:		SUB TOTAL (kva)	21.60	REMARKS:	200% NEUTRAL

PANELBOARD '30-GLB'

POS NO	LOAD DESCRIPTION	WIRE SIZE	LOAD Kva	C/B SIZE	PHASE A	PHASE B	PHASE C	C/B SIZE	LOAD Kva	WIRE SIZE	LOAD DESCRIPTION	POS NO
1	RECEPTACLE - DISTRIBUTION MODULE	12	1.20	20/1	*			20/1	0.80	12	RECEPTACLE - DISTRIBUTION MODULE	2
3	RECEPTACLE - DISTRIBUTION MODULE	12	1.20	20/1		*		20/1	1.00	12	RECEPTACLE - DISTRIBUTION MODULE	4
5	RECEPTACLE - DISTRIBUTION MODULE	12	1.20	20/1			*	20/1	1.00	12	RECEPTACLE - DISTRIBUTION MODULE	6
7	RECEPTACLE - DISTRIBUTION MODULE	12	1.20	20/1	*			20/1		12	RECEP - DIST MODULE - SPARE	8
9	RECEPTACLE - DISTRIBUTION MODULE	12	1.20	20/1		*		20/1		12	RECEP - DIST MODULE - SPARE	10
11	RECEPTACLE - DISTRIBUTION MODULE	12	0.60	20/1			*	20/1		12	RECEP - DIST MODULE - SPARE	12
13	RECEPTACLE - DISTRIBUTION MODULE	12	0.60	20/1	*			20/1		12	RECEP - DIST MODULE - SPARE	14
15	RECEPTACLE - DISTRIBUTION MODULE	12	1.20	20/1		*		20/1		12	RECEP - DIST MODULE - SPARE	16
17	RECEPTACLE - DISTRIBUTION MODULE	12	1.20	20/1			*	20/1		12	RECEP - DIST MODULE - SPARE	18
19	RECEPTACLE - DISTRIBUTION MODULE	12	0.60	20/1	*			20/1		12	RECEP - DIST MODULE - SPARE	20
21	RECEPTACLE - DISTRIBUTION MODULE	12	0.60	20/1		*		20/1		12	RECEP - DIST MODULE - SPARE	22
23	RECEP - DIST MODULE - SPARE	12		20/1			*	20/1		12	RECEP - DIST MODULE - SPARE	24
25					*			20/1	0.80	12	RECEPTACLE - TOILET ROOM	26
27						*		20/1	1.20	12	RECEPTACLE - EWC	28
29							*	20/1	0.80	12	RECEPTACLE - LOBBY SEC	30
31	SPARE			20/1	*			20/1	0.60	12	RECEPTACLE - LOBBY	32
33	SPARE			20/1		*		20/1	0.60	12	RECEPTACLE - OPEN AREA	34
35	SPARE			20/1			*	20/1	1.20	12	RECEPTACLE - OPEN AREA	36
37	SPARE			20/1	*			20/1			SPARE	38
39	SPARE			20/1		*		20/1			SPARE	40
41	SPARE			20/1			*	20/1			SPARE	42

VOLTAGE: 208/120V 3Ø, 4W		PHASE A	5.80	LOCATION:	GROUND FLOOR
SIZE/TYPE BUS: 225A	A.I.C.:22,000	PHASE B	7.00	MOUNTING:	SURFACE
SIZE/TYPE MAINS: 225A-3P MCB		PHASE C	6.00	FED FROM:	DSBL
LUGS:		SUB TOTAL (kva)	18.80	REMARKS:	200% NEUTRAL

NOTE:

PROVIDE DOOR-IN-DOOR TYPE TRIMS FOR ALL PANELBOARDS

PANELBOARD '30-GLC'

POS NO	LOAD DESCRIPTION	WIRE SIZE	LOAD Kva	C/B SIZE	PHASE A	PHASE B	PHASE C	C/B SIZE	LOAD Kva	WIRE SIZE	LOAD DESCRIPTION	POS NO
1	RECEPTACLE - DISTRIBUTION MODULE	12	1.20	20/1	*			20/1	1.20	12	RECEPTACLE - DISTRIBUTION MODULE	2
3	RECEPTACLE - DISTRIBUTION MODULE	12	0.80	20/1		*		20/1	1.20	12	RECEPTACLE - DISTRIBUTION MODULE	4
5	RECEPTACLE - DISTRIBUTION MODULE	12	1.20	20/1			*	20/1	1.20	12	RECEPTACLE - DISTRIBUTION MODULE	6
7	RECEPTACLE - DISTRIBUTION MODULE	12	1.20	20/1	*			20/1	1.20	12	RECEPTACLE - DISTRIBUTION MODULE	8
9	RECEPTACLE - DISTRIBUTION MODULE	12	1.20	20/1		*		20/1	1.20	12	RECEPTACLE - DISTRIBUTION MODULE	10
11	RECEPTACLE - DISTRIBUTION MODULE	12	1.20	20/1			*	20/1	1.20	12	RECEPTACLE - DISTRIBUTION MODULE	12
13	RECEPTACLE - DISTRIBUTION MODULE	12	0.40	20/1	*			20/1	1.20	12	RECEPTACLE - DISTRIBUTION MODULE	14
15	RECEPTACLE - DISTRIBUTION MODULE	12	0.80	20/1		*		20/1	0.60	12	RECEPTACLE - DISTRIBUTION MODULE	16
17	RECEPTACLE - DISTRIBUTION MODULE	12	1.00	20/1			*	20/1	0.60	12	RECEPTACLE - DISTRIBUTION MODULE	18
19	RECEPTACLE - DISTRIBUTION MODULE	12	1.20	20/1	*			20/1	0.60	12	RECEPTACLE - DISTRIBUTION MODULE	20
21	RECEPTACLE - DISTRIBUTION MODULE	12	1.20	20/1		*		20/1		12	RECEP - DIST MODULE - SPARE	22
23	RECEPTACLE - DISTRIBUTION MODULE	12	1.20	20/1			*	20/1		12	RECEP - DIST MODULE - SPARE	24
25	RECEPTACLE - DISTRIBUTION MODULE	12	1.20	20/1	*			20/1		12	RECEP - DIST MODULE - SPARE	26
27	RECEPTACLE - DISTRIBUTION MODULE	12	1.20	20/1		*		20/1		12	RECEP - DIST MODULE - SPARE	28
29	RECEPTACLE - DISTRIBUTION MODULE	12	1.20	20/1			*	20/1		12	RECEP - DIST MODULE - SPARE	30
31	SHADE MOTORS			20/1	*			20/1	0.80	12	RECEPTACLE - EXTERIOR	32
33	SHADE BUS/SUPPLY/REPEATER			20/1		*		20/1			SPARE	34
35	SPARE			20/1			*	20/1			SPARE	36
37	SPARE			20/1	*			20/1			SPARE	38
39	COFFEE MAKER	10	1.3	20/2		*		20/1			SPARE	40
41			1.3				*	20/1			SPARE	42

VOLTAGE: 208/120V 3Ø, 4W		PHASE A	10.20	LOCATION:	GROUND FLOOR
SIZE/TYPE BUS: 225A	A.I.C.:22,000	PHASE B	9.50	MOUNTING:	SURFACE
SIZE/TYPE MAINS: 225A-3P MCB		PHASE C	10.10	FED FROM:	DSBL
LUGS:		SUB TOTAL (kva)	29.80	REMARKS:	200% NEUTRAL

PANELBOARD '30-GLD'

POS NO	LOAD DESCRIPTION	WIRE SIZE	LOAD Kva	C/B SIZE	PHASE A	PHASE B	PHASE C	C/B SIZE	LOAD Kva	WIRE SIZE	LOAD DESCRIPTION	POS NO
1	RECEPTACLE - DISTRIBUTION MODULE	12	1.20	20/1	*			20/1	1.20	12	RECEPTACLE - DISTRIBUTION MODULE	2
3	RECEPTACLE - DISTRIBUTION MODULE	12	1.20	20/1		*		20/1	0.60	12	RECEPTACLE - DISTRIBUTION MODULE	4
5	RECEPTACLE - DISTRIBUTION MODULE	12	1.20	20/1			*	20/1	0.60	12	RECEPTACLE - DISTRIBUTION MODULE	6
7	RECEPTACLE - DISTRIBUTION MODULE	12	0.60	20/1	*			20/1		12	RECEP - DIST MODULE - SPARE	8
9	RECEP - DIST MODULE - SPARE	12		20/1		*		20/1		12	RECEP - DIST MODULE - SPARE	10
11	RECEPTACLE - EXAM	12	1.20	20/1			*	20/1	0.60	12	RECEPTACLE - PASSAGE	12
13	RECEPTACLE - EXAM	12	1.20	20/1	*			20/1	0.80	12	RECEPTACLE - PASSAGE	14
15	RECEPTACLE - EXAM	12	1.20	20/1		*		20/1	0.80	12	RECEPTACLE - BLOOD DRAW	16
17	RECEPTACLE - EXAM	12	1.20	20/1			*	20/1	0.60	12	RECEPTACLE - WAITING	18
19	SHADE MOTORS	12	1.2	20/1	*			20/1	0.60	12	RECEPTACLE - WAITING	20
21	SPARE			20/1		*		20/1	0.50	12	CIRC. PUMP RCP-1	22
23	SPARE			20/1			*	20/1			SPARE	24
25	SPARE			20/1	*			20/1			SPARE	26
27	SPARE			20/1		*		20/1			SPARE	28
29	SPARE			20/1			*	20/1			SPARE	30
31	SPARE			20/1	*			20/1			SPARE	32
33	SPARE			20/1		*		20/1			SPARE	34
35	SPARE			20/1			*	20/1			SPARE	36
37	SPARE			20/1	*			20/1			SPARE	38
39	SPARE			20/1		*		20/1			SPARE	40
41	SPARE			20/1			*	20/1			SPARE	42

VOLTAGE: 208/120V 3Ø, 4W		PHASE A	6.80	LOCATION:	GROUND FLOOR
SIZE/TYPE BUS: 225A	A.I.C.:22,000	PHASE B	4.30	MOUNTING:	SURFACE
SIZE/TYPE MAINS: 225A-3P MCB		PHASE C	5.40	FED FROM:	DSBL
LUGS:		SUB TOTAL (kva)	16.50	REMARKS:	200% NEUTRAL

FOR CONSTRUCTION
FULLY SPRINKLERED

Revisions:	Date

CONSULTANTS:

HDR Architecture, Inc.
1101 King Street | Suite 400 | Alexandria, Virginia 22314-2944 | 703.518.8500

ARCHITECT/ENGINEERS:

ARCHITECTURE ENGINEERING INTERIOR DESIGN DESIGN/BUILD
ASTORINO
227 Fort Pitt Boulevard Pittsburgh Pennsylvania 15222
TEL 412 765 1700 FAX 412 765 1711 www.astorino.com

Drawing Title: **Electrical Panelboard Schedules - Ground Floor**

Approved: Project Director

Project Title: **VA CARES CONSOLIDATION VAMC, PITTSBURGH, PA RESEARCH OFFICE BLDG.**

Location: **VAPHS UNIVERSITY DRIVE**

Date: **08-18-10** | Checked: **TMR** | Drawn: **LLG**

Project Number: **646CA2500R**

Building Number: **30**

Drawing Number: **EP6-211**

Dwg. -- of --

Office of Facilities Management

Department of Veterans Affairs

VA FORM 08-6231, OCT 1978

P:\Project\20054225.00\CAD\UNIVERSITY DRIVE\Research Office Building\Electrical\EP6-211.dwg LGARDNER 10/29/09 - 09:53:21

PANELBOARD '30-EQGLA'

POS NO	LOAD DESCRIPTION	WIRE SIZE	LOAD Kva	C/B SIZE	PHASE A	PHASE B	PHASE C	C/B SIZE	LOAD Kva	WIRE SIZE	LOAD DESCRIPTION	POS NO
1	RECEPTACLE - TELECOM ROOM	12	1.2	20/1	*						SPACE	2
3	RECEPTACLE - TELECOM ROOM	12	1.2	20/1		*					SPACE	4
5	RECEPTACLE - TELECOM ROOM	12	1.2	20/1			*				SPACE	6
7	RECEPTACLE - TELECOM ROOM	12	1.2	20/1	*						SPACE	8
9	SPARE			20/1		*					SPACE	10
11	SPARE			20/1			*				SPACE	12
13	SPACE				*						SPACE	14
15	SPACE					*					SPACE	16
17	SPACE						*				SPACE	18
19	SPARE			20/1	*			20/1			SPARE	20
21	SPARE			20/1		*		20/1			SPARE	22
23	SPARE			20/1			*	20/1			SPARE	24
25	SPARE			20/1	*			20/1			SPARE	26
27	SPARE			20/1		*		20/1			SPARE	28
29	SPARE			20/1			*	20/1			SPARE	30
31	SPARE			20/1	*			20/1			SPARE	32
33	SPARE			20/1		*		20/1			SPARE	34
35	SPARE			20/1			*	30/2	2.0	10	RECEPTACLE - TELECOM	36
37	SPARE			20/1	*				2.0			38
39	SPARE			20/1		*		30/2	2.0	10	RECEPTACLE - TELECOM	40
41	SPARE			20/1			*		2.0			42

VOLTAGE: 208/120V 3Ø, 4W	PHASE A 4.40	LOCATION:	GROUND FLOOR
SIZE/TYPE BUS: 400A	A.I.C.: 22,000	PHASE B 3.20	MOUNTING: SURFACE
SIZE/TYPE MAINS: MLO	PHASE C 5.20	FED FROM:	EQBLA
LUGS: FEED THRU	SUB TOTAL (kva) 12.80	REMARKS:	

PANELBOARD '30-EQGLB'

POS NO	LOAD DESCRIPTION	WIRE SIZE	LOAD Kva	C/B SIZE	PHASE A	PHASE B	PHASE C	C/B SIZE	LOAD Kva	WIRE SIZE	LOAD DESCRIPTION	POS NO
1	VAV BOXES	12	1.0	20/1	*			20/1	0.80	10	UNIT HEATERS	2
3	VAV BOXES	12	1.0	20/1		*		20/1	0.60	10	CABINET HEATERS	4
5	VAV BOXES	12	1.0	20/1			*	20/1	0.60	10	CABINET HEATERS	6
7	VAV BOXES	12	1.0	20/1	*			20/1	0.40	12	RECEPTACLES ELECTRIC CLOSET	8
9	SPACE					*		20/1	0.80	12	RECEPTACLES ELEVATOR LOBBY	10
11	SPACE						*				SPACE	12
13	SPACE				*						SPACE	14
15	SPACE					*					SPACE	16
17	SPACE						*				SPACE	18
19	SPARE			20/1	*			20/1			SPARE	20
21	SPARE			20/1		*		20/1			SPARE	22
23	SPARE			20/1			*	20/1			SPARE	24
25	SPARE			20/1	*			20/1			SPARE	26
27	SPARE			20/1		*		20/1			SPARE	28
29	SPARE			20/1			*	20/1			SPARE	30
31	SPARE			20/1	*			20/1			SPARE	32
33	SPARE			20/1		*		20/1			SPARE	34
35	SPARE			20/1			*	20/1			SPARE	36
37	SPARE			20/1	*			20/1			SPARE	38
39	EVAPORATOR	12	0.40	20/2		*		20/1			SPARE	40
41			0.40				*	20/1			SPARE	42

VOLTAGE: 208/120V 3Ø, 4W	PHASE A 3.20	LOCATION:	GROUND FLOOR
SIZE/TYPE BUS: 400A	A.I.C.: 22,000	PHASE B 2.80	MOUNTING: SURFACE
SIZE/TYPE MAINS: MLO	PHASE C 2.00	FED FROM:	EQBLB
LUGS:	SUB TOTAL (kva) 8.00	REMARKS:	

NOTE:

PROVIDE DOOR-IN-DOOR TYPE TRIMS FOR ALL PANELBOARDS

PANELBOARD '30-GHA'

POS NO	LOAD DESCRIPTION	WIRE SIZE	LOAD Kva	C/B SIZE	PHASE A	PHASE B	PHASE C	C/B SIZE	LOAD Kva	WIRE SIZE	LOAD DESCRIPTION	POS NO
1	LIGHTING - TOILET ROOM & LOBBY	12	2.07	20/1	*			20/1	3.208	12	LIGHTING - OPEN AREA AND WORK AREA	2
3	LIGHTING - EXAM ROOMS	12	1.515	20/1		*		20/1	1.824	12	LIGHTING - OPEN AREA	4
5	LIGHTING - CLINICAL TRIALS	12	2.022	20/1			*	20/1	2.265	12	LIGHTING - OFFICES	6
7	LIGHTING - CONFERENCE ROOM	12	1.895	20/1	*			20/1	2.320	12	LIGHTING - OPEN AREA	8
9	LIGHTING - AISLE COVE	12	1.922	20/1		*		20/1	.85	10	LIGHTING - EXTERIOR BUILDING WALL	10
11	LIGHTING - AISLE	12	1.499	20/1			*	20/1	.72	12	LIGHTING - CANOPY	12
13	SPACE				*						SPACE	14
15	SPACE					*					SPACE	16
17	SPACE						*				SPACE	18
19	SPARE			20/1	*			20/1			SPARE	20
21	SPARE			20/1		*		20/1			SPARE	22
23	SPARE			20/1			*	20/1			SPARE	24
25	SPARE			20/1	*			20/1			SPARE	26
27	SPARE			20/1		*		20/1			SPARE	28
29	SPARE			20/1			*	30/1	6	10	WATER HEATER EWH-2	30
31	SPARE			20/1	*			20/1			SPARE	32
33	SPARE			20/1		*		20/1			SPARE	34
35	SPARE			20/1			*	20/1			SPARE	36
37	SPARE			20/1	*				8			38
39	SPARE			20/1		*		40/3	8	8	WATER HEATER EWH-1	40
41	SPARE			20/1			*		8			42

VOLTAGE: 480/277V 3Ø, 4W	PHASE A 17.49	LOCATION:	GROUND FLOOR
SIZE/TYPE BUS: 225A	A.I.C.: 35,000	PHASE B 14.11	MOUNTING: SURFACE
SIZE/TYPE MAINS: 225A-3P MCB	PHASE C 20.51	FED FROM:	MPC
LUGS:	SUB TOTAL (kva) 52.11	REMARKS:	

PANELBOARD '30-LSGHA'

POS NO	LOAD DESCRIPTION	WIRE SIZE	LOAD Kva	C/B SIZE	PHASE A	PHASE B	PHASE C	C/B SIZE	LOAD Kva	WIRE SIZE	LOAD DESCRIPTION	POS NO
1	LIGHTING - OPEN AREA	12	.8	20/1	*						SPACE	2
3	LIGHTING - AISLE	12	.5	20/1		*					SPACE	4
5	LIGHTING - TOILET ROOMS & LOBBY	12	1.3	20/1			*				SPACE	6
7	SPACE				*						SPACE	8
9	SPACE					*					SPACE	10
11	SPACE						*				SPACE	12
13	SPACE				*						SPACE	14
15	SPACE					*					SPACE	16
17	SPACE						*				SPACE	18
19	SPARE			20/1	*			20/1			SPARE	20
21	SPARE			20/1		*		20/1			SPARE	22
23	SPARE			20/1			*	20/1			SPARE	24
25	SPARE			20/1	*			20/1			SPARE	26
27	SPARE			20/1		*		20/1			SPARE	28
29	SPARE			20/1			*	20/1			SPARE	30

VOLTAGE: 480/277V 3Ø, 4W	PHASE A 0.80	LOCATION:	GROUND FLOOR
SIZE/TYPE BUS: 100A	A.I.C.: 22,000	PHASE B 0.50	MOUNTING: SURFACE
SIZE/TYPE MAINS: MLO	PHASE C 1.30	FED FROM:	LSBHA
LUGS:	SUB TOTAL (kva) 2.60	REMARKS:	

FOR CONSTRUCTION
FULLY SPRINKLERED

Revisions: | **Date**

CONSULTANTS:

HDR Architecture, Inc.
1101 King Street | Suite 400 | Alexandria, Virginia 22314-2944 | 703.518.8500

ARCHITECT/ENGINEERS:

ARCHITECTURE ENGINEERING INTERIOR DESIGN DESIGN/BUILD
ASTORINO
227 Fort Pitt Boulevard Pittsburgh Pennsylvania 15222
TEL 412 765 1700 FAX 412 765 1711 www.astorino.com

Drawing Title: **Electrical Panelboard Schedules - Ground Floor**

Approved: Project Director

Project Title: **VA CARES CONSOLIDATION VAMC, PITTSBURGH, PA RESEARCH OFFICE BLDG.**

Location: **VAPHS UNIVERSITY DRIVE**

Date: **08-18-10** | Checked: **TMR** | Drawn: **LLG**

Project Number: **646CA2500R**

Building Number: **30**

Drawing Number: **EP6-212**

Dwg. -- of --

Office of Facilities Management

Department of Veterans Affairs

VA FORM 08-6231, OCT 1978

P:\Project\20054250.00\CAD\UNIVERSITY DRIVE\Research Office Building\Electrical\EP6-212.dwg SSTROBEL 11/17/09 - 06:37:29

PANELBOARD '30-1LA'

POS NO	LOAD DESCRIPTION	WIRE SIZE	LOAD Kva	C/B SIZE	PHASE A	PHASE B	PHASE C	C/B SIZE	LOAD Kva	WIRE SIZE	LOAD DESCRIPTION	POS NO
1	RECEPTACLE - DISTRIBUTION MODULE	12	1.20	20/1	*			20/1		12	RECEP - DIST MODULE - SPARE	2
3	RECEPTACLE - DISTRIBUTION MODULE	12	1.20	20/1		*		20/1		12	RECEP - DIST MODULE - SPARE	4
5	RECEPTACLE - DISTRIBUTION MODULE	12	1.20	20/1			*	20/1		12	RECEP - DIST MODULE - SPARE	6
7	RECEPTACLE - DISTRIBUTION MODULE	12	1.20	20/1	*			20/1		12	RECEP - DIST MODULE - SPARE	8
9	RECEPTACLE - DISTRIBUTION MODULE	12	1.20	20/1		*		20/1		12	RECEP - DIST MODULE - SPARE	10
11	RECEPTACLE - DISTRIBUTION MODULE	12	1.20	20/1			*	20/1		12	RECEP - DIST MODULE - SPARE	12
13	RECEPTACLE - DISTRIBUTION MODULE	12	1.20	20/1	*			20/1		12	RECEP - DIST MODULE - SPARE	14
15	RECEPTACLE - DISTRIBUTION MODULE	12	1.20	20/1		*		20/1		12	RECEP - DIST MODULE - SPARE	16
17	RECEPTACLE - DISTRIBUTION MODULE	12	1.20	20/1			*	20/1		12	RECEP - DIST MODULE - SPARE	18
19	RECEPTACLE - DISTRIBUTION MODULE	12	1.20	20/1	*			20/1		12	RECEP - DIST MODULE - SPARE	20
21	RECEPTACLE - DISTRIBUTION MODULE	12	1.20	20/1		*		20/1		12	RECEP - DIST MODULE - SPARE	22
23	RECEP - DIST MODULE - SPARE	12		20/1			*	20/1		12	RECEP - DIST MODULE - SPARE	24
25	RECEP - DIST MODULE - SPARE	12		20/1	*			20/1		12	RECEP - DIST MODULE - SPARE	26
27	RECEP - DIST MODULE - SPARE	12		20/1		*		20/1		12	RECEP - DIST MODULE - SPARE	28
29	RECEP - DIST MODULE - SPARE	12		20/1			*	20/1		12	RECEP - DIST MODULE - SPARE	30
31	RECEPTACLE - TELECOM	12	1.0	20/1	*			20/1	0.60	12	RECEPTACLE - OPEN AREA	32
33	RECEPTACLE - TELECOM	12	1.0	20/1		*		20/1	0.80	12	RECEPTACLE - OPEN AREA	34
35	SPARE			20/1			*	20/1			SPARE	36
37	SPARE			20/1	*			20/1			SPARE	38
39	SPARE			20/1		*		30/2	2.0	10	RECEPTACLE - TELECOM	40
41	SPARE			20/1			*		2.0			42

VOLTAGE: 208/120V 3Ø, 4W		PHASE A	6.40	LOCATION:	FIRST FLOOR
SIZE/TYPE BUS: 225A-3P	A.I.C.: 22,000	PHASE B	8.60	MOUNTING:	SURFACE
SIZE/TYPE MAINS: 225A-3P MCB		PHASE C	5.60	FED FROM:	DSBL
LUGS:		SUB TOTAL (kva)	20.60	REMARKS:	200% NEUTRAL

PANELBOARD '30-1LB'

POS NO	LOAD DESCRIPTION	WIRE SIZE	LOAD Kva	C/B SIZE	PHASE A	PHASE B	PHASE C	C/B SIZE	LOAD Kva	WIRE SIZE	LOAD DESCRIPTION	POS NO
1	RECEPTACLE - DISTRIBUTION MODULE	12	1.20	20/1	*			20/1	0.60	12	RECEPTACLE - DISTRIBUTION MODULE	2
3	RECEPTACLE - DISTRIBUTION MODULE	12	1.20	20/1		*		20/1	0.60	12	RECEPTACLE - DISTRIBUTION MODULE	4
5	RECEPTACLE - DISTRIBUTION MODULE	12	1.20	20/1			*	20/1		12	RECEPTACLE - DISTRIBUTION MODULE	6
7	RECEPTACLE - DISTRIBUTION MODULE	12	1.20	20/1	*			20/1		12	RECEPTACLE - DISTRIBUTION MODULE	8
9	RECEPTACLE - DISTRIBUTION MODULE	12	1.20	20/1		*		20/1		12	RECEPTACLE - DISTRIBUTION MODULE	10
11	RECEPTACLE - DISTRIBUTION MODULE	12	1.20	20/1			*	20/1		12	RECEPTACLE - DISTRIBUTION MODULE	12
13	RECEPTACLE - DISTRIBUTION MODULE	12	1.20	20/1	*			20/1		12	RECEPTACLE - DISTRIBUTION MODULE	14
15	RECEPTACLE - DISTRIBUTION MODULE	12	1.20	20/1		*					RECEP - DIST MODULE - SPARE	16
17	RECEP - DIST MODULE - SPARE	12		20/1			*				RECEP - DIST MODULE - SPARE	18
19	RECEP - DIST MODULE - SPARE	12		20/1	*						RECEP - DIST MODULE - SPARE	20
21	RECEP - DIST MODULE - SPARE	12		20/1		*					RECEP - DIST MODULE - SPARE	22
23	RECEP - DIST MODULE - SPARE	12		20/1			*				RECEP - DIST MODULE - SPARE	24
25	RECEP - DIST MODULE - SPARE	12		20/1	*						RECEP - DIST MODULE - SPARE	26
27	RECEP - DIST MODULE - SPARE	12		20/1		*					RECEP - DIST MODULE - SPARE	28
29	RECEP - DIST MODULE - SPARE	12		20/1			*				RECEP - DIST MODULE - SPARE	30
31	SPARE			20/1	*			20/1	1.20	12	RECEPTACLE - EWC	32
33	SPARE			20/1		*		20/1	0.80	12	RECEPTACLE - TOILET ROOM	34
35	SPARE			20/1			*	20/1	0.60	12	RECEPTACLE - OPEN AREA	36
37	SPARE			20/1	*			20/1	0.60	12	RECEPTACLE - OPEN AREA	38
39	SPARE			20/1		*		20/1	0.60	12	UNIT HEATER	40
41	SPARE			20/1			*	20/1			SPARE	42

VOLTAGE: 208/120V 3Ø, 4W		PHASE A	6.00	LOCATION:	FIRST FLOOR
SIZE/TYPE BUS: 225A-3P	A.I.C.: 22,000	PHASE B	5.60	MOUNTING:	SURFACE
SIZE/TYPE MAINS: 225A-3P MCB		PHASE C	3.00	FED FROM:	DSBL
LUGS:		SUB TOTAL (kva)	14.60	REMARKS:	200% NEUTRAL

NOTE:

PROVIDE DOOR-IN-DOOR TYPE TRIMS FOR ALL PANELBOARDS

PANELBOARD '30-1LC'

POS NO	LOAD DESCRIPTION	WIRE SIZE	LOAD Kva	C/B SIZE	PHASE A	PHASE B	PHASE C	C/B SIZE	LOAD Kva	WIRE SIZE	LOAD DESCRIPTION	POS NO
1	COPIER - DISTRIBUTION MODULE	12	1.20	20/1	*			20/1	1.20	12	RECEPTACLE - DISTRIBUTION MODULE	2
3	RECEPTACLE - DISTRIBUTION MODULE	12	0.80	20/1		*		20/1	1.20	12	RECEPTACLE - DISTRIBUTION MODULE	4
5	MICROWAVE - DISTRIBUTION MODULE	12	1.20	20/1			*	20/1	1.20	12	RECEPTACLE - DISTRIBUTION MODULE	6
7	COFFEE - DISTRIBUTION MODULE	12	1.20	20/1	*			20/1	1.20	12	RECEPTACLE - DISTRIBUTION MODULE	8
9	RECEPTACLE - DISTRIBUTION MODULE	12	1.20	20/1		*		20/1	1.20	12	RECEPTACLE - DISTRIBUTION MODULE	10
11	REFRIGERATOR - DISTRIBUTION MODULE	12	1.20	20/1			*	20/1	1.20	12	RECEPTACLE - DISTRIBUTION MODULE	12
13	RECEPTACLE - DISTRIBUTION MODULE	12	1.20	20/1	*			20/1	1.20	12	MICROWAVE - DISTRIBUTION MODULE	14
15	RECEPTACLE - DISTRIBUTION MODULE	12	1.20	20/1		*		20/1	1.20	12	COFFEE - DISTRIBUTION MODULE	16
17	RECEPTACLE - DISTRIBUTION MODULE	12	1.20	20/1			*	20/1	1.20	12	RECEPTACLE - DISTRIBUTION MODULE	18
19	RECEPTACLE - DISTRIBUTION MODULE	12	1.20	20/1	*			20/1	1.20	12	REFRIGERATOR - DISTRIBUTION MODULE	20
21	RECEPTACLE - DISTRIBUTION MODULE	12	1.20	20/1		*		20/1	1.20	12	RECEPTACLE - DISTRIBUTION MODULE	22
23	RECEPTACLE - DISTRIBUTION MODULE	12	1.20	20/1			*	20/1	1.20	12	RECEPTACLE - DISTRIBUTION MODULE	24
25	RECEPTACLE - DISTRIBUTION MODULE	12	1.20	20/1	*			20/1		12	RECEP - DIST MODULE - SPARE	26
27	RECEPTACLE - DISTRIBUTION MODULE	12	1.20	20/1		*		20/1		12	RECEP - DIST MODULE - SPARE	28
29	RECEPTACLE - DISTRIBUTION MODULE	12	1.20	20/1			*	20/1		12	RECEP - DIST MODULE - SPARE	30
31	SHADE MOTORS	12	1.0	20/1	*			20/1			SPARE	32
33	SHADE BUS/SUPPLY/REPEATER	12	.4	20/1		*		20/1			SPARE	34
35	SPARE			20/1			*	20/1			SPARE	36
37	SPARE			20/1	*			20/1			SPARE	38
39	COFFEE MAKER	10	1.3	20/2		*		20/1			SPARE	40
41			1.3				*	20/1			SPARE	42

VOLTAGE: 208/120V 3Ø, 4W		PHASE A	11.80	LOCATION:	FIRST FLOOR
SIZE/TYPE BUS: 225A-3P	A.I.C.: 22,000	PHASE B	12.10	MOUNTING:	SURFACE
SIZE/TYPE MAINS: 225A-3P MCB		PHASE C	12.10	FED FROM:	DSBL
LUGS:		SUB TOTAL (kva)	36.00	REMARKS:	200% NEUTRAL

PANELBOARD '30-1LD'

POS NO	LOAD DESCRIPTION	WIRE SIZE	LOAD Kva	C/B SIZE	PHASE A	PHASE B	PHASE C	C/B SIZE	LOAD Kva	WIRE SIZE	LOAD DESCRIPTION	POS NO
1	RECEPTACLE - DISTRIBUTION MODULE	12	1.20	20/1	*			20/1	0.80	12	RECEPTACLE - DISTRIBUTION MODULE	2
3	RECEPTACLE - DISTRIBUTION MODULE	12	1.20	20/1		*		20/1	0.80	12	RECEPTACLE - DISTRIBUTION MODULE	4
5	RECEPTACLE - DISTRIBUTION MODULE	12	1.20	20/1			*	20/1	1.20	12	RECEPTACLE - DISTRIBUTION MODULE	6
7	RECEPTACLE - DISTRIBUTION MODULE	12	1.20	20/1	*			20/1		12	RECEP - DIST MODULE - SPARE	8
9	RECEPTACLE - DISTRIBUTION MODULE	12	1.20	20/1		*		20/1		12	RECEP - DIST MODULE - SPARE	10
11	RECEPTACLE - DISTRIBUTION MODULE	12	1.20	20/1			*	20/1		12	RECEP - DIST MODULE - SPARE	12
13	RECEPTACLE - DISTRIBUTION MODULE	12	1.20	20/1	*			20/1		12	RECEP - DIST MODULE - SPARE	14
15	RECEPTACLE - DISTRIBUTION MODULE	12	1.20	20/1		*		20/1		12	RECEP - DIST MODULE - SPARE	16
17	RECEPTACLE - DISTRIBUTION MODULE	12	1.20	20/1			*	20/1		12	RECEP - DIST MODULE - SPARE	18
19	RECEPTACLE - DISTRIBUTION MODULE	12	1.20	20/1	*			20/1		12	RECEP - DIST MODULE - SPARE	20
21	RECEPTACLE - DISTRIBUTION MODULE	12	1.20	20/1		*		20/1		12	RECEP - DIST MODULE - SPARE	22
23	RECEPTACLE - DISTRIBUTION MODULE	12	0.60	20/1			*	20/1		12	RECEP - DIST MODULE - SPARE	24
25	RECEP - DIST MODULE - SPARE	12		20/1	*			20/1		12	RECEP - DIST MODULE - SPARE	26
27	RECEP - DIST MODULE - SPARE	12		20/1		*		20/1		12	RECEP - DIST MODULE - SPARE	28
29	RECEP - DIST MODULE - SPARE	12		20/1			*	20/1		12	RECEP - DIST MODULE - SPARE	30
31	SHADE MOTOR	12	1.0	20/1	*			20/1			SPARE	32
33	SPARE			20/1		*		20/1			SPARE	34
35	SPARE			20/1			*	20/1			SPARE	36
37	SPARE			20/1	*			20/1			SPARE	38
39	SPARE			20/1		*		20/1			SPARE	40
41	SPARE			20/1			*	20/1			SPARE	42

VOLTAGE: 208/120V 3Ø, 4W		PHASE A	6.60	LOCATION:	FIRST FLOOR
SIZE/TYPE BUS: 225A-3P	A.I.C.: 22,000	PHASE B	5.60	MOUNTING:	SURFACE
SIZE/TYPE MAINS: 225A-3P MCB		PHASE C	5.40	FED FROM:	DSBL
LUGS:		SUB TOTAL (kva)	17.60	REMARKS:	200% NEUTRAL

FOR CONSTRUCTION
FULLY SPRINKLERED

Revisions:	Date

CONSULTANTS:

HDR

HDR Architecture, Inc.

1101 King Street | Suite 400 | Alexandria, Virginia 22314-2944 | 703.518.8500

ARCHITECT/ENGINEERS:

ARCHITECTURE ENGINEERING INTERIOR DESIGN DESIGN/BUILD ASTORINO

227 Fort Pitt Boulevard Pittsburgh Pennsylvania 15222
TEL 412 765 1700 FAX 412 765 1711 www.astorino.com

Drawing Title: **Electrical Panelboard Schedules - 1st Floor**

Approved: Project Director

Project Title: **VA CARES CONSOLIDATION VAMC, PITTSBURGH, PA RESEARCH OFFICE BLDG.**

Location: **VAPHS UNIVERSITY DRIVE**

Date: **08-18-10** | Checked: **TMR** | Drawn: **LLG**

Project Number: **646CA2500R**

Building Number: **30**

Drawing Number: **EP6-221**

Dwg. -- of --

Office of Facilities Management

Department of Veterans Affairs

VA FORM 08-6231, OCT 1978

P:\Project\2005425.00\CAD\UNIVERSITY DRIVE\Research Office Building\Electrical\EP6-221.dwg LGARDNER 09/22/09 ; 08:35:27

PANELBOARD '30-EQ1LA'

POS NO	LOAD DESCRIPTION	WIRE SIZE	LOAD Kva	C/B SIZE	PHASE A	PHASE B	PHASE C	C/B SIZE	LOAD Kva	WIRE SIZE	LOAD DESCRIPTION	POS NO
1	RECEPTACLE - TELECOM ROOM	12	1.20	20/1	*						SPACE	2
3	RECEPTACLE - TELECOM ROOM	12	1.20	20/1		*					SPACE	4
5	RECEPTACLE - TELECOM ROOM	12	1.20	20/1			*				SPACE	6
7	RECEPTACLE - TELECOM ROOM	12	1.20	20/1	*						SPACE	8
9	SPARE			20/1		*					SPACE	10
11	SPARE			20/1			*				SPACE	12
13	SPACE				*						SPACE	14
15	SPACE					*					SPACE	16
17	SPACE						*				SPACE	18
19	SPARE			20/1	*			20/1			SPARE	20
21	SPARE			20/1		*		20/1			SPARE	22
23	SPARE			20/1			*	20/1			SPARE	24
25	SPARE			20/1	*			20/1			SPARE	26
27	SPARE			20/1		*		20/1			SPARE	28
29	SPARE			20/1			*	20/1			SPARE	30
31	SPARE			20/1	*			20/1			SPARE	32
33	SPARE			20/1		*		20/1			SPARE	34
35	SPARE			20/1			*	30/2	2.0	10	RECEPTACLE - TELECOM	36
37	SPARE			20/1	*				2.0			38
39	SPARE			20/1		*		30/2	2.0	10	RECEPTACLE - TELECOM	40
41	SPARE			20/1			*		2.0			42

VOLTAGE: 208/120V 3Ø, 4W	PHASE A 4.40	LOCATION:	FIRST FLOOR
SIZE/TYPE BUS: 400A	A.I.C.: 22,000	PHASE B 3.20	MOUNTING: SURFACE
SIZE/TYPE MAINS: MLO	PHASE C 5.20	FED FROM:	EQGLA
LUGS: FEED THRU	SUB TOTAL (kva) 12.80	REMARKS:	

PANELBOARD '30-EQ1LB'

POS NO	LOAD DESCRIPTION	WIRE SIZE	LOAD Kva	C/B SIZE	PHASE A	PHASE B	PHASE C	C/B SIZE	LOAD Kva	WIRE SIZE	LOAD DESCRIPTION	POS NO
1	VAV BOXES	12	1.0	20/1	*			20/1	0.40	12	RECEPTACLE - ELECTRIC CLOSET	2
3	VAV BOXES	12	1.0	20/1		*					SPACE	4
5	VAV BOXES	12	1.0	20/1			*				SPACE	6
7	VAV BOXES	12	1.0	20/1	*						SPACE	8
9	SPACE					*					SPACE	10
11	SPACE						*				SPACE	12
13	SPACE				*						SPACE	14
15	SPACE					*					SPACE	16
17	SPACE						*				SPACE	18
19	SPARE			20/1	*			20/1			SPARE	20
21	SPARE			20/1		*		20/1			SPARE	22
23	SPARE			20/1			*	20/1			SPARE	24
25	SPARE			20/1	*			20/1			SPARE	26
27	SPARE			20/1		*		20/1			SPARE	28
29	SPARE			20/1			*	20/1			SPARE	30
31	SPARE			20/1	*			20/1			SPARE	32
33	SPARE			20/1		*		20/1			SPARE	34
35	SPARE			20/1			*	20/1			SPARE	36
37	SPARE			20/1	*			20/1			SPARE	38
39	EVAPORATORS	12	0.40	20/2		*		20/2	1.0	12	REFRIGERANT BRANCH CONTROLLER #1	40
41			0.40				*		1.0			42

VOLTAGE: 208/120V 3Ø, 4W	PHASE A 2.40	LOCATION:	FIRST FLOOR
SIZE/TYPE BUS: 400A	A.I.C.: 22,000	PHASE B 2.40	MOUNTING: SURFACE
SIZE/TYPE MAINS: MLO	PHASE C 2.40	FED FROM:	EQGLB
LUGS: FEED THRU	SUB TOTAL (kva) 7.20	REMARKS:	

NOTE:

PROVIDE DOOR-IN-DOOR TYPE TRIMS FOR ALL PANELBOARDS

PANELBOARD '30-1HA'

POS NO	LOAD DESCRIPTION	WIRE SIZE	LOAD Kva	C/B SIZE	PHASE A	PHASE B	PHASE C	C/B SIZE	LOAD Kva	WIRE SIZE	LOAD DESCRIPTION	POS NO
1	LIGHTING - TOILET ROOMS & OPEN OFFICE	12	3.02	20/1	*			20/1	1.972	12	LIGHTING-PENTHOUSE	2
3	LIGHTING - OFFICE'S	12	3.179	20/1		*		20/1	.252	12	LIGHTING-ELEVATOR LOBBY	4
5	LIGHTING - AISLE WAY	12	3.09	20/1			*				SPACE	6
7	LIGHTING - AISLE WAY COVE	12	2.294	20/1	*						SPACE	8
9	LIGHTING - OFFICE'S	12	3.584	20/1		*					SPACE	10
11	LIGHTING - OFFICE'S	12	2.921	20/1			*				SPACE	12
13	SPACE				*						SPACE	14
15	SPACE					*					SPACE	16
17	SPACE						*				SPACE	18
19	SPARE			20/1	*			20/1				20
21	SPARE			20/1		*		20/1				22
23	SPARE			20/1			*	20/1				24
25	SPARE			20/1	*			20/1				26
27	SPARE			20/1		*		30/1	6	10	WATER HEATER EWH-2	28
29	SPARE			20/1			*	30/1	6	10	WATER HEATER EWH-2	30
31	SPARE			20/1	*			30/1			SPARE	32
33	SPARE			20/1		*		30/1			SPARE	34
35	SPARE			20/1			*	30/1			SPARE	36
37	SPARE			20/1	*				8			38
39	SPARE			20/1		*		40/3	8	8	WATER HEATER EWH-1	40
41	SPARE			20/1			*		8			42

VOLTAGE: 480/277V 3Ø, 4W	PHASE A 15.29	LOCATION:	FIRST FLOOR
SIZE/TYPE BUS: 225A	A.I.C.: 35,000	PHASE B 21.02	MOUNTING: SURFACE
SIZE/TYPE MAINS: 225A-3P MCB	PHASE C 20.01	FED FROM:	MPC
LUGS:	SUB TOTAL (kva) 56.31	REMARKS:	

PANELBOARD '30-LS1HA'

POS NO	LOAD DESCRIPTION	WIRE SIZE	LOAD Kva	C/B SIZE	PHASE A	PHASE B	PHASE C	C/B SIZE	LOAD Kva	WIRE SIZE	LOAD DESCRIPTION	POS NO
1	LIGHTING	12	.8	20/1	*						SPACE	2
3	LIGHTING	12	1.0	20/1		*					SPACE	4
5	LIGHTING	12	.65	20/1			*				SPACE	6
7	LIGHTING	12	.4	20/1	*						SPACE	8
9	SPACE					*					SPACE	10
11	SPACE						*				SPACE	12
13	SPACE				*						SPACE	14
15	SPACE					*					SPACE	16
17	SPACE						*				SPACE	18
19	SPARE			20/1	*			20/1			SPARE	20
21	SPARE			20/1		*		20/1			SPARE	22
23	SPARE			20/1			*	20/1			SPARE	24
25	SPARE			20/1	*			20/1			SPARE	26
27	SPARE			20/1		*		20/1			SPARE	28
29	SPARE			20/1			*	20/1			SPARE	30

VOLTAGE: 480/277V 3Ø, 4W	PHASE A 1.20	LOCATION:	FIRST FLOOR
SIZE/TYPE BUS: 100A	A.I.C.: 22,000	PHASE B 1.00	MOUNTING: SURFACE
SIZE/TYPE MAINS: MLO	PHASE C 0.65	FED FROM:	LSBHA
LUGS:	SUB TOTAL (kva) 2.85	REMARKS:	

FOR CONSTRUCTION
FULLY SPRINKLERED

Revisions:	Date

CONSULTANTS:

HDR

HDR Architecture, Inc.

1101 King Street | Suite 400 | Alexandria, Virginia 22314-2944 | 703.518.8500

ARCHITECT/ENGINEERS:

ARCHITECTURE ENGINEERING INTERIOR DESIGN DESIGN/BUILD ASTORINO

227 Fort Pitt Boulevard Pittsburgh Pennsylvania 15222
TEL 412 765 1700 FAX 412 765 1711 www.astorino.com

Drawing Title: **Electrical Panelboard Schedules - 1st Floor**

Approved: Project Director

Project Title: **VA CARES CONSOLIDATION VAMC, PITTSBURGH, PA RESEARCH OFFICE BLDG.**

Location: **VAPHS UNIVERSITY DRIVE**

Date: **08-18-10** | Checked: **TMR** | Drawn: **LLG**

Project Number: **646CA2500R**

Building Number: **30**

Drawing Number: **EP6-222**

Dwg. -- of --

Office of Facilities Management

Department of Veterans Affairs

VA FORM 08-6231, OCT 1978

P:\Project\20054250.00\CAD\UNIVERSITY DRIVE\Research Office Building\Electrical\EP6-222.dwg LGARDNER 11/23/09 - 10:25:17

PANELBOARD '30-2LA'

POS NO	LOAD DESCRIPTION	WIRE SIZE	LOAD Kva	C/B SIZE	PHASE A	PHASE B	PHASE C	C/B SIZE	LOAD Kva	WIRE SIZE	LOAD DESCRIPTION	POS NO
1	RECEPTACLE - DISTRIBUTION MODULE	12	1.20	20/1	*			20/1		12	RECEP - DIST MODULE - SPARE	2
3	RECEPTACLE - DISTRIBUTION MODULE	12	1.20	20/1		*		20/1		12	RECEP - DIST MODULE - SPARE	4
5	RECEPTACLE - DISTRIBUTION MODULE	12	1.20	20/1			*	20/1		12	RECEP - DIST MODULE - SPARE	6
7	RECEPTACLE - DISTRIBUTION MODULE	12	1.20	20/1	*			20/1		12	RECEP - DIST MODULE - SPARE	8
9	RECEPTACLE - DISTRIBUTION MODULE	12	1.20	20/1		*		20/1		12	RECEP - DIST MODULE - SPARE	10
11	RECEPTACLE - DISTRIBUTION MODULE	12	1.20	20/1			*	20/1		12	RECEP - DIST MODULE - SPARE	12
13	RECEPTACLE - DISTRIBUTION MODULE	12	1.20	20/1	*			20/1		12	RECEP - DIST MODULE - SPARE	14
15	RECEPTACLE - DISTRIBUTION MODULE	12	1.20	20/1		*		20/1		12	RECEP - DIST MODULE - SPARE	16
17	RECEPTACLE - DISTRIBUTION MODULE	12	1.20	20/1			*	20/1		12	RECEP - DIST MODULE - SPARE	18
19	RECEPTACLE - DISTRIBUTION MODULE	12	1.20	20/1	*			20/1		12	RECEP - DIST MODULE - SPARE	20
21	RECEPTACLE - DISTRIBUTION MODULE	12	1.20	20/1		*		20/1		12	RECEP - DIST MODULE - SPARE	22
23	RECEPTACLE - DISTRIBUTION MODULE	12	1.20	20/1			*	20/1		12	RECEP - DIST MODULE - SPARE	24
25	RECEP - DIST MODULE - SPARE	12		20/1	*			20/1		12	RECEP - DIST MODULE - SPARE	26
27	RECEP - DIST MODULE - SPARE	12		20/1		*		20/1		12	RECEP - DIST MODULE - SPARE	28
29	RECEP - DIST MODULE - SPARE	12		20/1			*	20/1		12	RECEP - DIST MODULE - SPARE	30
31	RECEPTACLE - BRIDGE	12	1.0	20/1	*			20/1	0.60	12	RECEPTACLE - OPEN AREA	32
33	RECEPTACLE - TELECOM	12	1.0	20/1		*		20/1	0.80	12	RECEPTACLE - OPEN AREA	34
35	RECEPTACLE - TELECOM	12	1.0	20/1			*	20/1	1.00	10	RECEPTACLE - ELEV. MACHINE ROOM	36
37	SPARE			20/1	*			20/1	0.60	12	RECEPTACLE - LOBBY ROOF	38
39	SPARE			20/1		*		30/2	2.0	10	RECEPTACLE - TELECOM	40
41	SPARE			20/1			*		2.0			42

VOLTAGE: 208/120V 3Ø, 4W		PHASE A 7.00	LOCATION: SECOND FLOOR
SIZE/TYPE BUS: 225A	A.I.C.: 22,000	PHASE B 8.60	MOUNTING: SURFACE
SIZE/TYPE MAINS: 225A-3P MCB		PHASE C 8.80	FED FROM: DSBL
LUGS:		SUB TOTAL (kva) 24.40	REMARKS: 200% NEUTRAL

PANELBOARD '30-2LB'

POS NO	LOAD DESCRIPTION	WIRE SIZE	LOAD Kva	C/B SIZE	PHASE A	PHASE B	PHASE C	C/B SIZE	LOAD Kva	WIRE SIZE	LOAD DESCRIPTION	POS NO
1	RECEPTACLE - DISTRIBUTION MODULE	12	1.20	20/1	*			20/1	0.60	12	RECEPTACLE - DISTRIBUTION MODULE	2
3	RECEPTACLE - DISTRIBUTION MODULE	12	1.20	20/1		*		20/1	0.60	12	RECEPTACLE - DISTRIBUTION MODULE	4
5	RECEPTACLE - DISTRIBUTION MODULE	12	1.20	20/1			*	20/1		12	RECEPTACLE - DISTRIBUTION MODULE	6
7	RECEPTACLE - DISTRIBUTION MODULE	12	1.20	20/1	*			20/1		12	RECEPTACLE - DISTRIBUTION MODULE	8
9	RECEPTACLE - DISTRIBUTION MODULE	12	1.20	20/1		*		20/1		12	RECEPTACLE - DISTRIBUTION MODULE	10
11	RECEPTACLE - DISTRIBUTION MODULE	12	1.20	20/1			*	20/1		12	RECEPTACLE - DISTRIBUTION MODULE	12
13	RECEPTACLE - DISTRIBUTION MODULE	12	1.20	20/1	*			20/1		12	RECEPTACLE - DISTRIBUTION MODULE	14
15	RECEPTACLE - DISTRIBUTION MODULE	12	1.20	20/1		*					RECEP - DIST MODULE - SPARE	16
17	RECEP - DIST MODULE - SPARE	12		20/1			*				RECEP - DIST MODULE - SPARE	18
19	RECEP - DIST MODULE - SPARE	12		20/1	*						RECEP - DIST MODULE - SPARE	20
21	RECEP - DIST MODULE - SPARE	12		20/1		*					RECEP - DIST MODULE - SPARE	22
23	RECEP - DIST MODULE - SPARE	12		20/1			*				RECEP - DIST MODULE - SPARE	24
25	RECEP - DIST MODULE - SPARE	12		20/1	*						RECEP - DIST MODULE - SPARE	26
27	RECEP - DIST MODULE - SPARE	12		20/1		*					RECEP - DIST MODULE - SPARE	28
29	RECEP - DIST MODULE - SPARE	12		20/1			*				RECEP - DIST MODULE - SPARE	30
31	SPARE			20/1	*			20/1	1.20	12	RECEPTACLE - EWC	32
33	SPARE			20/1		*		20/1	0.80	12	RECEPTACLE - TOILET ROOM	34
35	SPARE			20/1			*	20/1	0.60	12	RECEPTACLE - PENTHOUSE	36
37	SPARE			20/1	*			20/1	0.60	12	RECEPTACLE - PENTHOUSE	38
39	SPARE			20/1		*		20/1	0.60	12	RECEPTACLE - PENTHOUSE	40
41	SPARE			20/1			*	20/1	0.60	12	UNIT HEATER	42

VOLTAGE: 208/120V 3Ø, 4W		PHASE A 6.00	LOCATION: SECOND FLOOR
SIZE/TYPE BUS: 225A	A.I.C.: 22,000	PHASE B 5.60	MOUNTING: SURFACE
SIZE/TYPE MAINS: 225A-3P MCB		PHASE C 3.60	FED FROM: DSBL
LUGS:		SUB TOTAL (kva) 15.20	REMARKS: 200% NEUTRAL

NOTE:

PROVIDE DOOR-IN-DOOR TYPE TRIMS FOR ALL PANELBOARDS

PANELBOARD '30-2LC'

POS NO	LOAD DESCRIPTION	WIRE SIZE	LOAD Kva	C/B SIZE	PHASE A	PHASE B	PHASE C	C/B SIZE	LOAD Kva	WIRE SIZE	LOAD DESCRIPTION	POS NO
1	COPIER - DISTRIBUTION MODULE	12	1.20	20/1	*			20/1	1.20	12	RECEPTACLE - DISTRIBUTION MODULE	2
3	RECEPTACLE - DISTRIBUTION MODULE	12	0.80	20/1		*		20/1	1.20	12	RECEPTACLE - DISTRIBUTION MODULE	4
5	MICROWAVE - DISTRIBUTION MODULE	12	1.20	20/1			*	20/1	1.20	12	RECEPTACLE - DISTRIBUTION MODULE	6
7	COFFEE - DISTRIBUTION MODULE	12	1.20	20/1	*			20/1	1.20	12	RECEPTACLE - DISTRIBUTION MODULE	8
9	RECEPTACLE - DISTRIBUTION MODULE	12	1.20	20/1		*		20/1	1.20	12	RECEPTACLE - DISTRIBUTION MODULE	10
11	REFRIGERATOR - DISTRIBUTION MODULE	12	1.20	20/1			*	20/1	1.20	12	RECEPTACLE - DISTRIBUTION MODULE	12
13	RECEPTACLE - DISTRIBUTION MODULE	12	1.20	20/1	*			20/1	1.20	12	MICROWAVE - DISTRIBUTION MODULE	14
15	RECEPTACLE - DISTRIBUTION MODULE	12	1.20	20/1		*		20/1	1.20	12	COFFEE - DISTRIBUTION MODULE	16
17	RECEPTACLE - DISTRIBUTION MODULE	12	1.20	20/1			*	20/1	1.20	12	RECEPTACLE - DISTRIBUTION MODULE	18
19	RECEPTACLE - DISTRIBUTION MODULE	12	1.20	20/1	*			20/1	1.20	12	REFRIGERATOR - DISTRIBUTION MODULE	20
21	RECEPTACLE - DISTRIBUTION MODULE	12	1.20	20/1		*		20/1	1.20	12	RECEPTACLE - DISTRIBUTION MODULE	22
23	RECEPTACLE - DISTRIBUTION MODULE	12	1.20	20/1			*	20/1	1.20	12	RECEPTACLE - DISTRIBUTION MODULE	24
25	RECEPTACLE - DISTRIBUTION MODULE	12	1.20	20/1	*			20/1		12	RECEP - DIST MODULE - SPARE	26
27	RECEPTACLE - DISTRIBUTION MODULE	12	1.20	20/1		*		20/1		12	RECEP - DIST MODULE - SPARE	28
29	RECEPTACLE - DISTRIBUTION MODULE	12	1.20	20/1			*	20/1		12	RECEP - DIST MODULE - SPARE	30
31	SHADE MOTORS			20/1	*			20/1			SPARE	32
33	SHADE BUS/SUPPLY/REPEATER			20/1		*		20/1			SPARE	34
35	SPARE			20/1			*	20/1			SPARE	36
37	SPARE			20/1	*			20/1			SPARE	38
39	COFFEE MAKER	10	1.3	20/2		*		20/1			SPARE	40
41			1.3				*	20/1			SPARE	42

VOLTAGE: 208/120V 3Ø, 4W		PHASE A 10.80	LOCATION: SECOND FLOOR
SIZE/TYPE BUS: 225A	A.I.C.: 22,000	PHASE B 11.70	MOUNTING: SURFACE
SIZE/TYPE MAINS: 225A-3P MCB		PHASE C 12.10	FED FROM: DSBL
LUGS:		SUB TOTAL (kva) 34.60	REMARKS: 200% NEUTRAL

PANELBOARD '30-2LD'

POS NO	LOAD DESCRIPTION	WIRE SIZE	LOAD Kva	C/B SIZE	PHASE A	PHASE B	PHASE C	C/B SIZE	LOAD Kva	WIRE SIZE	LOAD DESCRIPTION	POS NO
1	RECEPTACLE - DISTRIBUTION MODULE	12	1.20	20/1	*			20/1	0.80	12	RECEPTACLE - DISTRIBUTION MODULE	2
3	RECEPTACLE - DISTRIBUTION MODULE	12	1.20	20/1		*		20/1	0.80	12	RECEPTACLE - DISTRIBUTION MODULE	4
5	RECEPTACLE - DISTRIBUTION MODULE	12	1.20	20/1			*	20/1	1.20	12	RECEPTACLE - DISTRIBUTION MODULE	6
7	RECEPTACLE - DISTRIBUTION MODULE	12	1.20	20/1	*			20/1		12	RECEP - DIST MODULE - SPARE	8
9	RECEPTACLE - DISTRIBUTION MODULE	12	1.20	20/1		*		20/1		12	RECEP - DIST MODULE - SPARE	10
11	RECEPTACLE - DISTRIBUTION MODULE	12	1.20	20/1			*	20/1		12	RECEP - DIST MODULE - SPARE	12
13	RECEPTACLE - DISTRIBUTION MODULE	12	1.20	20/1	*			20/1		12	RECEP - DIST MODULE - SPARE	14
15	RECEPTACLE - DISTRIBUTION MODULE	12	1.20	20/1		*		20/1		12	RECEP - DIST MODULE - SPARE	16
17	RECEPTACLE - DISTRIBUTION MODULE	12	1.20	20/1			*	20/1		12	RECEP - DIST MODULE - SPARE	18
19	RECEPTACLE - DISTRIBUTION MODULE	12	1.20	20/1	*			20/1		12	RECEP - DIST MODULE - SPARE	20
21	RECEPTACLE - DISTRIBUTION MODULE	12	1.20	20/1		*		20/1		12	RECEP - DIST MODULE - SPARE	22
23	RECEPTACLE - DISTRIBUTION MODULE	12	0.60	20/1			*	20/1		12	RECEP - DIST MODULE - SPARE	24
25	RECEP - DIST MODULE - SPARE	12		20/1	*			20/1		12	RECEP - DIST MODULE - SPARE	26
27	RECEP - DIST MODULE - SPARE	12		20/1		*		20/1		12	RECEP - DIST MODULE - SPARE	28
29	RECEP - DIST MODULE - SPARE	12		20/1			*	20/1		12	RECEP - DIST MODULE - SPARE	30
31	SHADE MOTOR	12	1.0	20/1	*			20/1	.4	12	RECEPTACLE - ROOF	32
33	SPARE			20/1		*		20/1			SPARE	34
35	SPARE			20/1			*	20/1			SPARE	36
37	SPARE			20/1	*			20/1			SPARE	38
39	SPARE			20/1		*		20/1			SPARE	40
41	SPARE			20/1			*	20/1			SPARE	42

VOLTAGE: 208/120V 3Ø, 4W		PHASE A 7.00	LOCATION: SECOND FLOOR
SIZE/TYPE BUS: 225A	A.I.C.: 22,000	PHASE B 5.60	MOUNTING: SURFACE
SIZE/TYPE MAINS: 225A-3P MCB		PHASE C 5.40	FED FROM: DSBL
LUGS:		SUB TOTAL (kva) 18.00	REMARKS: 200% NEUTRAL

FOR CONSTRUCTION
FULLY SPRINKLERED

Revisions:	Date

CONSULTANTS:

HDR

HDR Architecture, Inc.

1101 King Street | Suite 400 | Alexandria, Virginia 22314-2944 | 703.518.8500

ARCHITECT/ENGINEERS:

ARCHITECTURE ENGINEERING INTERIOR DESIGN DESIGN/BUILD

ASTORINO

227 Fort Pitt Boulevard Pittsburgh Pennsylvania 15222
TEL 412 765 1700 FAX 412 765 1711 www.astorino.com

Drawing Title: **Electrical Panelboard Schedules - 2nd Floor**

Approved: Project Director

Project Title: **VA CARES CONSOLIDATION VAMC, PITTSBURGH, PA RESEARCH OFFICE BLDG.**

Location: **VAPHS UNIVERSITY DRIVE**

Date: **08-18-10** | Checked: **TMR** | Drawn: **LLG**

Project Number: **646CA2500R**

Building Number: **30**

Drawing Number: **EP6-231**

Dwg. -- of --

Office of Facilities Management

Department of Veterans Affairs

VA FORM 08-6231, OCT 1978

P:\Project\2005425.00\CAD\UNIVERSITY DRIVE\Research Office Building\Electrical\EP6-231.dwg LGARDNER 09/28/09 : 10:53:37

PANELBOARD '30-EQ2LA'

POS NO	LOAD DESCRIPTION	WIRE SIZE	LOAD Kva	C/B SIZE	PHASE A	PHASE B	PHASE C	C/B SIZE	LOAD Kva	WIRE SIZE	LOAD DESCRIPTION	POS NO
1	RECEPTACLE - TELECOM ROOM	12	1.2	20/1	*			20/1	1.2	10	SECURITY CAMERA	2
3	RECEPTACLE - TELECOM ROOM	12	1.2	20/1		*		20/1	1.2	10	SECURITY CAMERA	4
5	RECEPTACLE - TELECOM ROOM	12	1.2	20/1			*	20/1	1.2	10	SECURITY CAMERA	6
7	RECEPTACLE - TELECOM ROOM	12	1.2	20/1	*			20/1	1.2	10	SECURITY CAMERA	8
9	SPARE			20/1		*		20/1	1.2	10	SECURITY CAMERA	10
11	SPARE			20/1			*				SPACE	12
13	SPACE				*						SPACE	14
15	SPACE					*					SPACE	16
17	SPACE						*				SPACE	18
19	SPARE			20/1	*			20/1			SPARE	20
21	SPARE			20/1		*		20/1			SPARE	22
23	SPARE			20/1			*	20/1			SPARE	24
25	SPARE			20/1	*			20/1			SPARE	26
27	SPARE			20/1		*		20/1			SPARE	28
29	SPARE			20/1			*	20/1			SPARE	30
31	SPARE			20/1	*			20/1			SPARE	32
33	SPARE			20/1		*		20/1			SPARE	34
35	SPARE			20/1			*	30/2	2.0	10	RECEPTACLE - TELECOM	36
37	SPARE			20/1	*				2.0			38
39	SPARE			20/1		*		30/2	2.0	10	RECEPTACLE - TELECOM	40
41	SPARE			20/1			*		2.0			42

VOLTAGE: 208/120V 3Ø, 4W		PHASE A	6.80	LOCATION:	SECOND FLOOR
SIZE/TYPE BUS: 400A	A.I.C.: 22,000	PHASE B	5.60	MOUNTING:	SURFACE
SIZE/TYPE MAINS: MLO		PHASE C	6.40	FED FROM:	EQ1LA
LUGS:		SUB TOTAL (kva)	18.80	REMARKS:	

PANELBOARD '30-2HA'

POS NO	LOAD DESCRIPTION	WIRE SIZE	LOAD Kva	C/B SIZE	PHASE A	PHASE B	PHASE C	C/B SIZE	LOAD Kva	WIRE SIZE	LOAD DESCRIPTION	POS NO
1	LIGHTING - TOILET ROOMS & OPEN OFFICE	12	3.02	20/1	*			20/1	1.972	12	LIGHTING - PENTHOUSE	2
3	LIGHTING - OFFICE'S	12	3.179	20/1		*		20/1	.252	12	LIGHTING - ELEVATOR LOBBY	4
5	LIGHTING - AISLEWAY	12	3.09	20/1			*	20/1	.756	10	LIGHTING - BRIDGE & LOBBY	6
7	LIGHTING - AISLEWAY COVE	12	2.294	20/1	*			20/1	.80	10	LIGHTING - ELEV. LOBBY & MACHINE RM	8
9	LIGHTING - OFFICE'S	12	3.584	20/1		*					SPACE	10
11	LIGHTING - OFFICE'S	12	2.921	20/1			*				SPACE	12
13	SPACE				*						SPACE	14
15	SPACE					*					SPACE	16
17	SPACE						*				SPACE	18
19	SPARE			20/1	*			20/1				20
21	SPARE			20/1		*		20/1				22
23	SPARE			20/1			*	20/1				24
25	SPARE			20/1	*			20/1				26
27	SPARE			20/1		*		30/1	6	10	WATER HEATER EWH-2	28
29	SPARE			20/1			*	30/1	6	10	WATER HEATER EWH-2	30
31	SPARE			20/1	*			30/1			SPARE	32
33	SPARE			20/1		*		30/1			SPARE	34
35	SPARE			20/1			*	30/1			SPARE	36
37	SPARE			20/1	*			40/3	8	8	WATER HEATER EWH-1	38
39	SPARE			20/1		*			8			40
41	SPARE			20/1			*		8			42

VOLTAGE: 480/277V 3Ø, 4W		PHASE A	16.09	LOCATION:	SECOND FLOOR
SIZE/TYPE BUS: 225A	A.I.C.: 35,000	PHASE B	21.02	MOUNTING:	SURFACE
SIZE/TYPE MAINS: 225A-3P MCB		PHASE C	20.77	FED FROM:	MPC
LUGS:		SUB TOTAL (kva)	57.87	REMARKS:	

PANELBOARD '30-EQ2LB'

POS NO	LOAD DESCRIPTION	WIRE SIZE	LOAD Kva	C/B SIZE	PHASE A	PHASE B	PHASE C	C/B SIZE	LOAD Kva	WIRE SIZE	LOAD DESCRIPTION	POS NO
1	VAV BOXES - 2ND FLOOR	12	1.0	20/1	*			20/1	0.40	12	RECEPTACLE - ELECTRIC CLOSET	2
3	VAV BOXES - 2ND FLOOR	12	1.0	20/1		*					SPACE	4
5	VAV BOXES - 2ND FLOOR	12	1.0	20/1			*				SPACE	6
7	VAV BOXES - 2ND FLOOR	12	1.0	20/1	*						SPACE	8
9	VAV BOXES - ROOF	10	0.50	20/1		*					SPACE	10
11	SPACE						*				SPACE	12
13	SPACE				*						SPACE	14
15	SPACE					*					SPACE	16
17	SPACE						*				SPACE	18
19	SPARE			20/1	*			20/1			SPARE	20
21	SPARE			20/1		*		20/1			SPARE	22
23	SPARE			20/1			*	20/1			SPARE	24
25	SPARE			20/1	*			20/1			SPARE	26
27	SPARE			20/1		*		20/1			SPARE	28
29	SPARE			20/1			*	20/1			SPARE	30
31	SPARE			20/1	*			20/1			SPARE	32
33	SPARE			20/1		*		20/1			SPARE	34
35	SPARE			20/1			*	20/1			SPARE	36
37	SPARE			20/1	*			20/1			SPARE	38
39	EVAPORATORS	12	0.40	20/2		*		20/1			SPARE	40
41			0.40				*	20/1			SPARE	42

		PHASE A	2.40	LOCATION:	SECOND FLOOR
SIZE/TYPE BUS: 400A	A.I.C.: 22,000	PHASE B	1.90	MOUNTING:	SURFACE
SIZE/TYPE MAINS: MLO		PHASE C	1.40	FED FROM:	EQ1LB
LUGS:		SUB TOTAL (kva)	5.70	REMARKS:	

NOTE:

PROVIDE DOOR-IN-DOOR TYPE TRIMS FOR ALL PANELBOARDS

FOR CONSTRUCTION
FULLY SPRINKLERED

Revisions:	Date

CONSULTANTS:

HDR Architecture, Inc.
1101 King Street | Suite 400 | Alexandria, Virginia 22314-2944 | 703.518.8500

ARCHITECT/ENGINEERS:

ARCHITECTURE ENGINEERING INTERIOR DESIGN DESIGN/BUILD
ASTORINO
227 Fort Pitt Boulevard Pittsburgh Pennsylvania 15222
TEL 412 765 1700 FAX 412 765 1711 www.astorino.com

Drawing Title: **Electrical Panelboard Schedules - 2nd Floor**

Approved: Project Director

Project Title: **VA CARES CONSOLIDATION VAMC, PITTSBURGH, PA RESEARCH OFFICE BLDG.**

Location: **VAPHS UNIVERSITY DRIVE**

Date: **08-18-10** | Checked: **TMR** | Drawn: **LLG**

Project Number: **646CA2500R**

Building Number: **30**

Drawing Number: **EP6-232**

Dwg. -- of --

Office of Facilities Management

Department of Veterans Affairs

VA FORM 08-6231, OCT 1978

P:\Project\200542500\CAD\UNIVERSITY DRIVE\Research Office Building\Electrical\EP6-232.dwg LGARDNER 11/23/09 : 11:00:46

PANELBOARD '30-LS2HA'

POS NO	LOAD DESCRIPTION	WIRE SIZE	LOAD Kva	C/B SIZE	PHASE A	PHASE B	PHASE C	C/B SIZE	LOAD Kva	WIRE SIZE	LOAD DESCRIPTION	POS NO
1	LIGHTING - OPEN AREA	12	.8	20/1	*						SPACE	2
3	LIGHTING - AISLE WAY	12	1.0	20/1		*					SPACE	4
5	LIGHTING - OPEN AREA	12	6.5	20/1			*				SPACE	6
7	LIGHTING - WORK AREA	12	.4	20/1	*						SPACE	8
9	LIGHTING - BRIDGE & ELEVATOR LOBBY	10	0.69	20/1		*					SPACE	10
11	LIGHTING - ROOF ELEVATOR LOBBY	10	0.385	20/1			*				SPACE	12
13	SPACE				*						SPACE	14
15	SPACE					*					SPACE	16
17	SPACE						*				SPACE	18
19	SPARE			20/1	*			20/1			SPARE	20
21	SPARE			20/1		*		20/1			SPARE	22
23	SPARE			20/1			*	20/1			SPARE	24
25	SPARE			20/1	*				5.4		PANELBOARD - LS2LA VIA T-5	26
27	SPARE			20/1		*		70/3	6.0			28
29	SPARE			20/1			*		5.8			30

VOLTAGE: 480/277V 3Ø, 4W		PHASE A 6.60	LOCATION: SECOND FLOOR
SIZE/TYPE BUS: 225A	A.I.C.: 22,000	PHASE B 7.69	MOUNTING: SURFACE
SIZE/TYPE MAINS: MLO		PHASE C 12.69	FED FROM: LSBHA
LUGS:		SUB TOTAL (kva) 26.98	REMARKS:

PANELBOARD '30-LS2LA'

POS NO	LOAD DESCRIPTION	WIRE SIZE	LOAD Kva	C/B SIZE	PHASE A	PHASE B	PHASE C	C/B SIZE	LOAD Kva	WIRE SIZE	LOAD DESCRIPTION	POS NO
1	LIGHTING HELIPAD	12	1.4	20/1	*			20/1	1.2	12	FUEL WATER SEPERATOR	2
3	LIGHTING HELIPAD	12	1.4	20/1		*		20/1	1.0	12	DELUGE VALVE	4
5	LIGHTING HELIPAD	12	1.4	20/1			*	20/1	0.80	12	1ST FLOOR TRANSPONDER	6
7	DOOR ACCESS CONTROLLER - 1ST FLOOR	10	1.0	20/1	*			20/1	0.80	12	2ND FLOOR TRANSPONDER	8
9	SECURITY PANEL - 1ST FLOOR	10	1.0	20/1		*		20/1	1.0	12	LIGHTING - ELEVATOR CAR	10
11	DOOR ACCESS CONTROLLER - 2ND FLOOR	10	1.0	20/1			*	20/1	1.0	12	LIGHTING - ELEVATOR CAR	12
13	DOOR ACCESS CONTROLLER - 2ND FLOOR	10	1.0	20/1	*						SPACE	14
15	SECURITY PANEL - 2ND FLOOR	10	.8	20/1		*					SPACE	16
17	DOOR MOTOR OPERATOR - ROOF	10	.8	20/1			*				SPACE	18
19	DOOR ACCESS CONTROLLER - ROOF	10	.8	20/1	*			20/1			SPARE	20
21	DOOR MOTOR CONTROLLER - BRIDGE	10	.8	20/1		*		20/1			SPARE	22
23	DOOR ACCESS CONTROLLER - BRIDGE	10	.8	20/1			*	20/1			SPARE	24
25	SPARE			20/1	*			20/1			SPARE	26
27	SPARE			20/1		*		20/1			SPARE	28
29	SPARE			20/1			*	20/1			SPARE	30
31	SPARE			20/1	*			20/1			SPARE	32
33	SPARE			20/1		*		20/1			SPARE	34
35	SPARE			20/1			*	20/1			SPARE	36
37	SPARE			20/1	*			20/1			SPARE	38
39	RADIO CONTROLLER	10	1.2	30/1		*		20/2	0.40	12	EVAPORATORS	40
41	BEACON LIGHT	10	1.2	30/1			*		0.40			42

VOLTAGE: 208/120V 3Ø, 4W		PHASE A 6.20	LOCATION: SECOND FLOOR
SIZE/TYPE BUS: 225A	A.I.C.: 22,000	PHASE B 7.60	MOUNTING: SURFACE
SIZE/TYPE MAINS: 175A-3P MCB		PHASE C 7.40	FED FROM: LS2HA VIA T-5
LUGS:		SUB TOTAL (kva) 21.20	REMARKS:

NOTE:

PROVIDE DOOR-IN-DOOR TYPE TRIMS FOR ALL PANELBOARDS

FOR CONSTRUCTION
FULLY SPRINKLERED

Revisions:	Date

CONSULTANTS:

HDR Architecture, Inc.

1101 King Street | Suite 400 | Alexandria, Virginia 22314-2944 | 703.518.8500

ARCHITECT/ENGINEERS:

ARCHITECTURE ENGINEERING INTERIOR DESIGN DESIGN/BUILD ASTORINO

227 Fort Pitt Boulevard Pittsburgh Pennsylvania 15222
TEL 412 765 1700 FAX 412 765 1711 www.astorino.com

Drawing Title: **Electrical Panelboard Schedules - 2nd Floor**

Approved: Project Director

Project Title: **VA CARES CONSOLIDATION VAMC, PITTSBURGH, PA RESEARCH OFFICE BLDG.**

Location: **VAPHS UNIVERSITY DRIVE**

Date: **08-18-10** | Checked: **TMR** | Drawn: **LLG**

Project Number: **646CA2500R**

Building Number: **30**

Drawing Number: **EP6-233**

Dwg. -- of --

Office of Facilities Management

Department of Veterans Affairs

VA FORM 08-6231, OCT 1978

P:\Project\2005425.00\CAD\UNIVERSITY DRIVE\Research Office Building\Electrical\EP6-233.dwg LGARDNER 11/23/09 ; 10:39:31

DUCT BANK CONDUIT SCHEDULE

DUCT SECTION NUMBER	CONDUIT NUMBER	WIRE SIZE	CONDUIT SIZE	COMMENTS
A	1	3-500KCMIL-5KV-SHD & 1-4/0(600V)GND	5"	5KV SERVICE FEEDER - BUILDING 30 - CCT#1E
	2	3-500KCMIL-5KV-SHD & 1-4/0(600V)GND	5"	5KV SERVICE FEEDER - BUILDING 30 - CCT#2E
	3	---	5"	SPARE
	4	---	5"	SPARE
B	1	3-500KCMIL-5KV-SHD & 1-4/0(600V)GND	5"	5KV SERVICE FEEDER - BUILDING 30 CCT #1E
	2	----	5"	SPARE
C	1	3-500KCMIL-5KV-SHD & 1-4/0(600V)GND	5"	5KV SERVICE FEEDER - BUILDING 30 CCT #2E
	2	----	5"	SPARE
D	1	3-500KCMIL-5KV-SHD & 1-4/0(600V)GND	EXISTING 5"	5KV SERVICE FEEDERS - BUILDING 30 - CCT#1E
	2	3-500KCMIL-5KV-SHD & 1-4/0(600V)GND	EXISTING 5"	5KV SERVICE FEEDERS - BUILDING 30 - CCT#2E
	3	----	EXISTING 5"	SPARE
	4	----	EXISTING 5"	SPARE
	5	----	EXISTING 5"	SPARE
	6	----	EXISTING 5"	SPARE
	7	----	EXISTING 5"	SPARE
	8	----	EXISTING 5"	SPARE
	9	----	EXISTING 5"	SPARE
	10	----	EXISTING 5"	SPARE
	11	----	EXISTING 5"	SPARE
	12	----	EXISTING 5"	SPARE
E	1	4-600KCMIL + 1 #3/0GND	4"	EMERGENCY ONLY FEEDER
	2	4-600KCMIL + 1 #3/0GND	4"	EMERGENCY ONLY FEEDER
	3	4-600KCMIL + 1 #3/0GND	4"	EMERGENCY ONLY FEEDER
	4	---	4"	SPARE
	5	COMMUNICATION CABLE PER MANUFACTURERS REQUIREMENTS	4"	REMOTE ANNUNCIATOR
	6	16 - #10 (2HR RATED CABLE, TYPE RHH)	4"	EQ, LS & ELEV. ATS CONTROL WIRING FIRE PUMP CONTROLLER
F	1	3 #4/0 + 1 #6	4"	GUARD BOOTH
	2	---	4"	SPARE
G	1	4 #6 + 1 #8	1 1/2"	ROLLING GATE
	2	---	1 1/2"	SPARE
H	1	2 #4 + 1 #6	1 1/2"	ARM GATE
	2	---	1 1/2"	SPARE
I	1	2 #6 + 1 #8	1"	ILLUMINATED SIGN
	2	---	1"	SPARE
J	1	3 #4/0 + 1 #2	4"	GUARD BOOTH PANELBOARD
	2	4 #6 + 1 #8	4"	ROLLING GATE
	3	10 #4 + 1 #6	4"	ARM GATE
	4	2 #6 + 1 #8	4"	ILLUMINATED SIGN
	5	---	4"	SPARE
	6	---	4"	SPARE
K	1	2 #8 & 1 #10	1 1/2"	LIGHTING STANDARD POWER CONDUCTOR
L	1	4 #4 + 1 #6	1 1/2"	ARM GATES
	2	---	1 1/2"	SPARE
M	1	2 #8 & 1 #10	1 1/2"	LIGHTING STANDARD POWER CONDUCTOR

1 Section 'A'
SCALE: No Scale

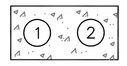

2 Section 'B'
SCALE: No Scale

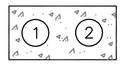

3 Section 'C'
SCALE: No Scale

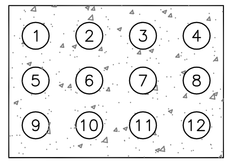

4 Section 'D'
SCALE: No Scale

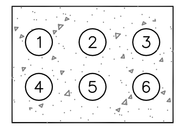

5 Section 'E'
SCALE: No Scale

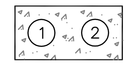

6 Section 'F'
SCALE: No Scale

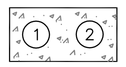

7 Section 'G'
SCALE: No Scale

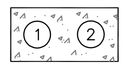

8 Section 'H'
SCALE: No Scale

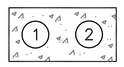

9 Section 'I'
SCALE: No Scale

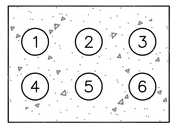

10 Section 'J'
SCALE: No Scale

11 Section 'K'
SCALE: No Scale

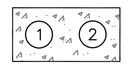

12 Section 'L'
SCALE: No Scale

13 Section 'M'
SCALE: No Scale

FOR CONSTRUCTION
FULLY SPRINKLERED

CONSULTANTS:

HDR

HDR Architecture, Inc.

1101 King Street | Suite 400 | Alexandria, Virginia 22314-2944 | 703.518.8500

Revisions: **Date**

ARCHITECT/ENGINEERS:

ARCHITECTURE ENGINEERING INTERIOR DESIGN DESIGN/BUILD ASTORINO

227 Fort Pitt Boulevard Pittsburgh Pennsylvania 15222
TEL 412 765 1700 FAX 412 765 1711 www.astorino.com

Drawing Title: **Electrical Details**

Approved: Project Director

Project Title: **VA CARES CONSOLIDATION VAMC, PITTSBURGH, PA RESEARCH OFFICE BLDG.**

Location: **VAPHS UNIVERSITY DRIVE**

Date: **08-18-10** | Checked: **TMR** | Drawn: **LLG**

Project Number: **646CA2500R**

Building Number: **30**

Drawing Number: **EP7-101**

Dwg. of

Office of Facilities Management

Department of Veterans Affairs

VA FORM 08-6231, OCT 1978

P:\Project\300542500\CAD\UNIVERSITY DRIVE\Research Office Building\Electrical\EP7-101.dwg LGARDNER 10/23/09 , 14:52:08

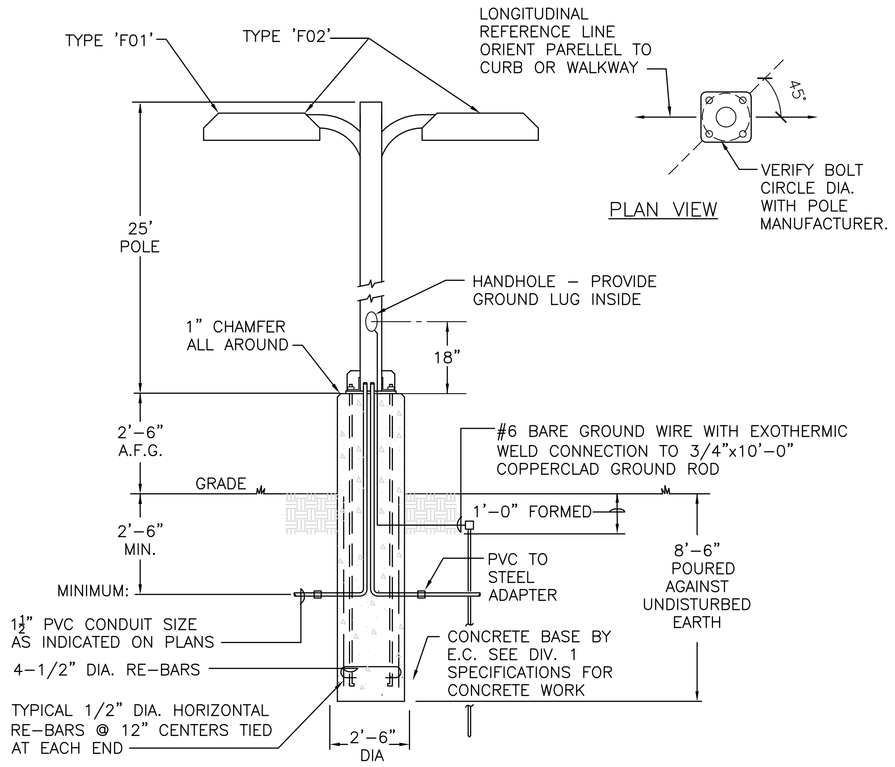

1 Base & Pole Detail, Type F01 & F02 Fixtures
SCALE: No Scale

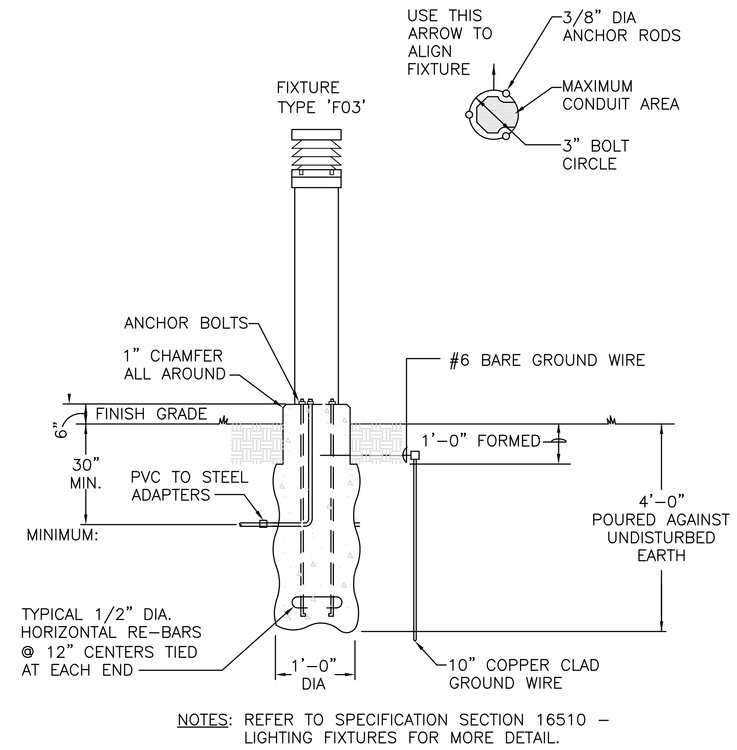

NOTES: REFER TO SPECIFICATION SECTION 16510 – LIGHTING FIXTURES FOR MORE DETAIL.

2 Base Detail, Type F03 Fixture
SCALE: Not To Scale

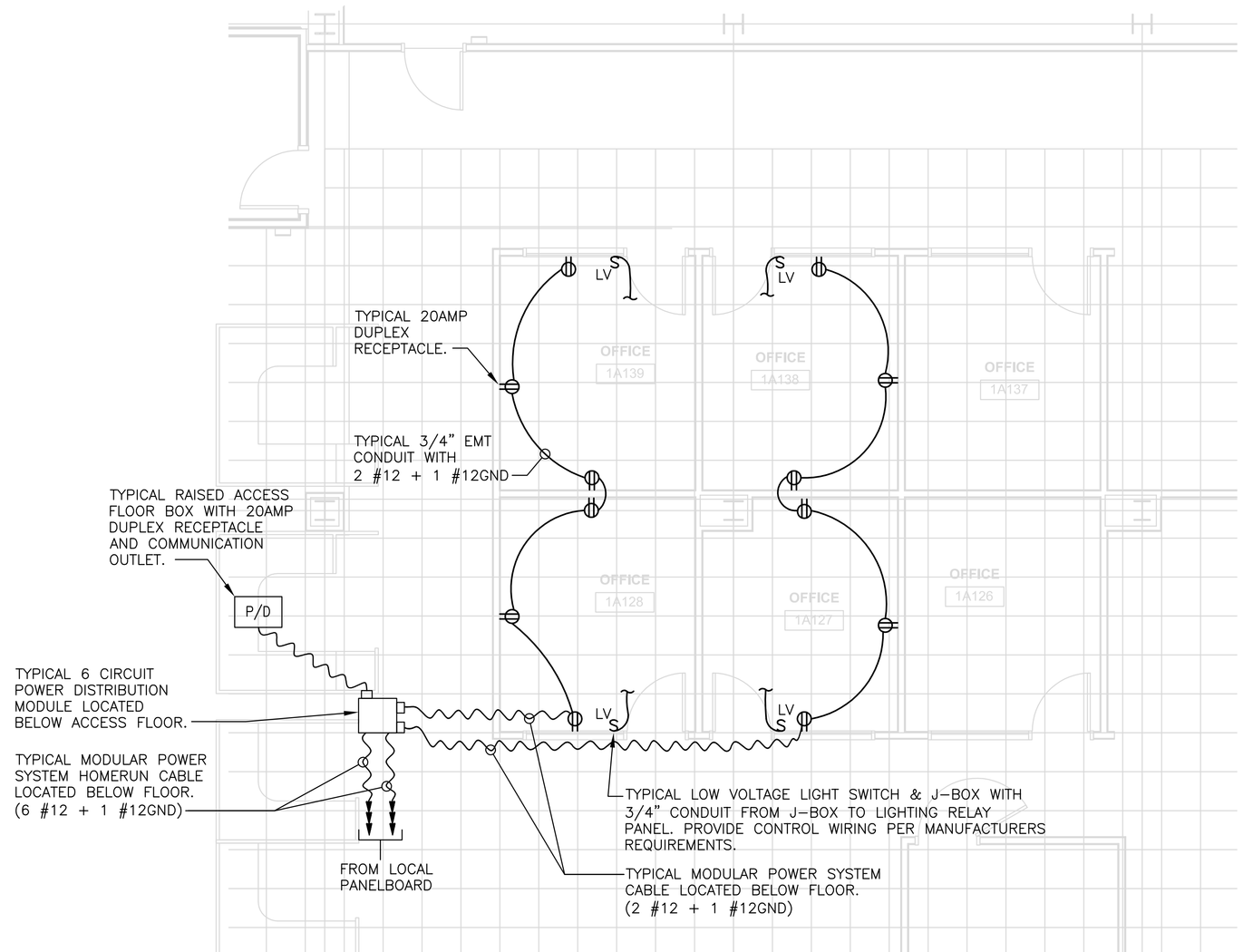

3 Wiring Detail - Hard Wall Partitions Located Above Access Floor
SCALE: No Scale

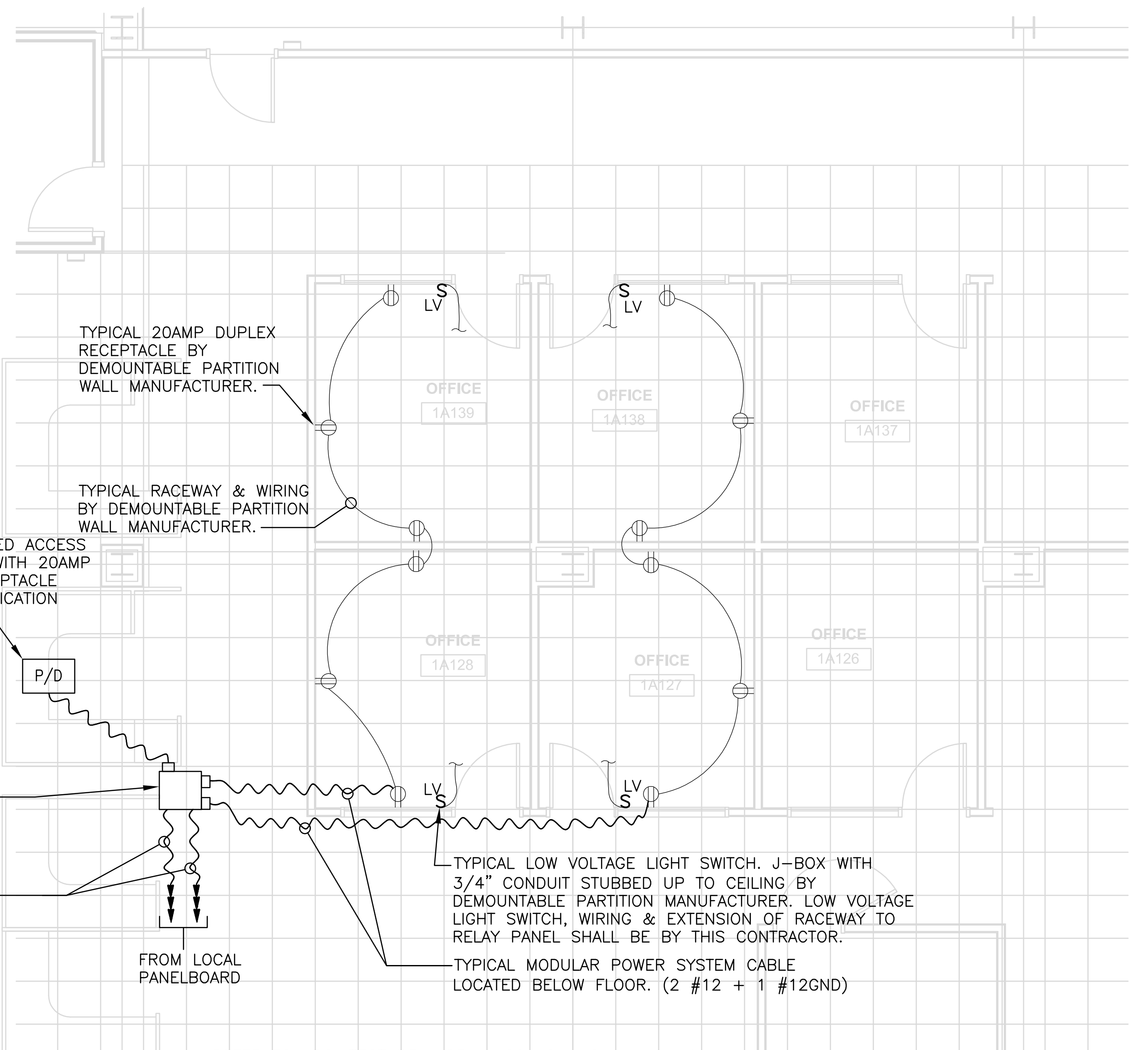

REFER TO ARCHITECTUREAL DRAWINGS AS1-121 & AS1-111 FOR DEMOUNTABLE PARTITION WALL LOCATIONS.

4 Wiring Detail - Demountable Partition Wall Located Above Access Floor - Add Alt.
SCALE: No Scale

FOR CONSTRUCTION
FULLY SPRINKLERED

Revisions:	Date

CONSULTANTS:

HDR

HDR Architecture, Inc.

1101 King Street | Suite 400 | Alexandria, Virginia 22314-2944 | 703.518.8500

ARCHITECT/ENGINEERS:

ARCHITECTURE ENGINEERING INTERIOR DESIGN DESIGN/BUILD

ASTORINO

227 Fort Pitt Boulevard Pittsburgh Pennsylvania 15222
TEL 412 765 1700 FAX 412 765 1711 www.astorino.com

Drawing Title: **Electrical Details**	Project Title: **VA CARES CONSOLIDATION VAMC, PITTSBURGH, PA RESEARCH OFFICE BLDG.**	Project Number: **646CA2500R**	**Office of Facilities Management**
Approved: Project Director	Location: **VAPHS UNIVERSITY DRIVE**	Building Number: **30**	
	Date: **08-18-10** / Checked: **TMR** / Drawn: **LLG**	Drawing Number: **EP7-102** Dwg. of	Department of Veterans Affairs

VA FORM 08-6231, OCT 1978

P:\Project\200542502\CAD\UNIVERSITY DRIVE\Research Office Building\Electrical\EP7-102.dwg LGARDNER 11/23/09 ; 09:45:03

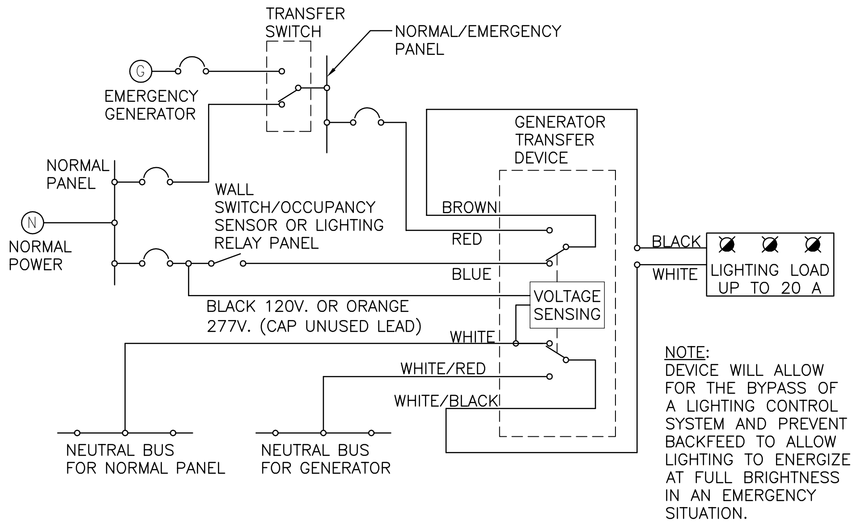

NOTE:
DEVICE WILL ALLOW FOR THE BYPASS OF A LIGHTING CONTROL SYSTEM AND PREVENT BACKFEED TO ALLOW LIGHTING TO ENERGIZE AT FULL BRIGHTNESS IN AN EMERGENCY SITUATION.

NORMAL POWER (SHOWN ABOVE)
AC LIGHTING BALLAST SUPPLIED BY NORMAL PANEL AND CONTROLLED BY WALL SWITCH.

GENERATOR OPERATION
AC LIGHTING BALLAST SUPPLIED BY GENERATOR THROUGH NORMAL/EMERGENCY PANEL AND INDEPENDENT OF WALL SWITCH POSITION. MANUFACTURER, BODINE CATALOG #GTD20A.

1 Emergency Bypass Lighting Switch Detail, Symbol SBD
SCALE: N.T.S.

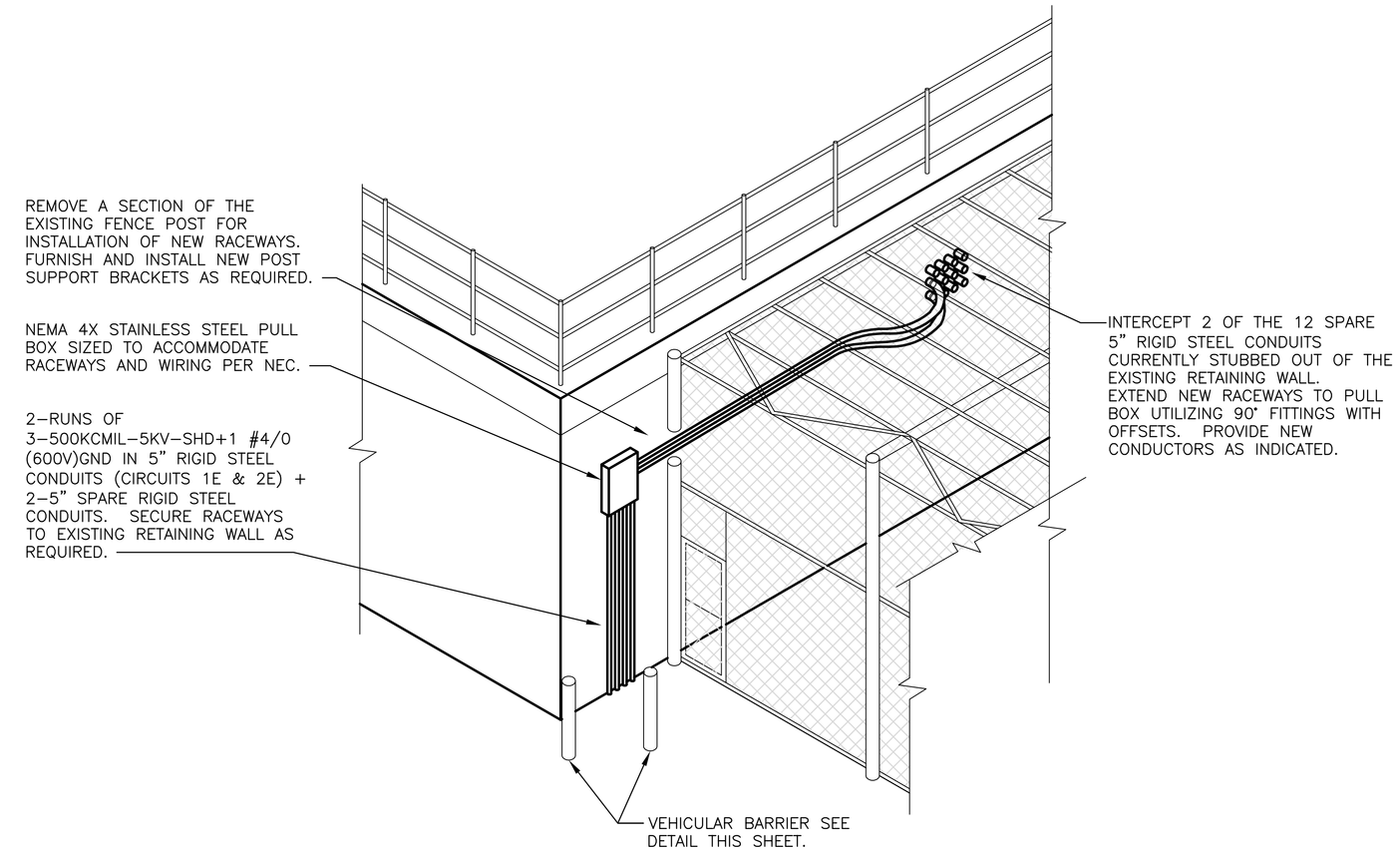

2 Raceway Mounting Detail For Retaining Wall
SCALE: N.T.S.

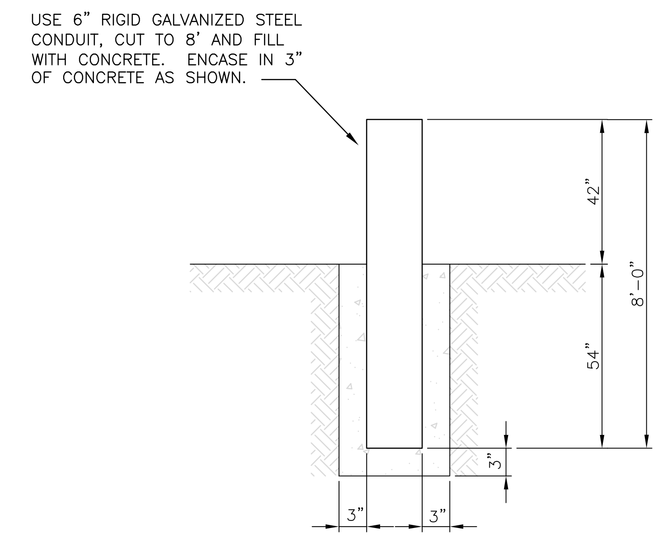

3 Vehiclular Barrier Detail
SCALE: N.T.S.

FOR CONSTRUCTION
FULLY SPRINKLERED

Revisions:	Date

CONSULTANTS:

HDR Architecture, Inc.
1101 King Street | Suite 400 | Alexandria, Virginia 22314-2944 | 703.518.8500

ARCHITECT/ENGINEERS:

ARCHITECTURE ENGINEERING INTERIOR DESIGN DESIGN/BUILD
ASTORINO
227 Fort Pitt Boulevard Pittsburgh Pennsylvania 15222
TEL 412 765 1700 FAX 412 765 1711 www.astorino.com

Drawing Title: **Electrical Details**
Approved: Project Director

Project Title: **VA CARES CONSOLIDATION VAMC, PITTSBURGH, PA RESEARCH OFFICE BLDG.**
Location: **VAPHS UNIVERSITY DRIVE**
Date: **00-00-0** | Checked: **TMR** | Drawn: **LLG**

Project Number: **646CA2500R**
Building Number: **30**
Drawing Number: **EP7-103**
Dwg. of

Office of Facilities Management
Department of Veterans Affairs

VA FORM 08-6231, OCT 1978

P:\Project\2005425.00\CAD\UNIVERSITY DRIVE\Research Office Building\Electrical\EP7-103.dwg LGARDNER 11/03/09 : 13:33:49

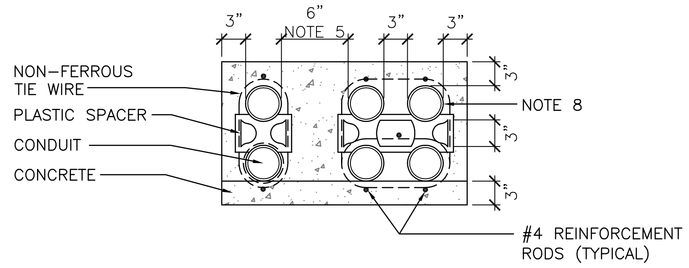

DUCT BANK NOTES:

1. CONCRETE SHALL BE 3,000 P.S.I. @ 28 DAYS OR AS SPECIFIED.
2. PROVIDE REINFORCING RODS ON TOP OF DUCTS WHEN CROSSING OR PLACING IN ROADWAYS. MINIMUM COVER BENEATH ROADWAYS SHALL BE 30".
3. MINIMUM COVER TO TOP OF ENVELOPE SHALL BE 24" U.N.O.
4. NON-FERROUS TIE WIRES TO BE IMBEDDED IN DUCT BED CONCRETE.
5. PROVIDE MINIMUM 6" SPACE BETWEEN POWER AND SIGNAL DUCTS. INCREASE SIZE AS REQUIRED.
6. REFER TO INDIVIDUAL DUCT SECTIONS AND CONDUIT AND CABLE SCHEDULE FOR NUMBER AND QUANTITY OF CONDUITS IN EACH DUCT BANK.
7. INSTALL YELLOW WARNING TAPE 12" ABOVE TOP OF DUCT BANK.
8. SCHEDULE 40 PVC CONDUIT SHALL BE USED EXCEPT THE FOLLOWING AREAS WHERE PVC COATED GALVANIZED RIGID STEEL IS REQUIRED.
   a. WHERE NOTED ON DRAWINGS.
   b. WHERE STEAM PIPING IS WITHIN 10 FEET OF DUCT BANK.
   c. ALL 90 DEGREE SWEEP ELBOWS.
   d. WHERE DUCT BANK PASSES BELOW ROADWAYS.
   e. WITHIN BLDG'S. BELOW SLAB.

1 Typical Duct Bank Detail
SCALE: No Scale

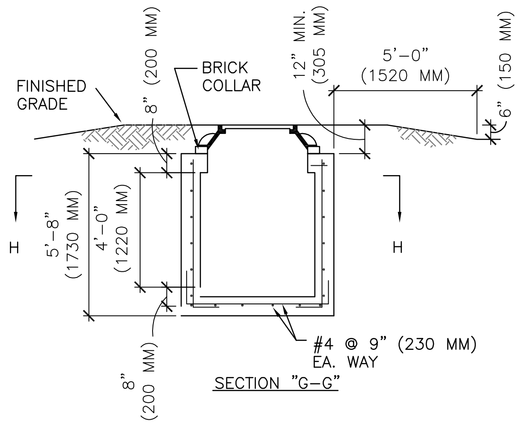

STRUCTURAL NOTES:

1. ALL REINFORCEMENT BARS FOR MANHOLES AND HANDHOLES SHALL BE #4.
2. TOP SLAB REINFORCEMENT CONSISTS OF BOTTOM BARS PLACED AS SHOWN. SHORT SPAN BARS SHALL BE ON THE BOTTOM LAYER.
3. BEND AND PLACE ALL REINFORCEMENT SO THAT IT SHALL BE 2" (50 MM) CLEAR OF ALL EXTERIOR SURFACES, 1-1/2" (40 MM) CLEAR OF ALL INTERIOR AND FLOOR SURFACES AND 1" (25 MM) CLEAR OF BOTTOM SURFACES OF TOP SLAB.
4. STRUCTURES SHALL BE OF REINFORCED CONCRETE. CONCRETE SHALL BE 3000 P.S.I. AT 28 DAYS UNLESS OTHERWISE SPECIFIED.

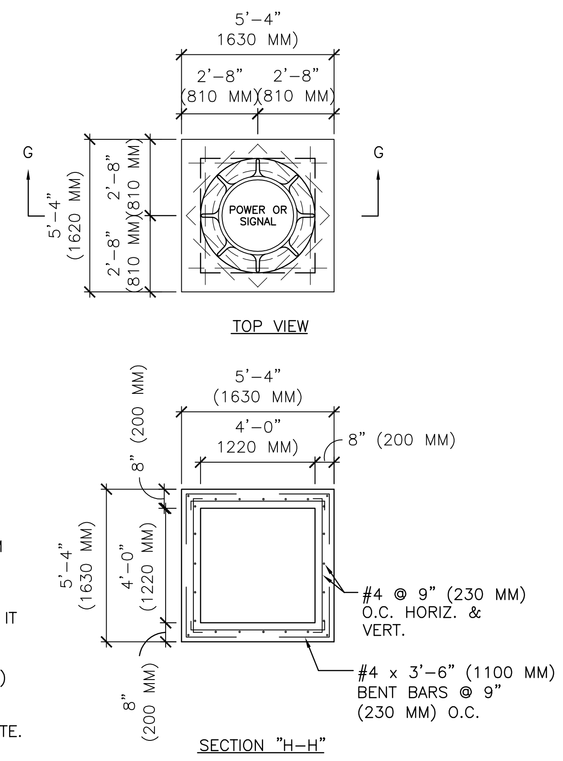

2 Structural Detail For Handholes - EHH-1
SCALE: Not To Scale

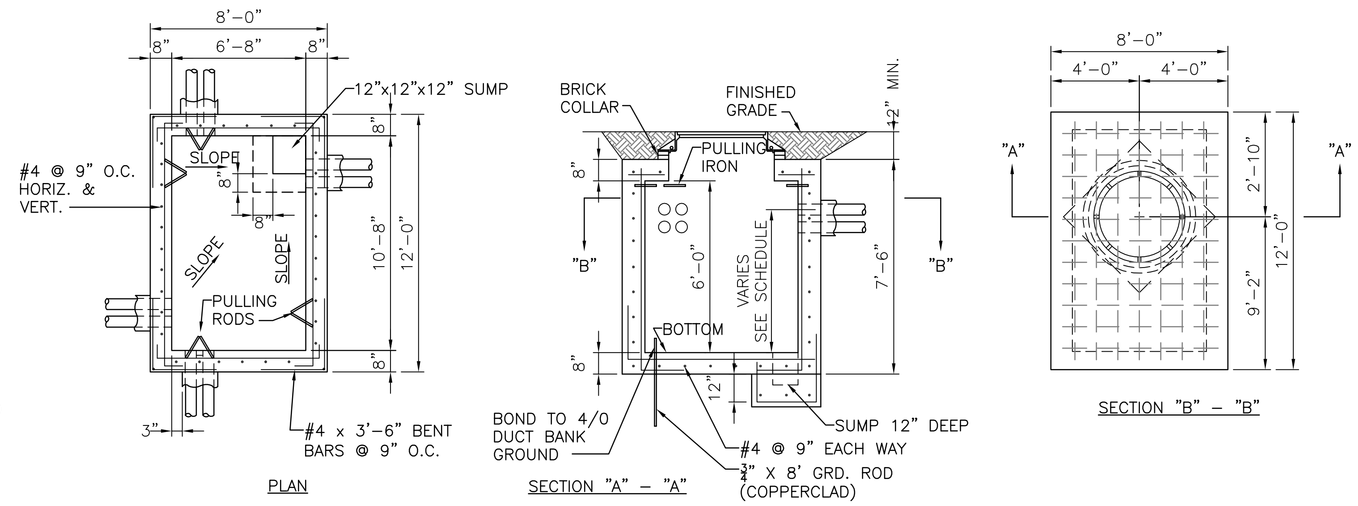

3 Structural Details for Manholes - EMH-1, EMH-2 and EMH-3
SCALE: No Scale

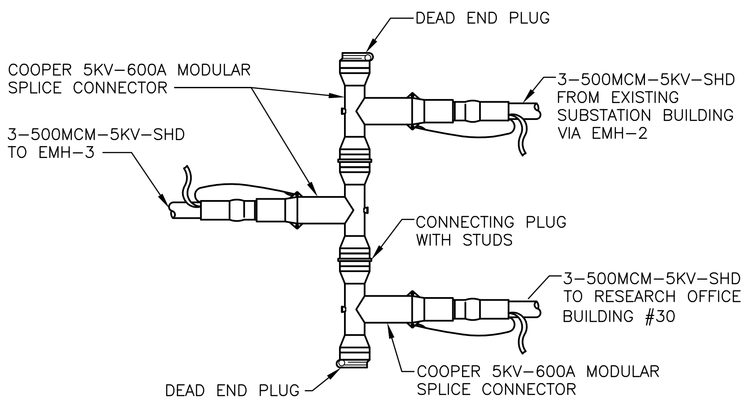

4 5KV Connector Detail (EMH-1)
SCALE: No Scale

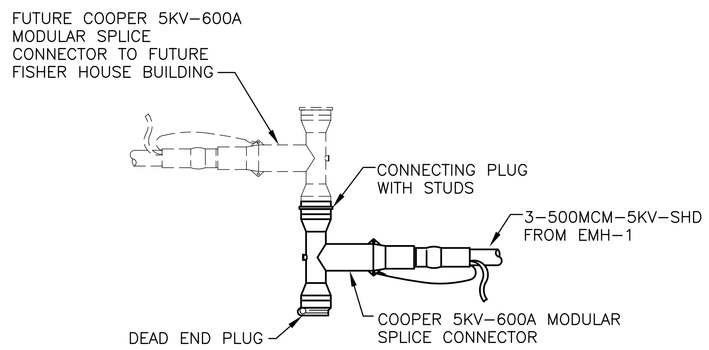

5 5KV Connector Detail (EMH-3)
SCALE: No Scale

FOR CONSTRUCTION
FULLY SPRINKLERED

Revisions:	Date

CONSULTANTS:

HDR Architecture, Inc.
1101 King Street | Suite 400 | Alexandria, Virginia 22314-2944 | 703.518.8500

ARCHITECT/ENGINEERS:

ARCHITECTURE ENGINEERING INTERIOR DESIGN DESIGN/BUILD
ASTORINO
227 Fort Pitt Boulevard Pittsburgh Pennsylvania 15222
TEL 412 765 1700 FAX 412 765 1711 www.astorino.com

Drawing Title	Electrical Details
Approved: Project Director	
Project Title	VA CARES CONSOLIDATION VAMC, PITTSBURGH, PA RESEARCH OFFICE BLDG.
Location	VAPHS UNIVERSITY DRIVE
Date	08-18-10
Checked	TMR
Drawn	LLG
Project Number	646CA2500R
Building Number	30
Drawing Number	EP7-104
Dwg. of	

Office of Facilities Management
Department of Veterans Affairs

VA FORM 08-6231, OCT 1978

P:\Project\20054250.00\CAD\UNIVERSITY DRIVE\Research Office Building\Electrical\EP7-104.dwg LGARDNER 10/29/09 10:39:56

SUNDIALER: I-CON STANDARD

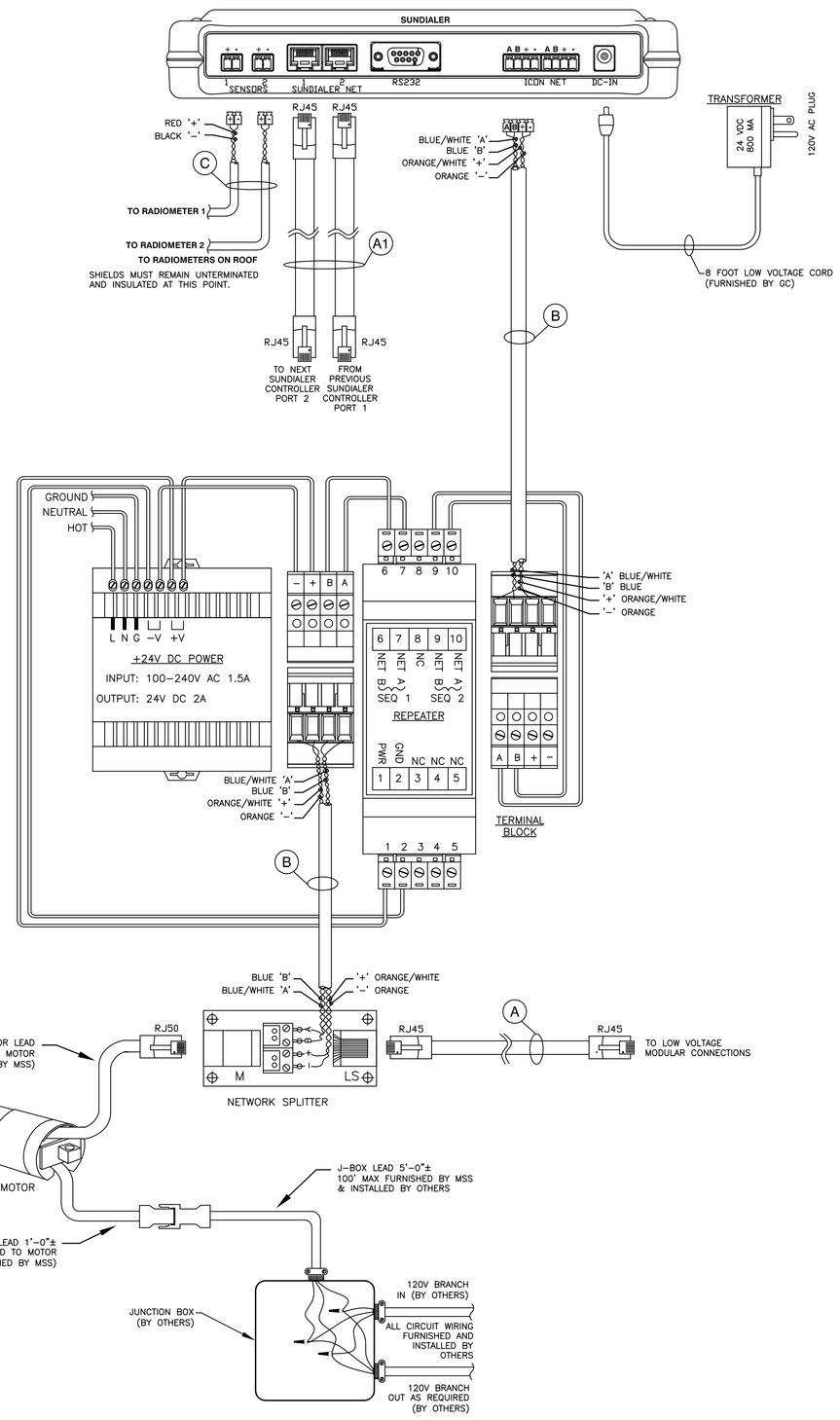

I-CON BUS SUPPLY/REPEATER

A) A BUS SUPPLY IS REQUIRED ON THE I-CON CONTROL NETWORK FOR EVERY 20 INTELLIGENT SWITCHES.

B) A REPEATER IS REQUIRED ON THE COMMUNICATIONS NETWORK EVERY 60 NODES (ICON BI OR ICON INTELLIGENT SWITCH)

C) A REPEATER IS REQUIRED FOR EVERY 1000 FT OF GREAT LAKES 70007 CABLE.

D) INSTALLED IN A 8"x8"x4" ELECTRICAL ENCLOSURE.

CRIMPING INSTRUCTIONS FOR SIX CONDUCTOR CABLES

LOW VOLTAGE CABLE
(FLAT MODULAR CABLE)

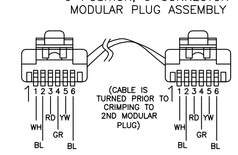

FLAT MODULAR CABLE CRIMP
PIN 1 – WHITE
PIN 2 – BLACK
PIN 3 – RED
PIN 4 – GREEN
PIN 5 – YELLOW
PIN 6 – BLUE

USOC CRIMPING INSTRUCTIONS FOR EIGHT CONDUCTOR CABLES

LOW VOLTAGE CABLE
(CAT5/CAT5E/CAT6 CABLE)

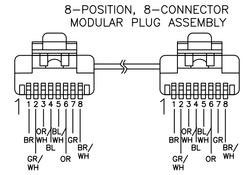

CATX CRIMP
PIN 1 – BROWN
PIN 2 – GREEN/WHITE
PIN 3 – ORANGE/WHITE
PIN 4 – BLUE
PIN 5 – BLUE/WHITE
PIN 6 – ORANGE
PIN 7 – GREEN
PIN 8 – BROWN/WHITE

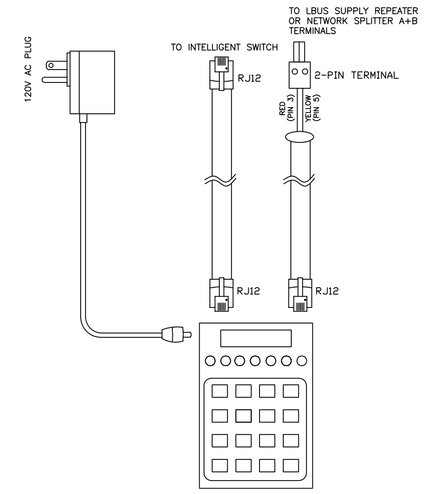

HAND HELD CONFIGURATOR

STANDARD ELECTRICAL NOTES

ALL ELECTRICAL-CONTROL EQUIPMENT (SWITCHES, MLCS, SACS, WACS, PHOTOCELLS, ANEMOMETERS, FTS UNITS, ETC.) AS INDICATED IS FURNISHED ONLY BY GENERAL CONTRACTOR, INSTALLED AND WIRED BY THE ELECTRICAL CONTRACTOR.

ALL ELECTRICAL-CONTROL EQUIPMENT MUST BE WIRED IN ACCORDANCE WITH THE WIRING DIAGRAMS PREPARED BY SYSTEM CONTRACTOR AND IN ACCORDANCE WITH THE N.E.C. AND LOCAL CODES.

EXCEPT FOR I-CON INTELLIGENT MOTOR AND / OR RTS MOTOR, PARALLEL AND/OR SERIES WIRING OF TWO OR MORE MOTORS ON SIMILAR POLES ON A SINGLE SWITCH OR ANY OTHER SIMILAR COMBINATION WILL VOID ANY APPLICABLE WARRANTY AND CAUSE PREMATURE MOTOR BURNOUT.

FOR I-CON INTELLIGENT MOTOR AND / OR RTS MOTOR, PARALLEL AND/OR SERIES WIRING IS ALLOWED UP TO MAXIMUM CIRCUIT CAPACITY

ALL WIRING DIAGRAMS HAVE BEEN PREPARED FOR RIGHT-HAND MOTORS, REGULAR ROLL OR LEFT-HAND MOTORS, REVERSE ROLL WHICH ARE WIRED SIMILARLY. RIGHT-HAND MOTORS, REVERSE ROLL AND LEFT-HAND MOTORS, REGULAR ROLL REQUIRE SWITCHING THE RED AND BLACK MOTOR WIRES AT THE MLC (MOTOR-LOGIC CONTROLLERS) OR THE SWITCH. THIS WILL PREVENT THE MOTORS FROM RUNNING IN OPPOSITE DIRECTIONS.

ALL CONTROL EQUIPMENT, SUCH AS MLCS (MOTOR-LOGIC CONTROLLERS), SACS/WACS (SUN-ACTIVATED CONTROLLERS/WIND ACTIVATED CONTROLLERS), AACS (ASTRONOMICAL CONTROLLERS), AND ALL EQUIPMENT THAT MAY HAVE A TRANSFORMER FOR LOW VOLTAGE MUST BE WIRED IN PHASE. IF NOT IN PHASE, PREMATURE TRANSFORMERS AND/OR MOTOR BURNOUT AND INCONSISTENT CONTROL OPERATION MAY OCCUR.

ELECTRICAL-CONTROL EQUIPMENT MAY CONTAIN ELECTROMECHANICAL RELAYS, ADJUSTMENT POINTS, FUSES, INDICATOR LIGHTS, AND OTHER DEVICES. THESE MUST BE CONVENIENTLY ACCESSIBLE FOR FUTURE SERVICING AND ADJUSTMENTS DURING NORMAL WORKING HOURS AND WITHOUT DISRUPTION TO THE EXISTING OPERATIONS. THIS EQUIPMENT SHALL BE CODED BY THE ELECTRICAL CONTRACTOR INDICATING SHADE LOCATIONS AND THE SPECIFIC MOTORS WHICH ARE CONTROLLED, AND IT SHALL BE CODED AT THE CONTROL EQUIPMENT AND CIRCUIT BREAKER. GREEN MOTOR WIRES ARE TO BE FASTENED TO GROUNDED JUNCTION BOXES, CONDUITS, OR ANOTHER SUITABLE BUILDING GROUND.

STANDARD (BI-DIRECTIONAL) MOTORS

THE STANDARD ELECTROSHADE -MOTOR LEAD IS A PVC 4 CONDUCTOR #18 STRANDED CABLE APPROXIMATELY ONE-FOOT (305MM) LONG WITH A 4 CONDUCTOR DISCONNECT-PLUG.

THE STANDARD ELECTROSHADE FURNISHED-ONLY JUNCTION-BOX LEAD IS THE SAME TYPE AS THE MOTOR LEAD AND HAS A PLUG COMPATIBLE TO IT. THIS LEAD IS APPROXIMATELY FIVE-FEET (1525 MM) LONG.

ONE OR TWO MOTORS CAN BE WIRED ON A SINGLE (DOUBLE-POLE, DOUBLE-THROW) SWITCH. PLEASE REFER TO DRAWING NO. M-160 FOR POINT-TO-POINT CONNECTION. HOWEVER, THREE OR FOUR MOTORS WIRED TO A SINGLE SWITCH REQUIRE THE USE OF AN MLC; FIVE TO EIGHT MOTORS REQUIRE TWO MLCS; NINE TO 12 REQUIRE THREE; AND SO FORTH. SEE DRAWINGS NO. M145 AND M146.

FTS MOTORS

THE STANDARD ELECTROSHADE -MOTOR LEAD IS A PVC 5 CONDUCTOR #18 STRANDED CABLE APPROXIMATELY ONE-FOOT (305MM) LONG WITH A 6 CONDUCTOR DISCONNECT-PLUG. THE STANDARD ELECTROSHADE FURNISHED-ONLY JUNCTION-BOX LEAD IS THE SAME TYPE AS THE MOTOR LEAD AND HAS A PLUG COMPATIBLE TO IT. THIS LEAD IS APPROXIMATELY FIVE-FEET (1525 MM) LONG.

ONE OR FOUR FTS SYSTEMS CAN BE WIRED ON A SINGLE PUSH-BUTTON SWITCH. PLEASE REFER TO DRAWING NO. EP7-107 FOR POINT-TO-POINT CONNECTION. HOWEVER, FOUR OR MORE FTS SYSTEMS WIRED TO A SINGLE SWITCH REQUIRE THE USE OF A SGC; FIVE TO EIGHT MOTORS REQUIRE ONE SGC; NINE TO 12 REQUIRE TWO; AND SO FORTH.

SOME POINT-TO-POINT WIRING DIAGRAMS MAY NOT INCLUDE MOTOR DISCONNECT-PLUGS, JUNCTION BOXES, AND CABLE RACEWAYS THAT MAY BE ESSENTIAL FOR A COMPLETE INSTALLATION.

TYPICAL ELECTRICAL RATING FOR STANDARD MOTORS:
MOTOR 120 VOLTS 60HZ 2.2 AMPS 246 WATTS

ACTUAL ELECTRICAL RATING IS JOB SPECIFIC AND IS BASED ON REQUIRED MOTOR AND SELECTED CONTROL SYSTEM.

CABLE LEGEND FOR I-CON SYSTEM

A	CAT5 – FOR LOW VOLTAGE DRY CONTACT CONNECTIONS 24AWG 4UTP (8-CONDUCTOR STRANDED UNSHIELDED TWISTED PAIR) OLYMPIC WIRE AND CABLE (www.olympicwire.com 1-800-526-2269) PART No. 3078M5FH. RJ-45 MODULAR PLUG CRIMPED (USOC) ON BOTH ENDS CAT5 – FOR LOW VOLTAGE DRY CONTACT CONNECTIONS IN PLENUM AREAS 24AWG 4UTP (8-CONDUCTOR SOLID UNSHIELDED TWISTED PAIR) OLYMPIC WIRE AND CABLE (www.olympicwire.com 1-800-526-2269) PART No. 3604M55 SOLID CONDUCTOR RJ-45 MODULAR PLUGS CRIMPED (USOC) ON BOTH ENDS DISTANCE LIMITATION = 400' CUMULATIVE (BY OTHERS)
A1	CAT5 – CABLE FOR RS-485 CONNECTIONS 24AWG 4UTP (8-CONDUCTOR STRANDED UNSHIELDED TWISTED PAIR) RJ-45 MODULAR PLUGS CRIMPED (EIA568A) ON BOTH ENDS CONNECTED TO 2'-0" USB CABLE (USB/RJ-45) DISTANCE LIMITATION = 4000' CUMULATIVE (BY OTHERS)
A2	CAT5 – CABLE FOR ETHERNET CONNECTIONS 24AWG 4UTP (8-CONDUCTOR STRANDED UNSHIELDED TWISTED PAIR) RJ-45 MODULAR PLUGS CRIMPED (EIA568A) ON BOTH ENDS DISTANCE LIMITATION = 8' (BY OTHERS)
A3	CAT5 – EXTENSION CABLE (E CABLE) CAT5- FOR LOW VOLTAGE DRY CONTACT CONNECTIONS 24AWG 4UTP (8-CONDULTOR STRANDED UNSHIELDED TWISTED PAIR) OLYMPIC WIRE AND CABLE (www.olympicwire.com 1-800-526-2269) PART No. 3078M5FH RJ-45 MODULAR PLUG CRIMPED (USOC) ON BOTH ENDS FOR PLENUM AREAS – 24AWG 4UTP (8-CONDUCTOR SOLID UNSHIELDED TWISTED PAIR) OLYMPIC WIRE AND CABLE (www.olympicwire.com 1-800-526-2269) PART No. 3604M55 SOLID CONDUCTOR RJ-45 MODULAR PLUGS CRIMPED (USOC) ON BOTH ENDS DISTANCE LIMITATION = 1500' INCLUSIVE OF LONWORKS/ICON NETWORK WIRING ("B") = 400' INCLUSIVE OF DRY CONTACT SWITCH WIRING ("A") (BY OTHERS)
B	LONWORKS CABLE – FOR I-CON NETWORK CONNECTIONS 22AWG 2UTP (4 CONDUCTOR STRANDED UNSHIELDED TWISTED PAIR) GREAT LAKES WIRE AND CABLE (www.greatwire.com -586-979-0022) PART # 70007-RIB-01, LEVEL 4 AUTOMATION CABLE PHOENIX PHOENIX TERMINAL CONNECTORS ON BOTH ENDS "-" = ORANGE "+" = ORANGE/WHITE "B" = BLUE "A" = BLUE/WHITE DISTANCE LIMITATION = 1500' CUMULATIVE = 1200' NODE TO NODE (BY OTHERS)
C	BELDEN TYPE 82760 18AWG 1STP (2-CONDUCTOR SHIELDED TWISTED PAIR) FOR PC INTERFACE/ANALOG I/O TO SENSOR CONNECTIONS PHOENIX CONNECTOR/CONNECTION "+" = RED "-" = BLACK '+' = BLUE/RED '-' = GREY/BLACK DISTANCE LIMITATION = 500' CUMULATIVE (BY OTHERS)
D	COAX – USES BNC TERMINATIONS FOR ANALOG I/O TO SENSOR CONNECTIONS TERMINAL BLOCK/WIRE SPLICE CONNECTION DISTANCE LIMITATION = 1000' CUMULATIVE (BY OTHERS)

NOTES

1. PARALLEL WIRING TO NEXT DEVICE PER BRANCH CIRCUIT CAPACITY. ALL CONNECTION MUST MEET NATIONAL AND LOCAL CODES AND REGULATIONS.
2. MAXIMUM VOLTAGE FOR ALL UNMARKED CABLE IS 43.5 VDC.

RADIOMETER
MOUNTED EXTERNALLY ON THE ROOF

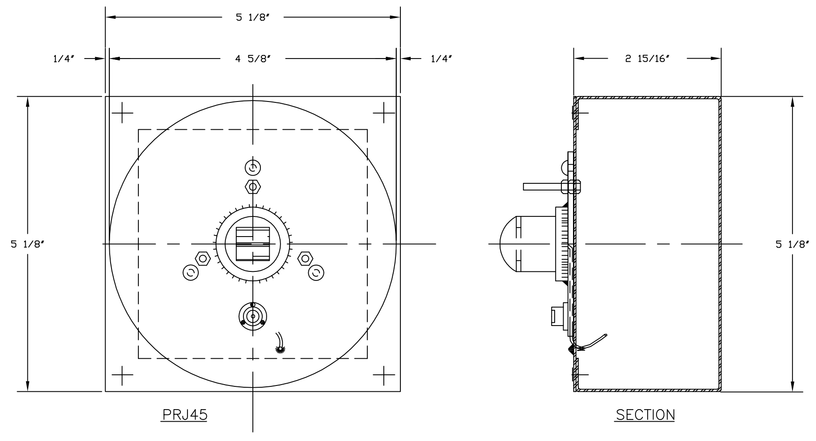

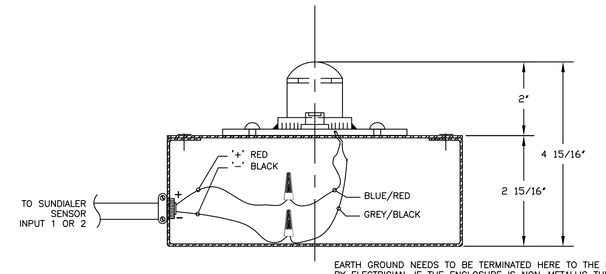

THE MK 1-C SOL-A-METER IS A WEATHERPROOF PYRANOMETER (FOR TOTAL RADIATION FROM BOTH SUN AND SKY). STANDARD SENSITIVITY IS 50MV PER CAL./CM. MIN. (2.5 OR 5MV PER CAL./CM. MIN. ON REQUEST). IMPENDENCE IS 1.0 OHM (0.05 AND 0.100HM FOR 2.5 AND 5.0MV RESPECTIVELY). BASE IS 5" IN DIAMETER. SHIPPING WEIGHT IS 1 1/2 LBS.

EARTH GROUND NEEDS TO BE TERMINATED HERE TO THE ENCLOSURE BY ELECTRICIAN. IF THE ENCLOSURE IS NON-METALLIC THEN THE SHIELD MUST TERMINATE TO EARTH GROUND WHICH SHOULD ADDITIONALLY TERMINATE TO PYRANOMETER/RADIOMETER BASE.

PLEASE NOTE:
A. RADIOMETER LOCATIONS TO BE EAST, SOUTH & WEST.
B. RADIOMETER TO BE MOUNTED CLEAR OF ANY SHADOWS.
C. RADIOMETER TO BE ROOF TOP MOUNTED.
D. BUBBLE FACING NORTH.

NOTE:
MAXIMUM LIMITATION OF 1500' TOTAL COMBINED OF B+C CABLING AND 1200' MAXIMUM BETWEEN ANY TWO DEVICES LINKED BY C OR B CABLING.

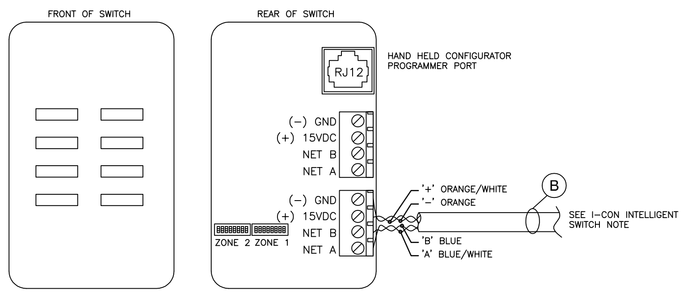

I-CON DUAL INTELLIGENT SWITCH

A) CAN BE CONNECTED AT BUS SUPPLY/REPEATER.

B) CAN BE CONNECTED AT A BUS INTERFACE (B.I.).

C) CAN BE CONNECTED ANYWHERE ALONG THE BUS LINE.

D) 15V POWER SUPPLY MUST BE PROVIDED IF NETWORK IS NOT CONNECTED TO A BUS SUPPLY/REPEATER.

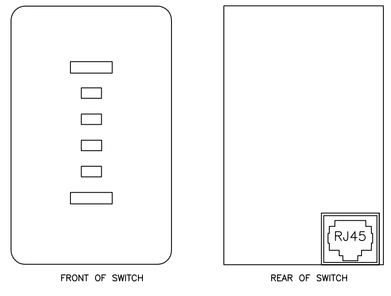

I-CON STANDARD SWITCH

1 Shade Details
SCALE: No Scale

FOR CONSTRUCTION
FULLY SPRINKLERED

Revisions:	Date

CONSULTANTS:

HDR Architecture, Inc.
1101 King Street | Suite 400 | Alexandria, Virginia 22314-2944 | 703.518.8500

ARCHITECT/ENGINEERS:

ARCHITECTURE ENGINEERING INTERIOR DESIGN DESIGN/BUILD
ASTORINO
227 Fort Pitt Boulevard Pittsburgh Pennsylvania 15222
TEL 412 765 1700 FAX 412 765 1711 www.astorino.com

Drawing Title	Electrical Details
Approved: Project Director	
Project Title	VA CARES CONSOLIDATION VAMC, PITTSBURGH, PA RESEARCH OFFICE BLDG.
Project Number	646CA2500R
Building Number	30
Location	VAPHS UNIVERSITY DRIVE
Date	08-18-10
Checked	TMR
Drawn	LLG
Drawing Number	EP7-105
Dwg. of	

Office of Facilities Management
Department of Veterans Affairs

VA FORM 08-6231, OCT 1978

P:\Project\20054250.00\CAD\UNIVERSITY DRIVE\Research Office Building\Electrical\EP7-104.dwg LGARDNER 10/29/09 - 10:39:56

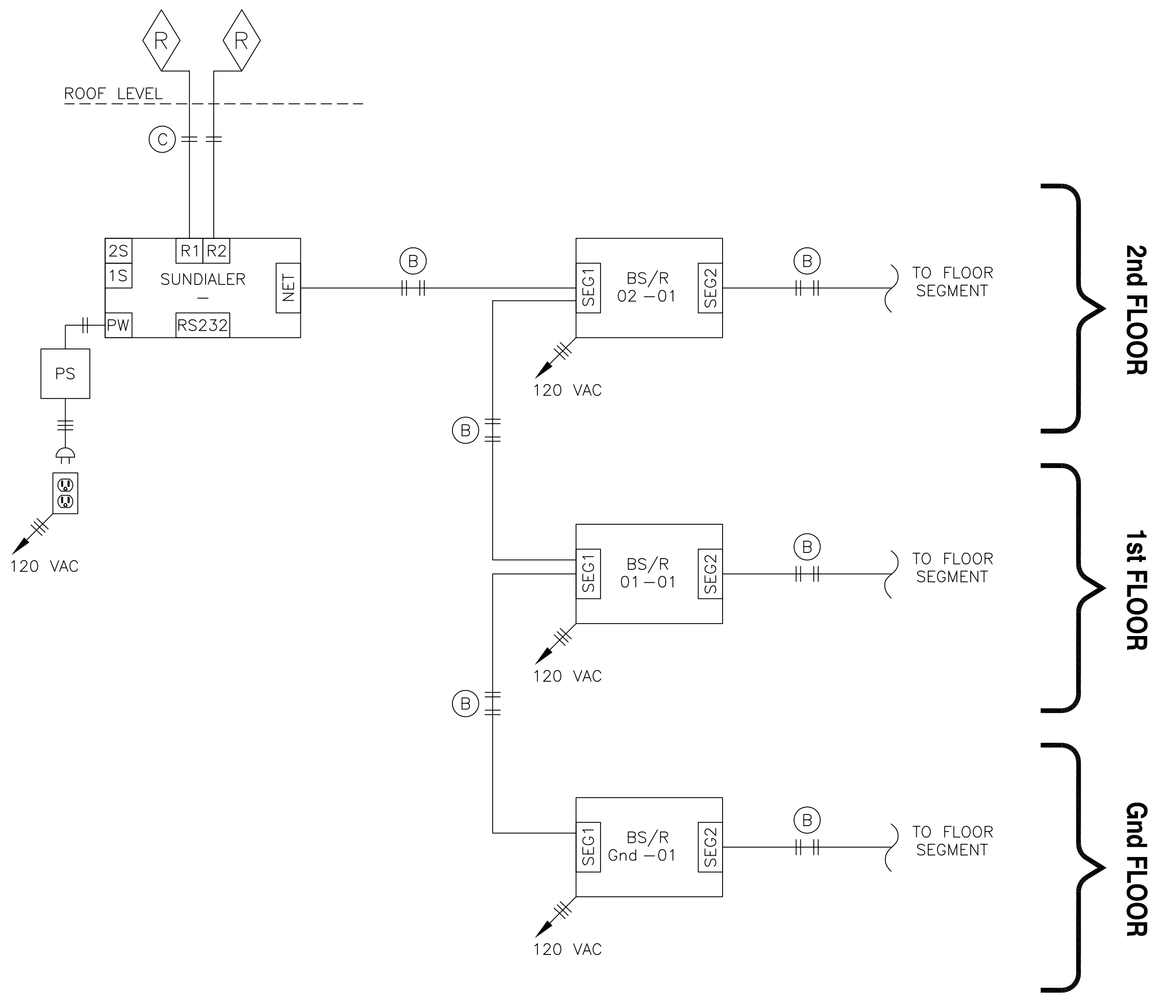

1 Shade Details
SCALE: No Scale

EQUIPMENT KEY FOR I-CON SYSTEM

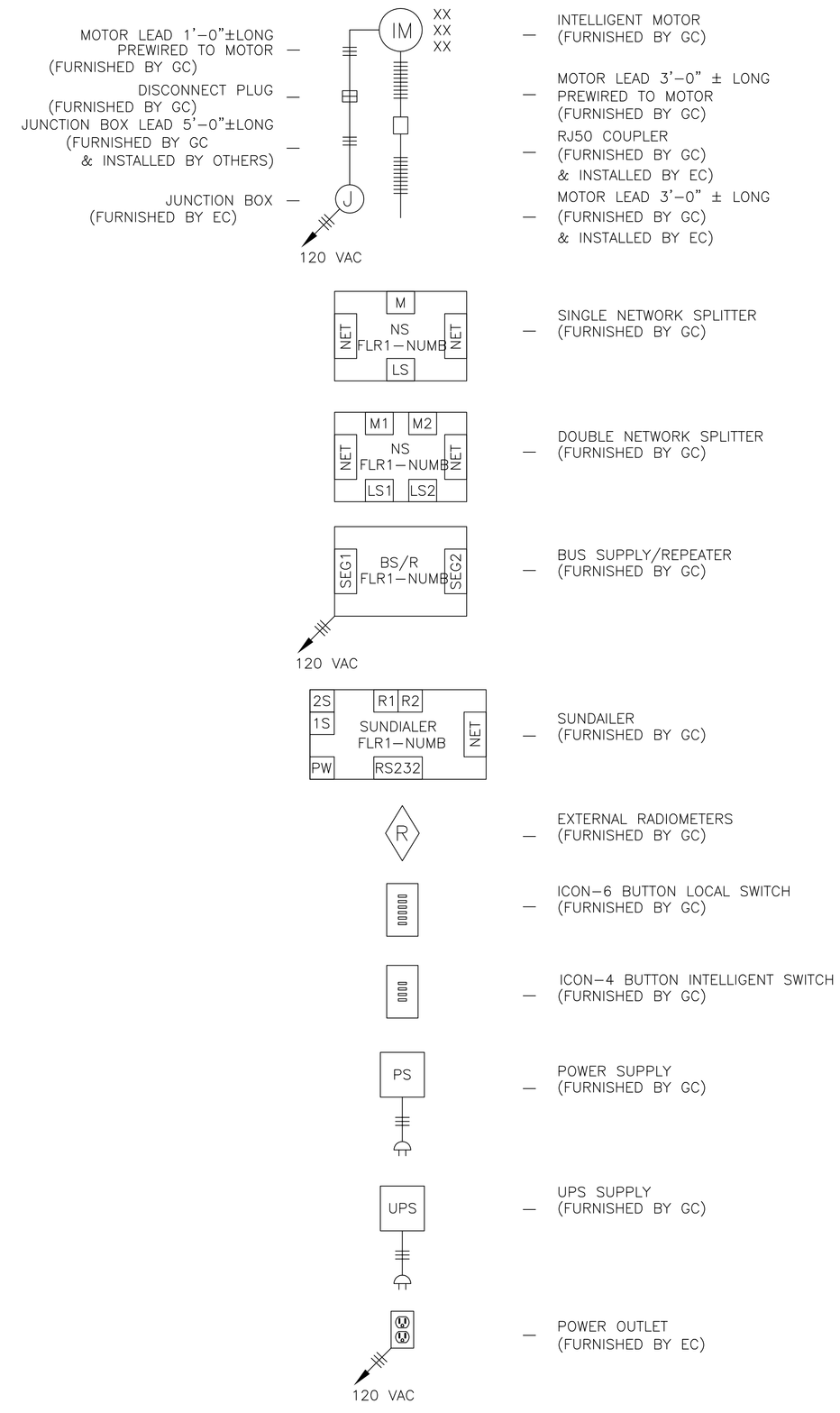

CABLE LEGEND FOR I-CON SYSTEM

A	CAT5 – FOR LOW VOLTAGE DRY CONTACT CONNECTIONS 24AWG 4UTP (8–CONDUCTOR STRANDED UNSHIELDED TWISTED PAIR) OLYMPIC WIRE AND CABLE (www.olympicwire.com 1–800–526–2269) PART No. 3078M5FH. RJ–45 MODULAR PLUG CRIMPED (USOC) ON BOTH ENDS CAT5 – FOR LOW VOLTAGE DRY CONTACT CONNECTIONS IN PLENUM AREAS 24AWG 4UTP (8–CONDUCTOR SOLID UNSHIELDED TWISTED PAIR) OLYMPIC WIRE AND CABLE (www.olympicwire.com 1–800–526–2269) PART No. 3604M55 SOLID CONDUCTOR RJ–45 MODULAR PLUGS CRIMPED (USOC) ON BOTH ENDS DISTANCE LIMITATION = 400' CUMULATIVE (BY OTHERS)
A1	CAT5 – CABLE FOR RS–485 CONNECTIONS 24AWG 4UTP (8–CONDUCTOR STRANDED UNSHIELDED TWISTED PAIR) RJ–45 MODULAR PLUGS CRIMPED (EIA568A) ON BOTH ENDS CONNECTED TO 2'–0" USB CABLE (USB/RJ–45) DISTANCE LIMITATION = 4000' CUMULATIVE (BY OTHERS)
A2	CAT5 – CABLE FOR ETHERNET CONNECTIONS 24AWG 4UTP (8–CONDUCTOR STRANDED UNSHIELDED TWISTED PAIR) RJ–45 MODULAR PLUGS CRIMPED (EIA568A) ON BOTH ENDS DISTANCE LIMITATION = 8' (BY OTHERS)
A3	CAT5 – EXTENSION CABLE (E CABLE) CAT5– FOR LOW VOLTAGE DRY CONTACT CONNECTIONS 24AWG 4UTP (8–CONDULTOR STRANDED UNSHIELDED TWISTED PAIR) OLYMPIC WIRE AND CABLE (www.olympicwire.com 1–800–526–2269) PART No. 3078M5FH RJ–45 MODULAR PLUG CRIMPED (USOC) ON BOTH ENDS FOR PLENUM AREAS – 24AWG 4UTP (8–CONDUCTOR SOLID UNSHIELDED TWISTED PAIR) OLYMPIC WIRE AND CABLE (www.olympicwire.com 1–800–526–2269) PART No. 3604M55 SOLID CONDUCTOR RJ–45 MODULAR PLUGS CRIMPED (USOC) ON BOTH ENDS DISTANCE LIMITATION = 1500' INCLUSIVE OF LONWORKS/ICON NETWORK WIRING ("B") = 400' INCLUSIVE OF DRY CONTACT SWITCH WIRING ("A") (BY OTHERS)
B	LONWORKS CABLE – FOR I–CON NETWORK CONNECTIONS 22AWG 2UTP (4 CONDUCTOR STRANDED UNSHIELDED TWISTED PAIR) GREAT LAKES WIRE AND CABLE (www.greatwire.com –586–979–0022) PART # 70007–RIB–GY, LEVEL 4 AUTOMATION CABLE PHOENIX PHOENIX TERMINAL CONNECTORS ON BOTH ENDS "–" = ORANGE "+" = ORANGE/WHITE "B" = BLUE "A" = BLUE/WHITE DISTANCE LIMITATION = 1500' CUMULATIVE = 1200' NODE TO NODE (BY OTHERS)
C	BELDEN TYPE 82760 18AWG 1STP (2–CONDUCTOR SHIELDED TWISTED PAIR) FOR PC INTERFACE/ANALOG I/O TO SENSOR CONNECTIONS PHOENIX CONNECTOR/CONNECTION "+" = RED "–" = BLACK '+' = BLUE/RED '–' = GREY/BLACK DISTANCE LIMITATION = 500' CUMULATIVE (BY OTHERS)
D	COAX – USES BNC TERMINATIONS FOR ANALOG I/O TO SENSOR CONNECTIONS TERMINAL BLOCK/WIRE SPLICE CONNECTION DISTANCE LIMITATION = 1000' CUMULATIVE (BY OTHERS)

NOTES

1. PARALLEL WIRING TO NEXT DEVICE PER BRANCH CIRCUIT CAPACITY. ALL CONNECTION MUST MEET NATIONAL AND LOCAL CODES AND REGULATIONS.
2. ADDRESS SCHEDULES REQUIRED.
3. MAXIMUM VOLTAGE FOR ALL UNMARKED CABLE IS 43.5 VDC.

FOR CONSTRUCTION
FULLY SPRINKLERED

CONSULTANTS:

HDR Architecture, Inc.
1101 King Street | Suite 400 | Alexandria, Virginia 22314-2944 | 703.518.8500

ARCHITECT/ENGINEERS:

ARCHITECTURE ENGINEERING INTERIOR DESIGN DESIGN/BUILD
ASTORINO
227 Fort Pitt Boulevard Pittsburgh Pennsylvania 15222
TEL 412 765 1700 FAX 412 765 1711 www.astorino.com

Revisions:	Date

Drawing Title: **Electrical Details**
Approved: Project Director

Project Title: **VA CARES CONSOLIDATION VAMC, PITTSBURGH, PA RESEARCH OFFICE BLDG.**
Location: **VAPHS UNIVERSITY DRIVE**
Date: **08-18-10** | Checked: **TMR** | Drawn: **LLG**

Project Number: **646CA2500R**
Building Number: **30**
Drawing Number: **EP7-106**
Dwg. of

Office of Facilities Management
Department of Veterans Affairs

VA FORM 08–6231, OCT 1978

P:\Project\20054250.00\CAD\UNIVERSITY DRIVE\Research Office Building\Electrical\EP7-106.dwg SSTR08EL 01/18/10 07:20:42

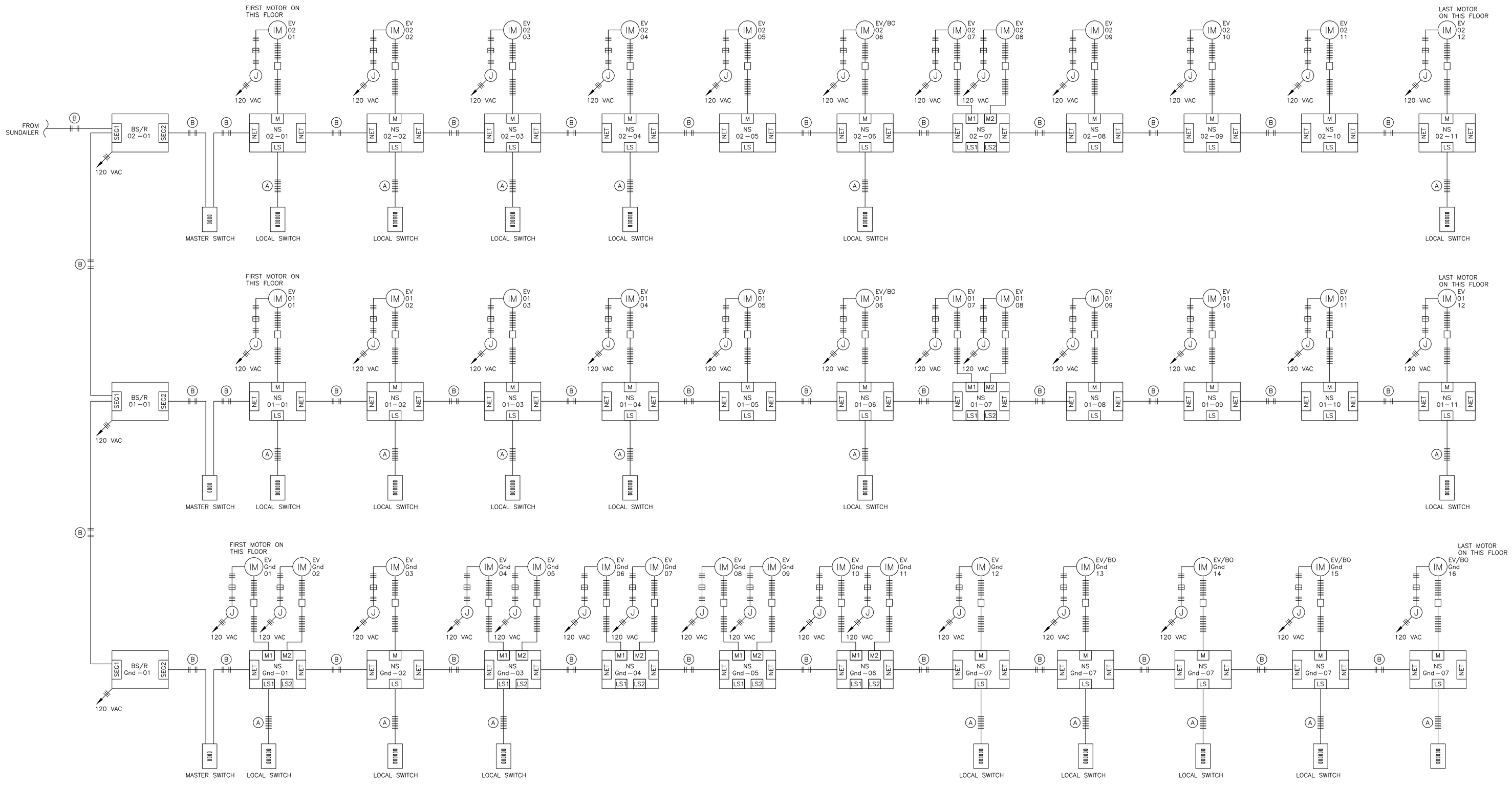

1 Shade Detail
SCALE: No Scale

FOR CONSTRUCTION
FULLY SPRINKLERED

Revisions:	Date

CONSULTANTS:

HDR Architecture, Inc.
1101 King Street | Suite 400 | Alexandria, Virginia 22314-2944 | 703.518.8500

ARCHITECT/ENGINEERS:

ARCHITECTURE ENGINEERING INTERIOR DESIGN DESIGN/BUILD
ASTORINO
227 Fort Pitt Boulevard Pittsburgh Pennsylvania 15222
TEL 412 765 1700 FAX 412 765 1711 www.astorino.com

Drawing Title: **Electrical Details**

Approved: Project Director

Project Title: **VA CARES CONSOLIDATION VAMC, PITTSBURGH, PA RESEARCH OFFICE BLDG.**

Location: **VAPHS UNIVERSITY DRIVE**

Date: **08-18-10** | Checked: **TMR** | Drawn: **LLG**

Project Number: **646CA2500R**

Building Number: **30**

Drawing Number: **EP7-107**

Dwg. of

Office of Facilities Management

Department of Veterans Affairs

VA FORM 08-6231, OCT 1978

P:\Project\20054250\CAD\UNIVERSITY DRIVE\Research Office Building\Electrical\EP7-104.dwg LGARDNER 10/29/09 : 10:39:56

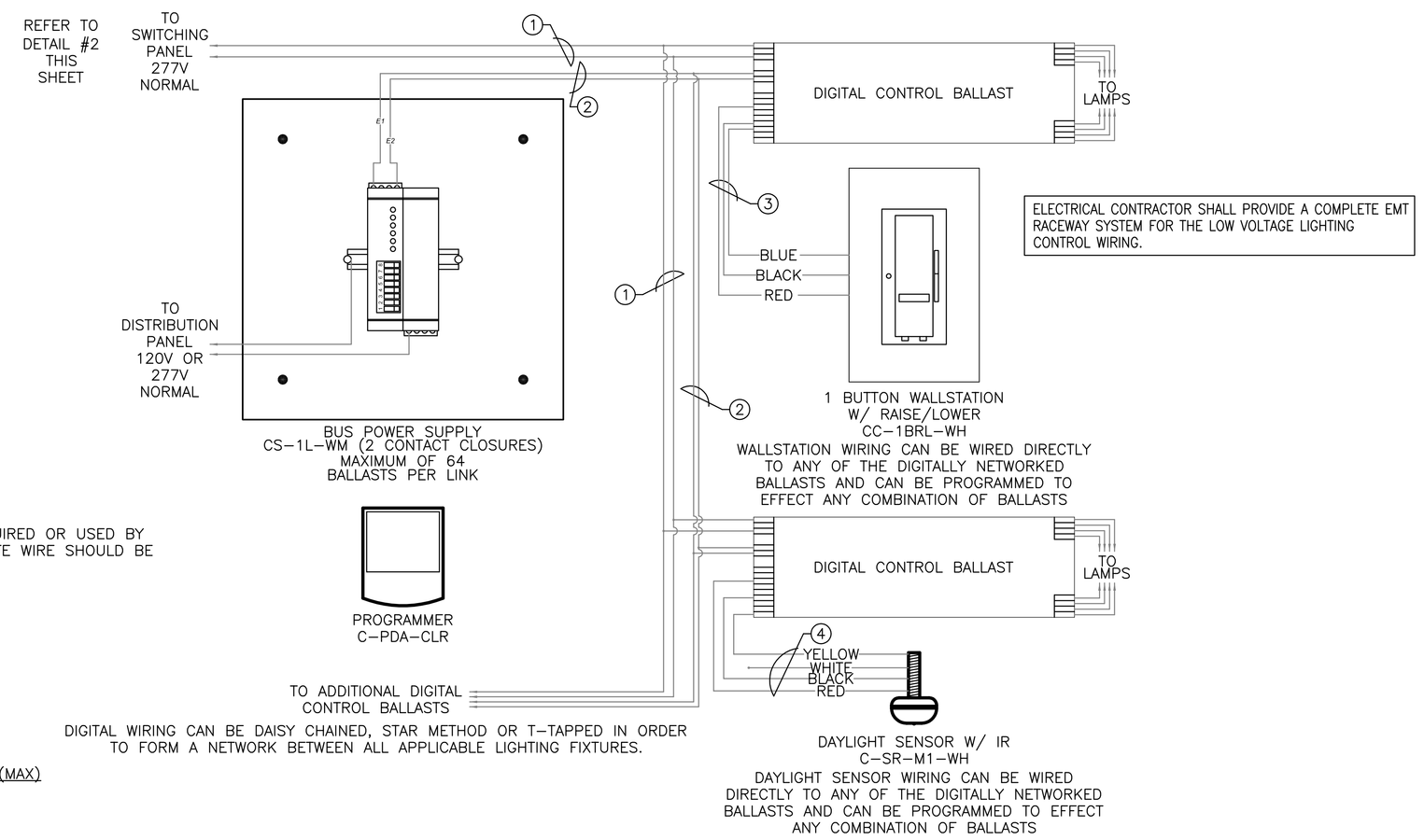

ELECTRICAL CONTRACTOR SHALL PROVIDE A COMPLETE EMT RACEWAY SYSTEM FOR THE LOW VOLTAGE LIGHTING CONTROL WIRING.

C-SR-M1-WH WIRING:

WIRE	TERMINAL
RED	+20V
BLACK	COMMON
YELLOW	DAYLIGHT
WHITE	IR

IF IR OUTPUT IS NOT REQUIRED OR USED BY A KEYPAD INPUT, THE WHITE WIRE SHOULD BE CAPPED.

CC-1BRL-WH WIRING:

WIRE	TERMINAL
RED	+20V
BLACK	COMMON
BLUE	IR

CS-1L-WH WIRING:

WIRE GUAGE	BUS LENGTH (MAX)
#12 AWG	2,200 FT
#14 AWG	1,400 FT
#16 AWG	900 FT
#18 AWG	570 FT

WIRING LEGEND:

1. 3#12 AWG (SH + N) INCLUDES GROUND WIRE
2. 2#12 AWG (E1 & E2), SEE CS-1L-WH WIRING INFO
3. 3#22 AWG TWISTED/SHIELDED PAIR
4. 4#22 AWG TWISTED/SHIELDED PAIR

AREAS CONTROLED WITH THIS SYSTEM:
BASEMENT:
N/A
GROUND FLOOR:
OPEN AREAS, PERIMETER OFFICES, EXAM ROOMS
FIRST FLOOR:
OPEN AREAS, PERIMETER OFFICES
SECOND FLOOR:
OPEN AREAS, PERIMETER OFFICES

1 Typical Daylight Lighting Control System Wiring Diagram - Base

SCALE: No Scale

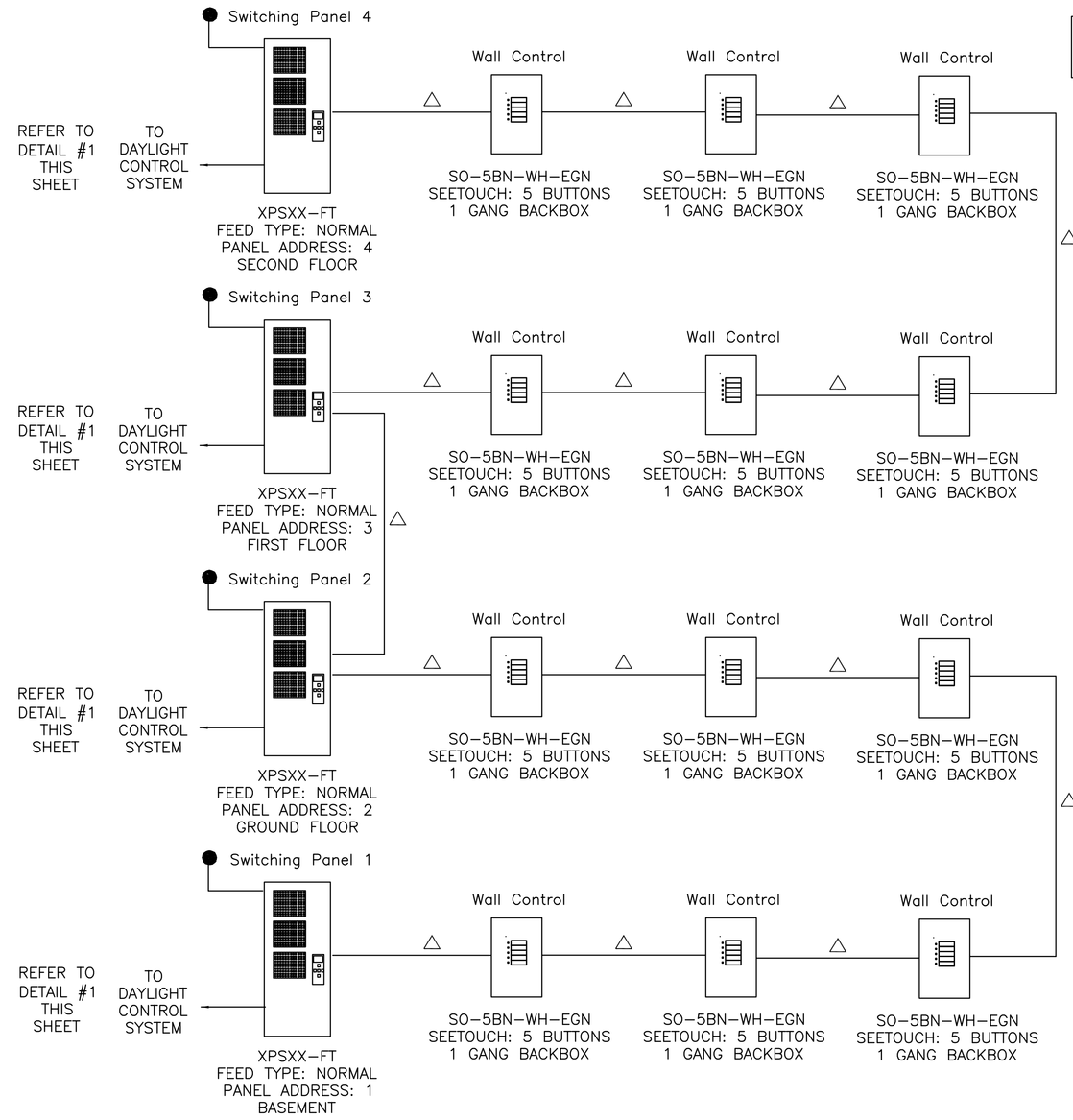

ELECTRICAL CONTRACTOR SHALL PROVIDE A COMPLETE EMT RACEWAY SYSTEM FOR THE LOW VOLTAGE LIGHTING CONTROL WIRING.

WIRING LEGEND:

● Branch Circuit Feeds

△ Lutron cable GRX-CBL-46L (Non-Plenum) or GRX-PCBL-46L (Plenum rated). Otherwise use 2 #12AWG (2.5mm2), 1 Belden #9461 (or equivalent), and between panels add 1 #18AWG (1.0mm2) for emergency sensing.

▽ 4 #22 AWG

● 2#12 AWG (2.5mm2)

AREAS CONTROLED WITH THIS SYSTEM:
BASEMENT:
WHOLE FLOOR
GROUND FLOOR:
ELEVATOR LOBBY, LINEAR WORK AREA & AISLE WAYS
FIRST FLOOR:
ELEVATOR LOBBY, LINEAR WORK AREA & AISLE WAYS
SECOND FLOOR:
ELEVATOR LOBBY, LINEAR WORK AREA & AISLE WAYS

1 Core Switching Lighting Control System Wiring Diagram - Base

SCALE: No Scale

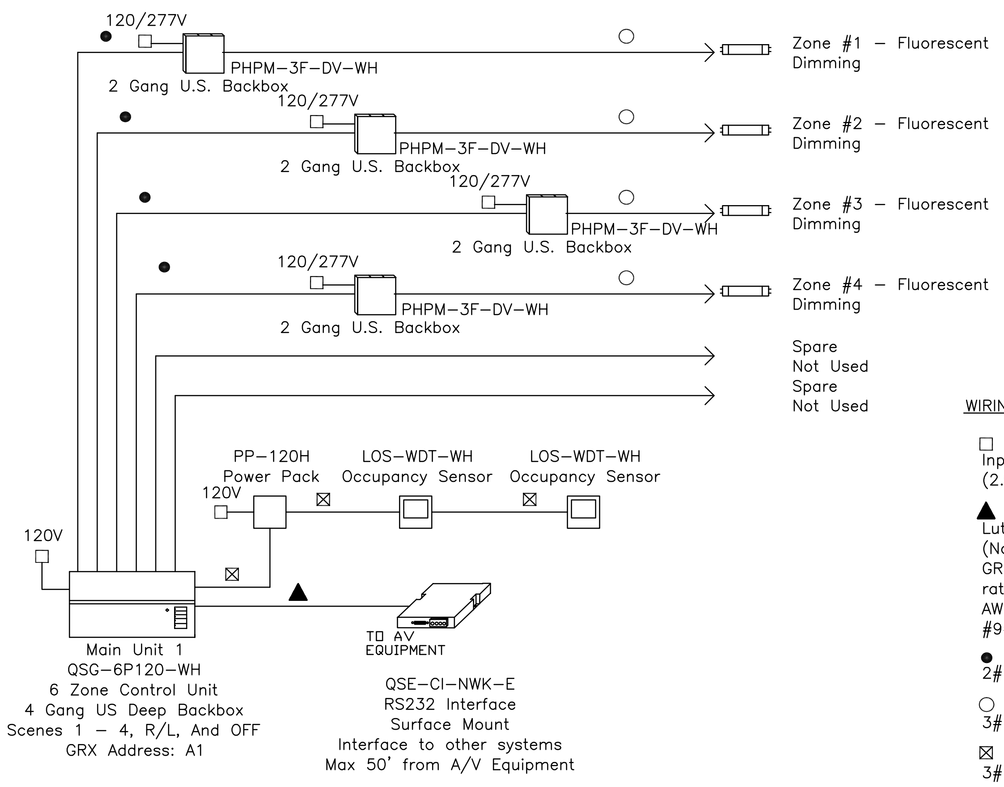

ELECTRICAL CONTRACTOR SHALL PROVIDE A COMPLETE EMT RACEWAY SYSTEM FOR THE LOW VOLTAGE LIGHTING CONTROL WIRING.

WIRING LEGEND:

□ Input Power. Use 2 #12 AWG (2.5mm2).

▲ Lutron cable GRX-CBL-346S (Non-Plenum) or GRX-PCBL-346S (Plenum rated). Otherwise use 2 #18 AWG (1.0mm2) and 1 Belden #9461 (or equivalent).

● 2#12 AWG (2.5mm2)

○ 3#12 AWG (2.5mm2)

⊠ 3#18 AWG (1.0mm2)

3 Typical Conference Room Dimming System Wiring Diagram

SCALE: No Scale

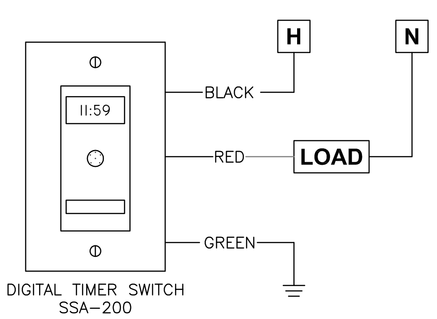

4 Digital Time Switch Wiring Diagram

SCALE: No Scale

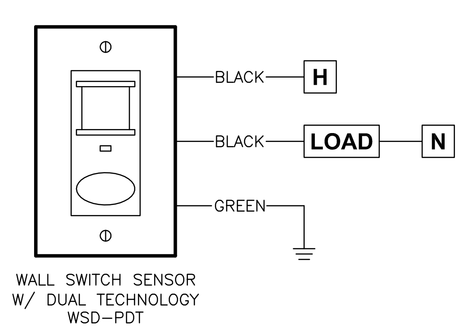

5 1-Pole Occupancy Sensor Wiring Diagram

SCALE: No Scale

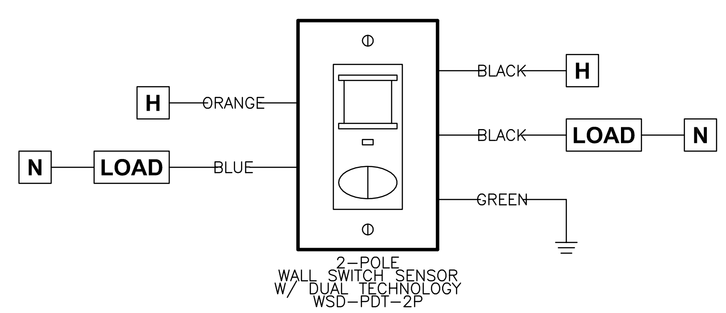

6 2-Pole Occupancy Sensor Wiring Diagram

SCALE: No Scale

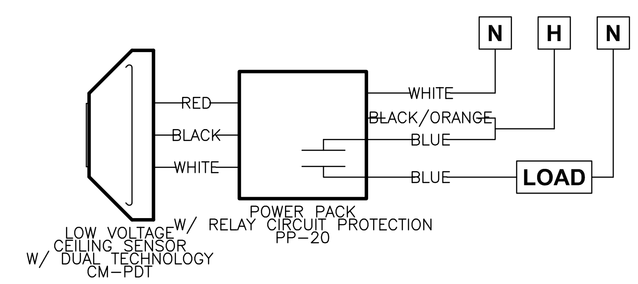

7 Occupancy Sensor Wiring Diagram

SCALE: No Scale

FOR CONSTRUCTION
FULLY STAMPED

Revisions:	Date

CONSULTANTS:

HDR

HDR Architecture, Inc.

1101 King Street | Suite 400 | Alexandria, Virginia 22314-2944 | 703.518.8500

ARCHITECT/ENGINEERS:

ARCHITECTURE
ENGINEERING
INTERIOR DESIGN
DESIGN/BUILD

ASTORINO

227 Fort Pitt Boulevard Pittsburgh Pennsylvania 15222
TEL 412 765 1700 FAX 412 765 1711 www.astorino.com

Drawing Title	Electrical Details
Approved: Project Director	
Project Title	VA CARES CONSOLIDATION VAMC, PITTSBURGH, PA RESEARCH OFFICE BLDG.
Location	VAPHS UNIVERSITY DRIVE
Date	08-18-10
Checked	TMR
Drawn	LLG
Project Number	646CA2500R
Building Number	30
Drawing Number	EP7-108
Dwg. of	

Office of Facilities Management

Department of Veterans Affairs

VA FORM 08-6231, OCT 1978

P:\Project\20054250.00\CAD\UNIVERSITY DRIVE\Research Office Building\Electrical\EP7-104.dwg LGARDNER 10/29/09 10:39:56

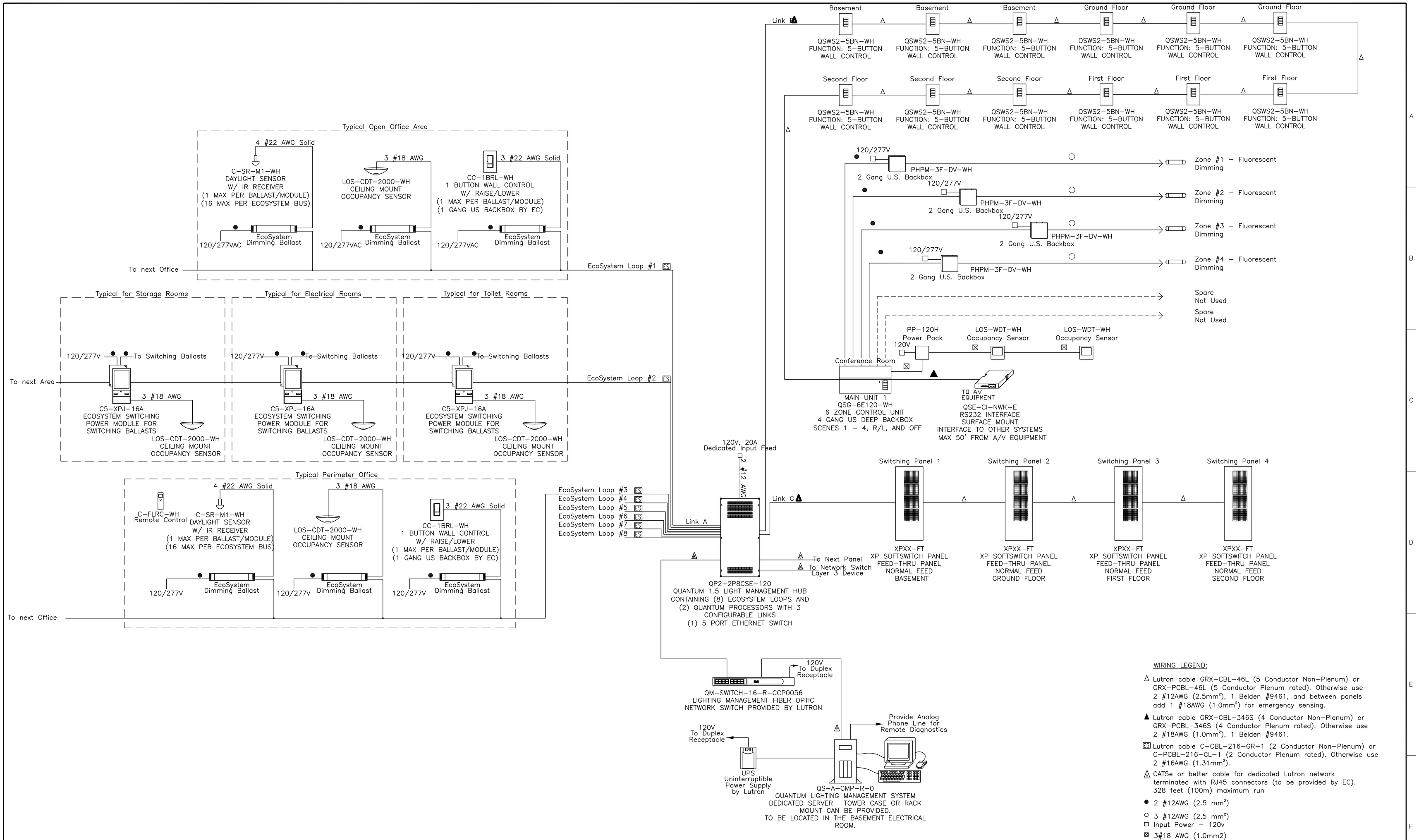

WIRING LEGEND:

- Δ Lutron cable GRX-CBL-46L (5 Conductor Non-Plenum) or GRX-PCBL-46L (5 Conductor Plenum rated). Otherwise use 2 #12AWG (2.5mm²), 1 Belden #9461, and between panels add 1 #18AWG (1.0mm²) for emergency sensing.
- ▲ Lutron cable GRX-CBL-346S (4 Conductor Non-Plenum) or GRX-PCBL-346S (4 Conductor Plenum rated). Otherwise use 2 #18AWG (1.0mm²), 1 Belden #9461.
- ES Lutron cable C-CBL-216-GR-1 (2 Conductor Non-Plenum) or C-PCBL-216-CL-1 (2 Conductor Plenum rated). Otherwise use 2 #16AWG (1.31mm²).
- △ CAT5e or better cable for dedicated Lutron network terminated with RJ45 connectors (to be provided by EC). 328 feet (100m) maximum run
- ● 2 #12AWG (2.5 mm²)
- ○ 3 #12AWG (2.5 mm²)
- □ Input Power - 120v
- ⊠ 3#18 AWG (1.0mm2)

4 Building Lighting Control System Wiring Diagram - Alternate

SCALE: No Scale

FOR CONSTRUCTION
FULLY SPRINKLERED

Revisions:	Date

CONSULTANTS:

HDR Architecture, Inc.
1101 King Street | Suite 400 | Alexandria, Virginia 22314-2944 | 703.518.8500

ARCHITECT/ENGINEERS:

ARCHITECTURE ENGINEERING INTERIOR DESIGN DESIGN/BUILD
ASTORINO
227 Fort Pitt Boulevard Pittsburgh Pennsylvania 15222
TEL 412 765 1700 FAX 412 765 1711 www.astorino.com

Drawing Title: **Electrical Details**

Approved: Project Director

Project Title: **VA CARES CONSOLIDATION VAMC, PITTSBURGH, PA RESEARCH OFFICE BLDG.**

Location: **VAPHS UNIVERSITY DRIVE**

Date: **08-18-10** | Checked: **TMR** | Drawn: **LLG**

Project Number: **646CA2500R**

Building Number: **30**

Drawing Number: **EP7-109**

Dwg. of

Office of Facilities Management

Department of Veterans Affairs

VA FORM 08-6231, OCT 1978

P:\Project\20054225.00\CAD\UNIVERSITY DRIVE\Research Office Building\Electrical\EP7-104.dwg LGARDNER 10/29/09 : 10:39:56