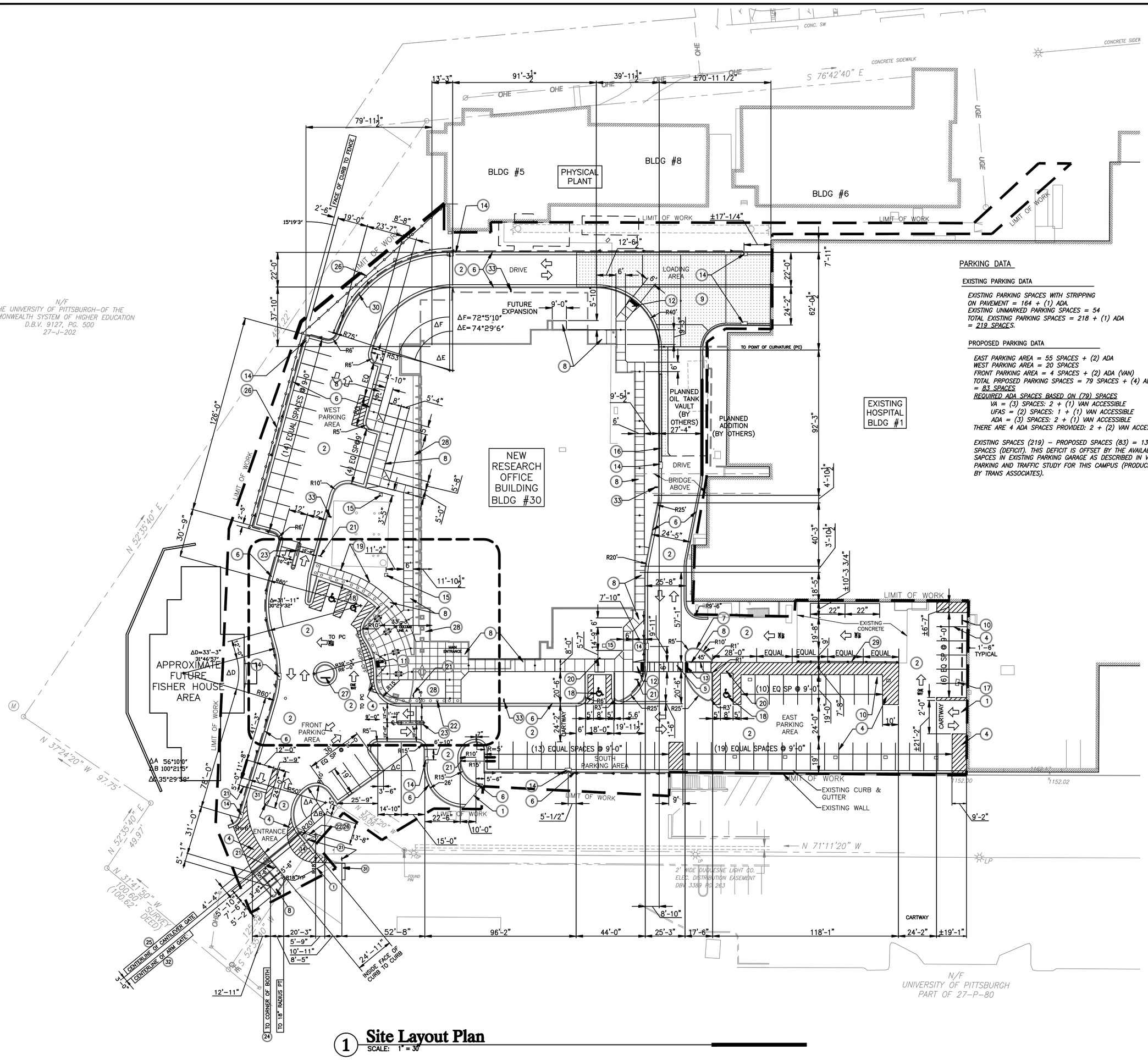

1 Site Layout Plan
SCALE: 1" = 30'

PARKING DATA

EXISTING PARKING DATA

EXISTING PARKING SPACES WITH STRIPPING ON PAVEMENT = 164 + (1) ADA.
EXISTING UNMARKED PARKING SPACES = 54
TOTAL EXISTING PARKING SPACES = 218 + (1) ADA = 219 SPACES.

PROPOSED PARKING DATA

EAST PARKING AREA = 55 SPACES + (2) ADA
WEST PARKING AREA = 20 SPACES
FRONT PARKING AREA = 4 SPACES + (2) ADA (VAN)
TOTAL PRPOSED PARKING SPACES = 79 SPACES + (4) ADA = 83 SPACES
REQUIRED ADA SPACES BASED ON (79) SPACES
VA = (3) SPACES: 2 + (1) VAN ACCESSIBLE
UFAS = (2) SPACES: 1 + (1) VAN ACCESSIBLE
ADA = (3) SPACES: 2 + (1) VAN ACCESSIBLE
THERE ARE 4 ADA SPACES PROVIDED: 2 + (2) VAN ACCESS

EXISTING SPACES (219) – PROPOSED SPACES (83) = 136 SPACES (DEFICIT). THIS DEFICIT IS OFFSET BY THE AVAILABLE SAPCES IN EXISTING PARKING GARAGE AS DESCRIBED IN VA PARKING AND TRAFFIC STUDY FOR THIS CAMPUS (PRODUCED BY TRANS ASSOCIATES).

Site Layout Key Notes

1. SAWCUT, KEY & SEAL ASPHALT PAVEMENT BETWEEN NEW & EXISTING ASPHALT SURFACES
2. ASPHALT PAVEMENT & STONE BASE, SEE DETAIL 4/CS5-900
3. TYPICAL - PAINTED ARROW PAVEMENT MARKING, SEE DETAIL 2/CS5-000
4. TYPICAL - PARKING SPACE STRIPPING 4" WIDE WHITE PAINTED LINES, TYPICAL - HATCHING 4" WIDE 45° DIAGONAL, WHITE PAINTED LINES, 30" ON CENTER
5. CROSSWALK PAVEMENT MARKING - SOLID WIDE RECTANGLES 3'-0" WIDE x6'-0" LENGTH EQUALLY SPACED, 3'-0" APART
6. CONCRETE CURB & GUTTER, SEE DETAIL 7/CS5-900
7. CONCRETE FULL-DEPTH CURB, SEE DETAIL 13/CS5-900
8. TYPICAL - CONCRETE SIDEWALK/PAVEMENT, CONTROL & EXPANSION JOINTS, SEE DETAIL 8/CS5-900
9. HEAVY-DUTY VEHICULAR CONCRETE PAVEMENT, SEE DETAIL 9/CS5-900
10. PRECAST CONCRETE WHEEL STOP, 8" WIDE x 6" HIGH x 6'-0" LENGTH, ANCHOR IN PAVEMENT WITH (2) #4 - 24" GALVANIZED STEEL REBAR
11. FLARED CONCRETE CURB RAMP, SEE DETAIL 6/CS5-900
12. CONCRETE CURB RAMP, SEE DETAIL 6/CS5-900
13. DETECTABLE WARNING PANEL, MATCH SAME ON CURB RAMPS
14. DRAIN INLET, 2'-0"x4'-0", SEE DRAWING CS7-000
15. YARD DRAIN, 2'-0"x2'-0", SEE DRAWING CS7-000
16. ACO POLYMER PRODUCTS, INC. (OR EQUAL MANUFACUTURER) S300 POWER DRAIN PRECAST CONCRETE TRENCH DRAIN SYSTEM WITH (16) PRE-SLOPED 1 METER SECTIONS SK3-1 - SK3-16, WITH HEAVY-DUTY SLOTTED DUCTILE IRON GRATE PROVIDE BOITOM VERTICAL DROP OUTLET. CONNECT TO STORM SYSTEM. SEE CS7-000.
17. EXISITING DRAIN INLETS (9) IN EAST PARKING AREA TO REMAIN
18. TYPICAL-ADA PARKING STALL LAYOUT & COMBINATION CURB WHEEL STOP, SEE DETAIL 10/CS5-900. MINIMUM AISLE WIDTH = 5'-0".
19. ADA 'VAN ACCESSIBLE' PARKING SIGN, SEE DETAIL 3/CS5-900
20. ADA PARKING SIGN, SEE DETAIL 3/CS5-900
21. STOP SIGN, SEE DETAIL 2/CS5-900
22. PRECAST CONCRETE K-4 RATED BOLLARD SYSTEM, SEE DETAIL 5/CS5-900
23. CONCRETE CURBED ISLAND WITH ELECTRIC OPERATED ARM GATES & CARD READERS, SEE DETAIL 12/CS5-900
24. PRE-FABRICATED GUARD BOOTH, SEE SPECIFICATIONS AND ARCHITECTURAL DRAWING AS2-102.
25. CRASH BEAM CANTILEVERED ELECTRICALLY OPERATED SLIDE GATE, SEE DETAIL 1/CS5-900
26. CHAIN LINK FENCE, 8' HEIGHT, VERIFY LENGTH, SEE SPECIFICATIONS
27. POST & PANEL IDENTIFICATION SIGN, SEE SPECIFICATIONS
28. OVERSIZE (4"x8") ORNAMENTAL RIVER STONE OVER NON-WOVEN HEAVY-DUTY WEED BARRIER GEOTEXTILE
29. 60 LF OF PENNDOT GALVANIZED STEEL WEAK POST GUIDERAIL SYSTEM (33" HEIGHT), MOUNT GUIDERAIL TO EXISTING CONCRETE SLAB WITH 11"x11"x3/4" GALVANIZED STEEL BASE PLATES ANCHORED WITH (4) 7/8"x8" GALV. STEEL ANCHOR BOLTS EPOXY SET IN SLAB, W6x9 POSTS SHALL BE WELDED TO BASE PLATES, TERMINATE ENDS OF GUIDERAIL WITH STANDARD FULL RADIUS SECTIONS, MATERIALS AND INSTALLATION SHALL BE IN STRICT CONFORMANCE TO PENNDOT PUBLICATION 408
30. 100 LF OF PENNDOT GALVANIZED STEEL WEAK POST GUIDERAIL SYSTEM (33" HEIGHT) WITH W6x9 POSTS DRIVEN INTO EARTH. TERMINATE ENDS OF GUIDERAIL WITH STANDARD FULL RADIUS SECTIONS, MATERIALS AND INSTALLATION SHALL BE IN STRICT CONFORMANCE TO PENNDOT PUBLICATION 408.
31. 24" WIDE X 10'-6" WHITE PAINTED STOP BAR PAVEMENT MARKING.
32. ELECTRIC OPERATED ARM GATE, CARD READER AND BOLLARDS SAME AS SHOWN ON DETAIL 12-CS5-900. NOTE: BOLLARDS 4'-0" O.C.
33. (2) 12" X 18" ALUMINUM REFLECTIVE REGULATION "FIRE LANE" SIGN MOUNTED ON SAME POST AND HEIGHT AS STOP SIGN. TWO SIGNS WITH COPY FACING BOTH DIRECTIONS.

Legend

TC	- TOP OF CURB
BC	- BOTTOM OF CURB
SS	- SANITARY/COMBINED SEWER
CS	- COMBINED SEWER MH
ST	- STORM
MH	- MANHOLE
TOP	- TOP OF CASTING
INV	- INVERT ELEVATION
WV	- WATER VALVE
GV	- GAS VALVE
FH	- FIRE HYDRANT
BM	- BENCH MARK
PM	- PARKING METER
MB	- MAILBOX
FP	- FLAG POLE
LP	- LIGHT POLE
DLC	- DUQUENSE LIGHT COMPANY
TS	- TRAFFIC SIGNAL
CNO	- COULD NOT OPEN
℞	- PROPERTY LINE
BT	- BELL TELEPHONE
PP	- POWER POLE
TW	- TOP OF WALL @ GRADE
BW	- BOTTOM OF WALL @ GRADE
TG	- TOP OF GRATE
TC	- TERRA COTTA PIPE (WHERE SHOWN NEXT TO SEWER LINE

EXISTING

- EX. PROPERTY LINE
- EX. RIGHT OF WAY LINE
- EX. EASEMENT
- EX. CONTOURS
- EX. GAS LINE
- EX. UNDERGROUND ELECTRIC LINE
- EX. AERIAL ELECTRIC/ TELEPHONE/CABLE TV
- EX. SANITARY SEWER (BY PLAN)
- EX. SANITARY SEWER (FIELD)
- EX. STORM SEWER
- EX. WATERLINE BY PLAN
- EX. FIRE HYDRANT
- EX. FENCE
- EX. BOLLARD/POST
- EX. SIGN
- EX. LIGHT POLE
- EX. UTILITY POLE
- EX. GUY ANCHOR/WIRE
- EX. GAS VALVE
- EX. TREES
- EX. WATER VALVE
- EX. GAS METER
- EX. SPOT ELEVATION
- EX. (TYPE W) INLET
- EX. (TYPE M) INLET
- EX. MANHOLE
- EX. YARD DRAIN
- EX. FLAG POLE
- LIMIT OF WORK LINE
- GUIDERAIL

PROPOSED

- PROPOSED FENCE
- PROPOSED SPOT ELEVATION
- PROPOSED CONTOURS
- PROPOSED INLET
- PROPOSED MANHOLE
- PROPOSED COORDINATE POINT
- PROPOSED UTILITY POLE
- PROPOSED SIGN
- PROPOSED LIGHT POLE
- PROPOSED STORM SEWER
- SIDEWALK CONTROL JOINT
- SIDEWALK EXPANSION JOINT
- BITUMINOUS PAVEMENT
- HEAVY DUTY VEHICULAR CONCRETE PAVEMENT
- CONCRETE CURB & GUTTER
- CONCRETE CURB
- CHAIN LINK FENCE
- PAVEMENT SUBDRAIN
- GUIDERAIL

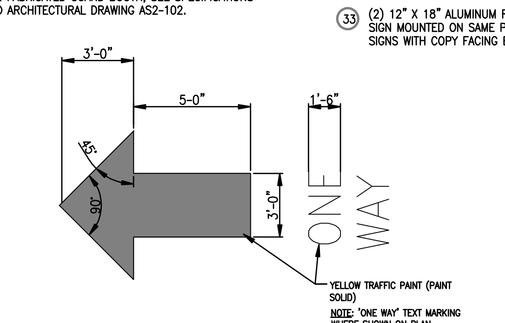

2 Traffic Arrow Pavement Marking
SCALE: NTS

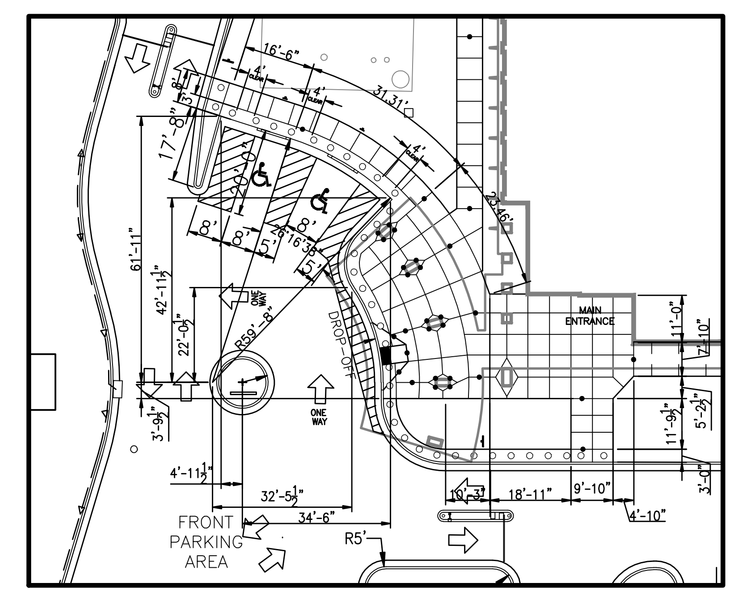

3 Site Layout Plan - Enlargment @ SW Corner
SCALE: 1" = 20'

NOTE: THE UTILITY LOCATIONS SHOWN ON THIS PLAN ARE APPROX. LOCATIONS ONLY AS PER UTILITY COMPANY INFORMATION AND INFORMATION SUPPLIED BY THE PA ONE CALL SYSTEM.

SERIAL # 20102280550
Design:

*BEFORE YOU DIG ANYWHERE IN PENNSYLVANIA STOP! CALL PA. ONE-CALL AT 1-800-242-1776 TOLL FREE FOR ACTUAL FIELD UTILITY LOCATIONS.

PENNSYLVANIA ACT 38 (1991) REQUIRES NO LESS THAN 3 WORKING DAYS NOTICE NOR MORE THAN 10 WORKING DAYS NOTICE FROM EXCAVATORS WHO ARE ABOUT TO DIG, DRILL, BLAST, AUGER, BORE, GRADE, TRENCH, OR DEMOLISH WHEN IN THE CONSTRUCTION PHASE. A DESIGNER IS REQUIRED TO GIVE NO LESS THAN 10 WORKING DAYS NOR MORE THAN 90 WORKING DAYS NOTICE WHEN ENGAGED IN THE DESIGN PHASE. BOTH OF THESE CONDITIONS INVOLVE THE ENTIRE COMMONWEALTH.

BLDG NORTH

30 15 0 30 60
SCALE: 1" = 30'

FOR CONSTRUCTION
FULLY SPRINKLERED

Revisions:	Date

CONSULTANTS:

HDR
HDR Architect-eg, Inc.
1101 King Street | Suite 400 | Alexandria, Virginia 22314-2944 | 703.518.8600

ARCHITECT/ENGINEERS:

ARCHITECTURE ENGINEERING INTERIOR DESIGN DESIGN/BUILD
ASTORINO
223 First Pitt Boulevard Pittsburgh Pennsylvania 15222
TEL 412.765.1700 FAX 412.765.1711 www.astorino.com

Drawing Title	Site Layout Plan
Approved: Project Director	
Project Title	VA CARES CONSOLIDATION VAMC, PITTSBURGH, PA RESEARCH OFFICE BLDG.
Project Number	640CA00028
Building Number	30
Location	VAPHS UNIVERSITY DRIVE
Date	08-18-2010
Checked	MED
Drawn	MED
Drawing Number	CS5-000
Dwg. – of –	

Office of Facilities Management
Department of Veterans Affairs

VA FORM 08-6231, OCT 1978

P:\Project\2005425.00\CAD\UNIVERSITY DRIVE\Research Office Building\Site\CS5-000.dwg MDAMICO 08/16/10 , 10:18:20