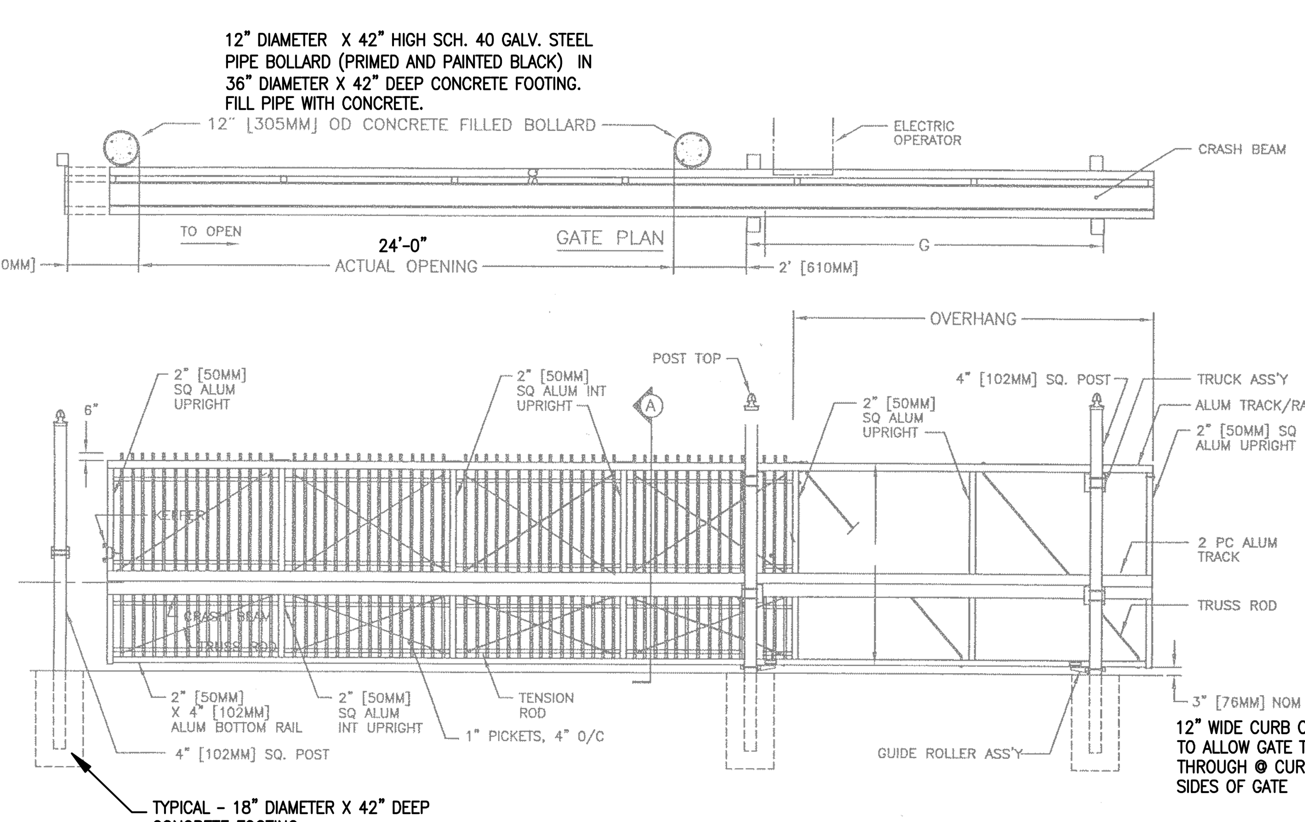

1 Cantilevered Slidie Gate/Vehicle Stop Crash Beam PLAN ELEVATION
SCALE: N.T.S.

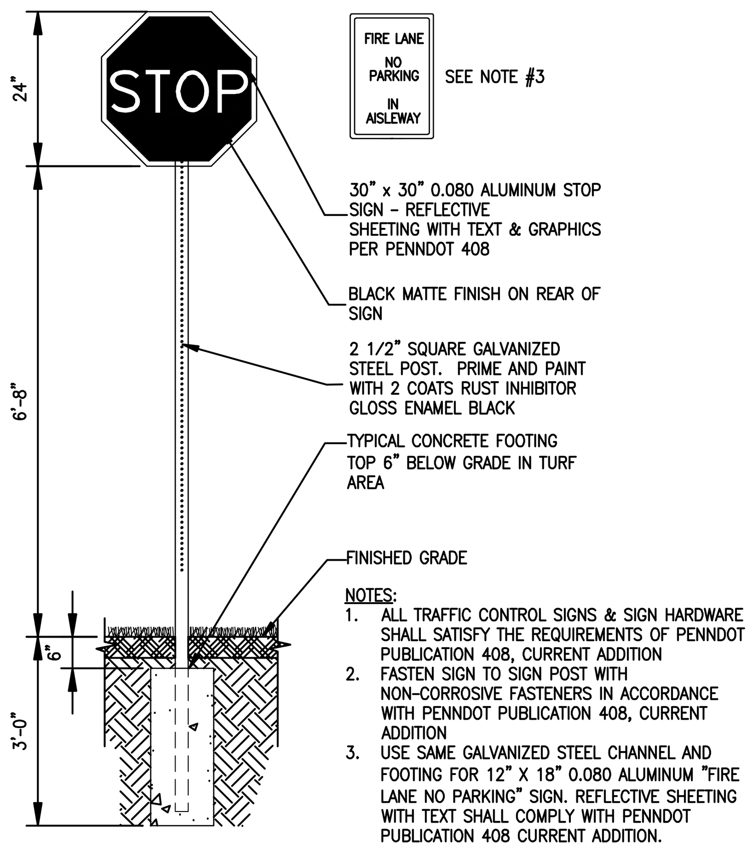

2 Traffic 'Stop Sign' Post ELEVATION
SCALE: N.T.S.

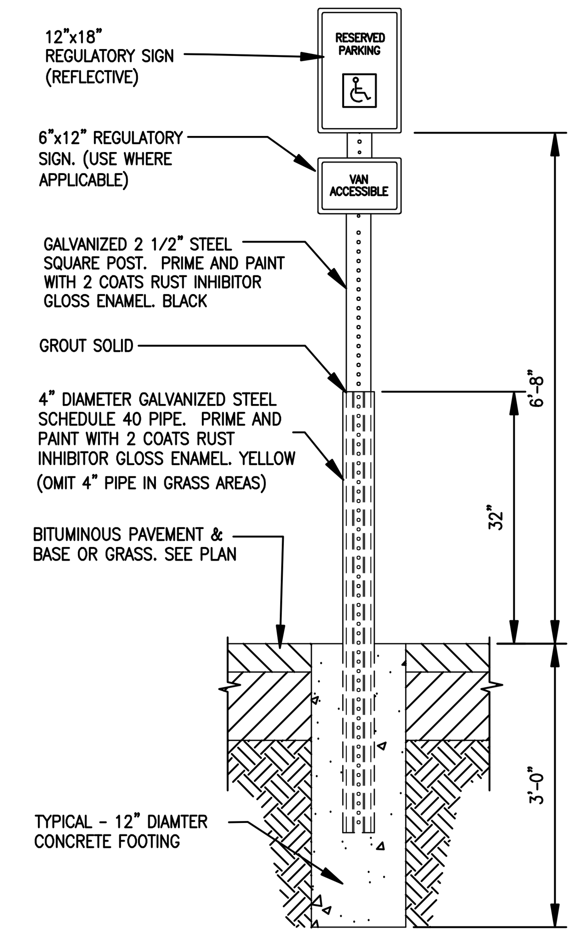

3 ADA Parking Sign ELEVATION
SCALE: N.T.S.

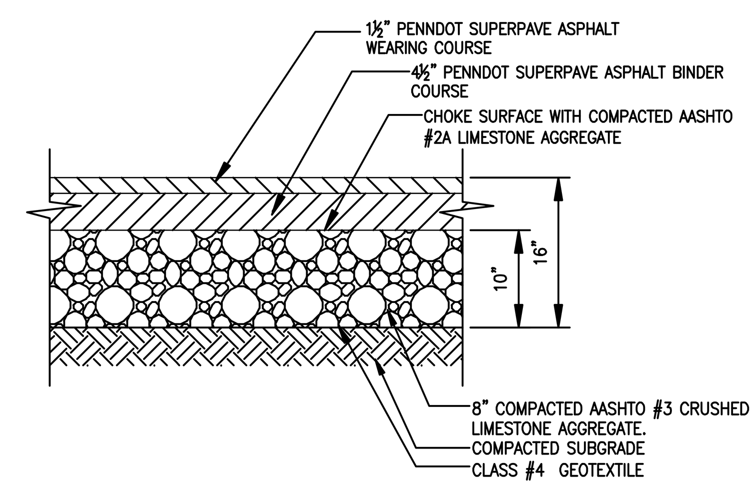

4 Asphalt Pavement SECTION
SCALE: N.T.S.

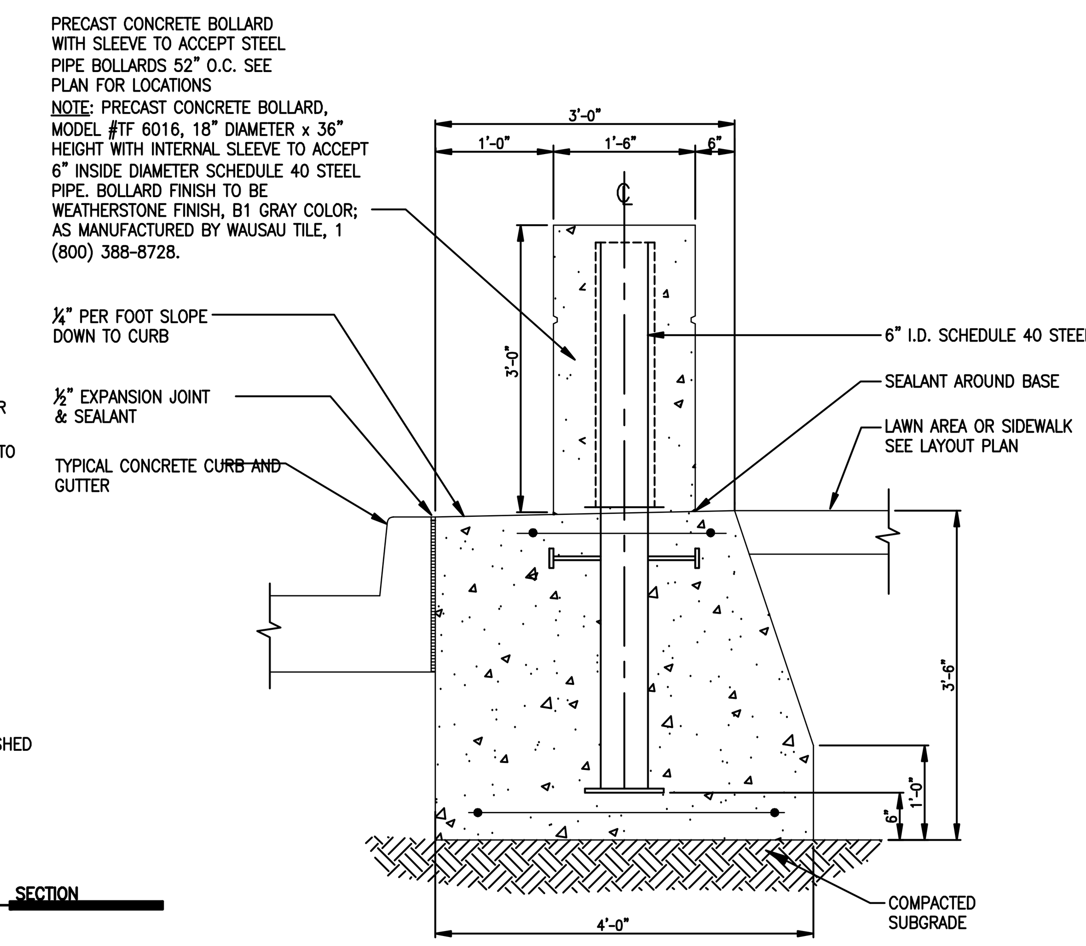

5 Pre-Cast Conc. Bollard (K4 Rating) SECTION
SCALE: NTS

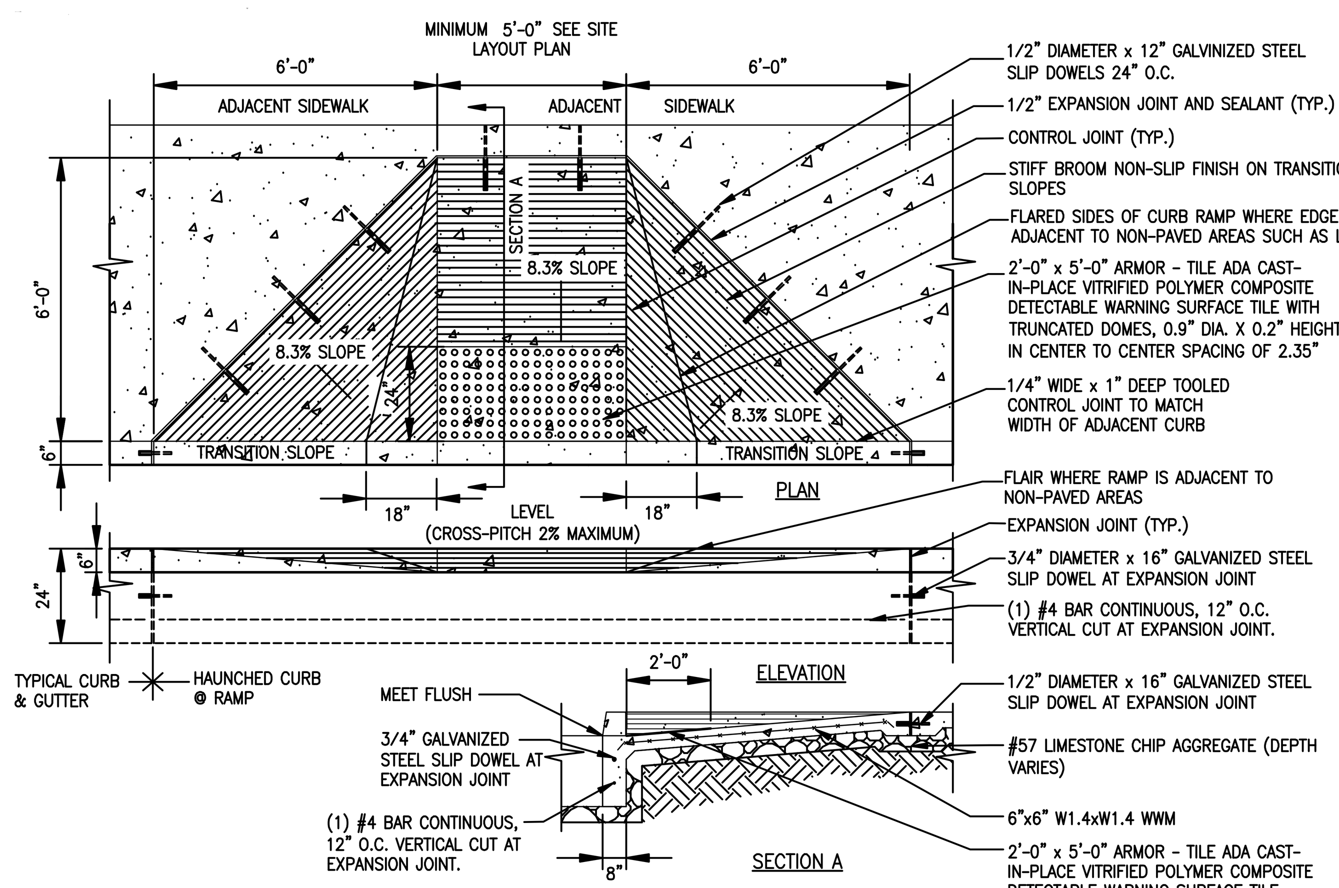

6 Flared Concrete Curb Ramp PLAN ELEVATION SECTION
SCALE: 3/8"=1'-0"

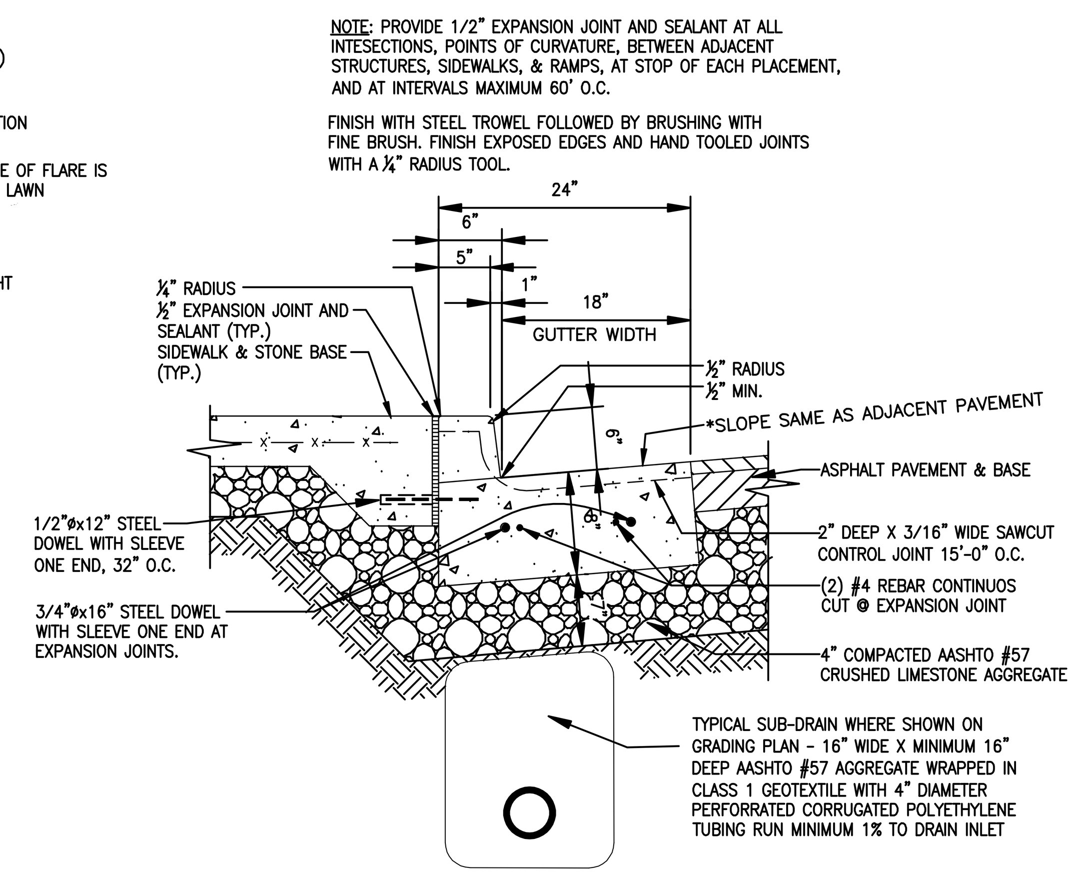

7 Sidewalk at Typ. Concrete Curb/Gutter SECTION
SCALE: N.T.S.

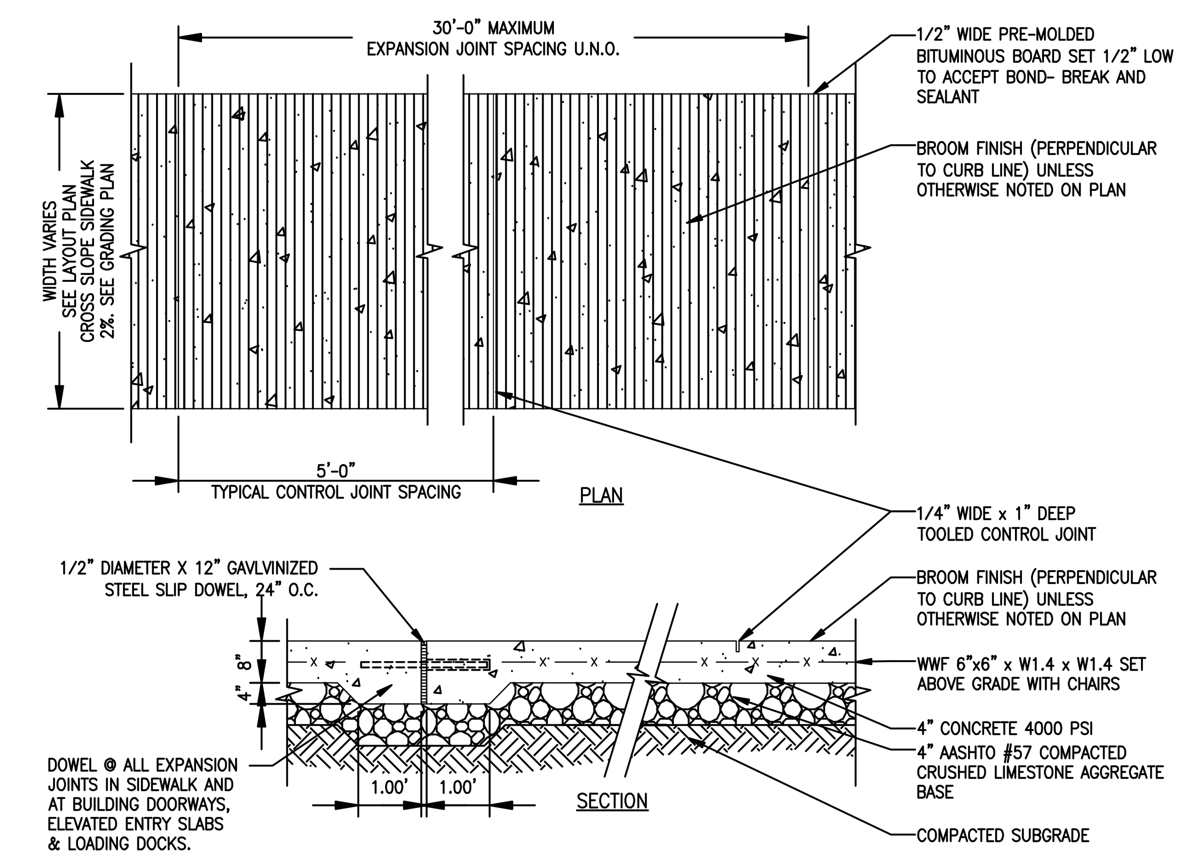

8 Concrete Sidewalk PLAN SECTION
SCALE: 1"=1'-0"

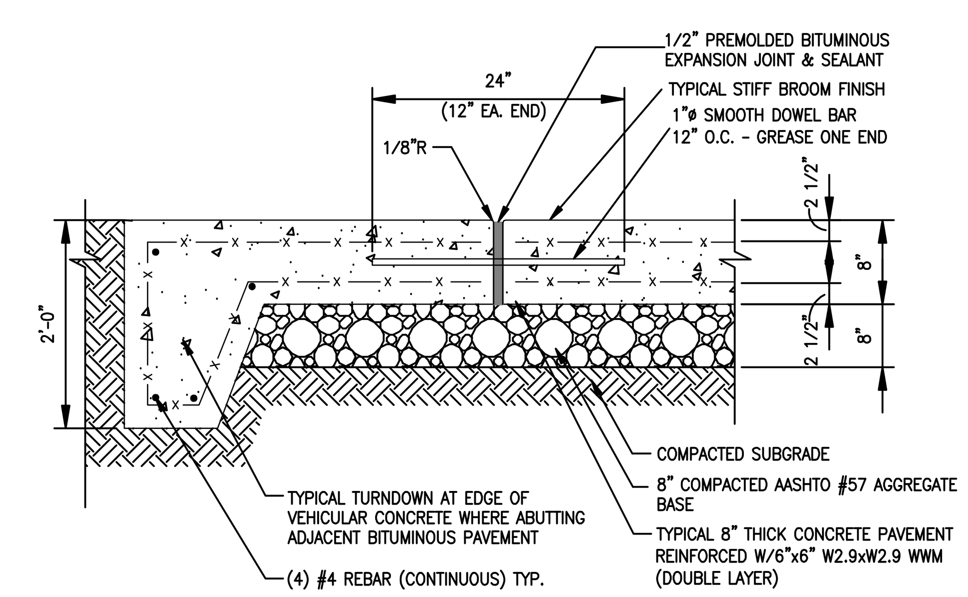

9 Heavy - Duty Conc. Pavement SECTION
SCALE:

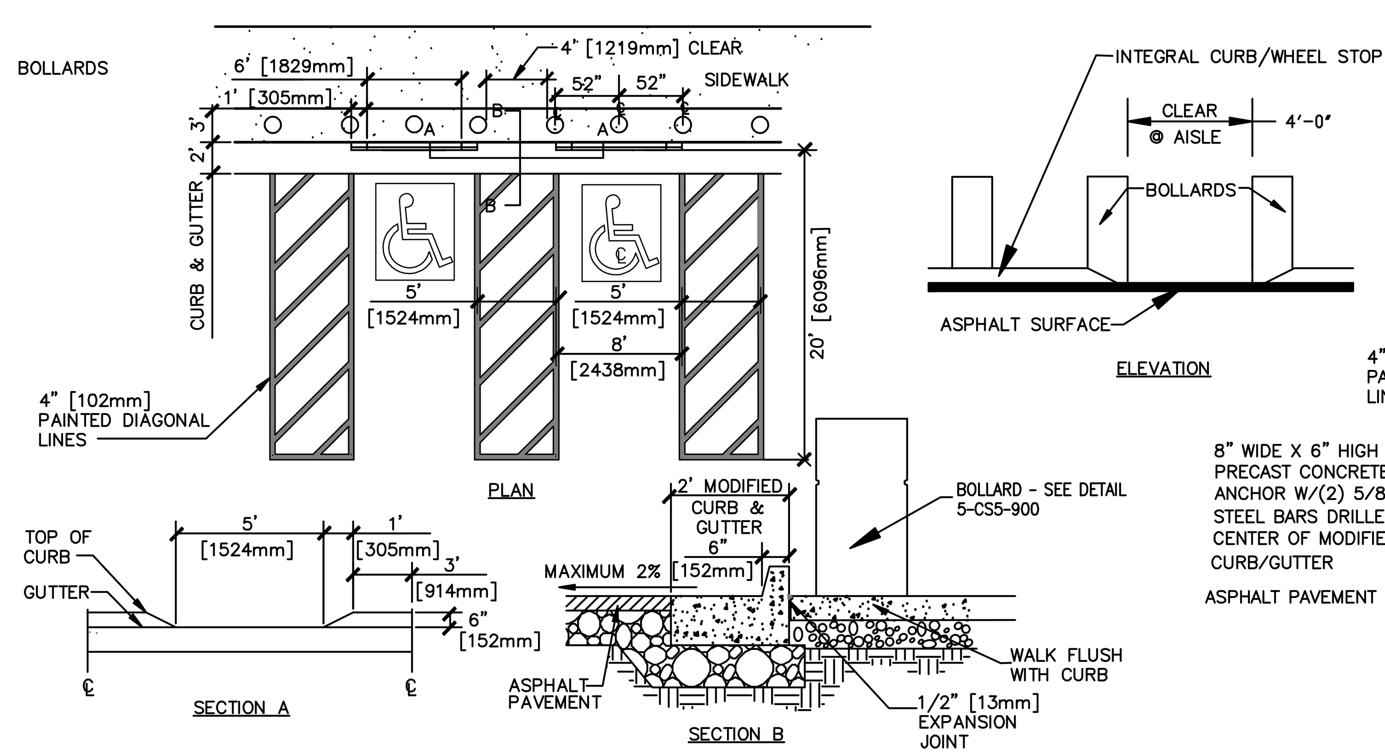

10 Curb-Wheel Stop @ ADA Parking Space Plan
SCALE: N.T.S.

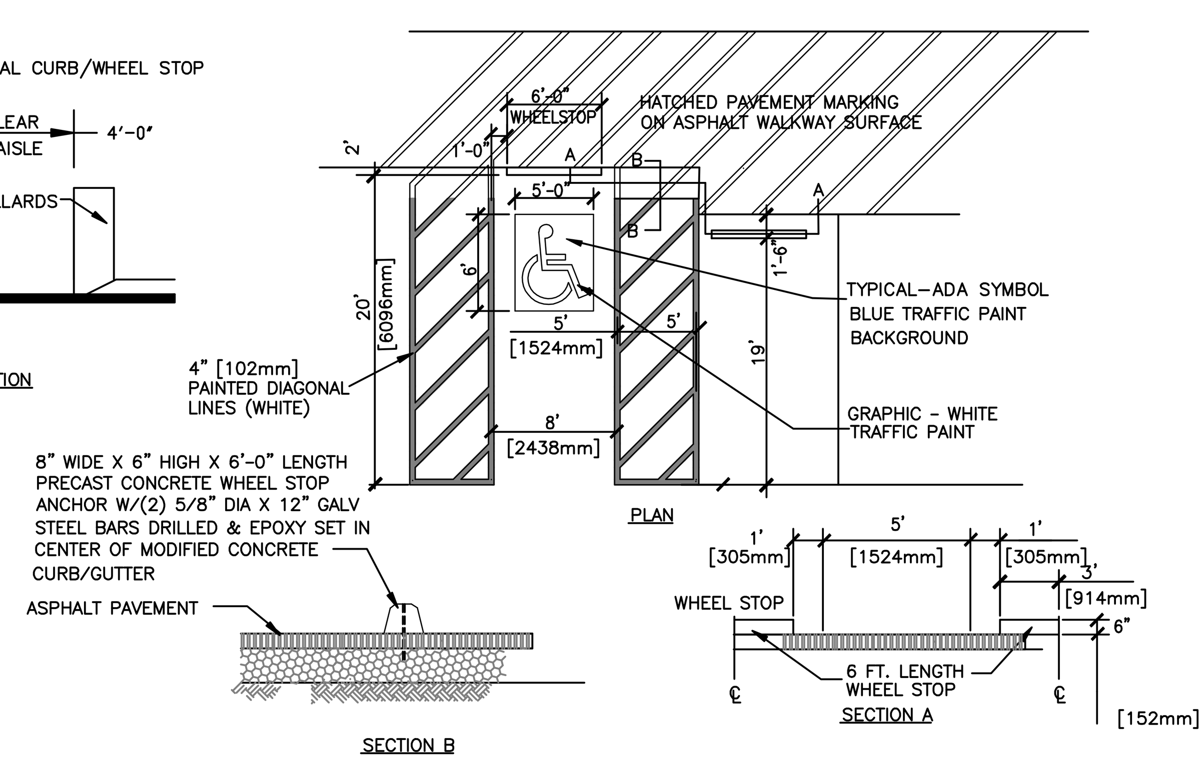

11 Pre-cast Wheel Stop @ ADA Parking Spaces Plan
SCALE: N.T.S.
NO CURB AND GUTTER

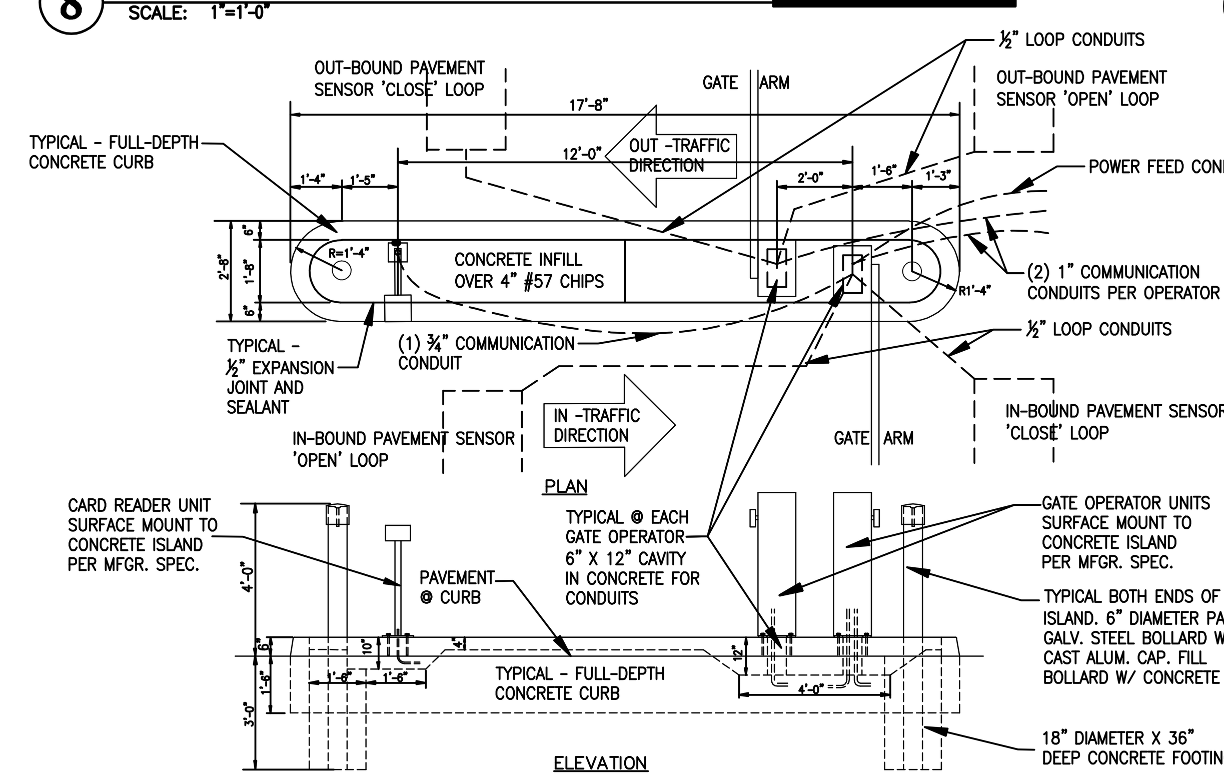

12 Concrete Parking Control Gate Island Plan & Elevation
SCALE: N.T.S.

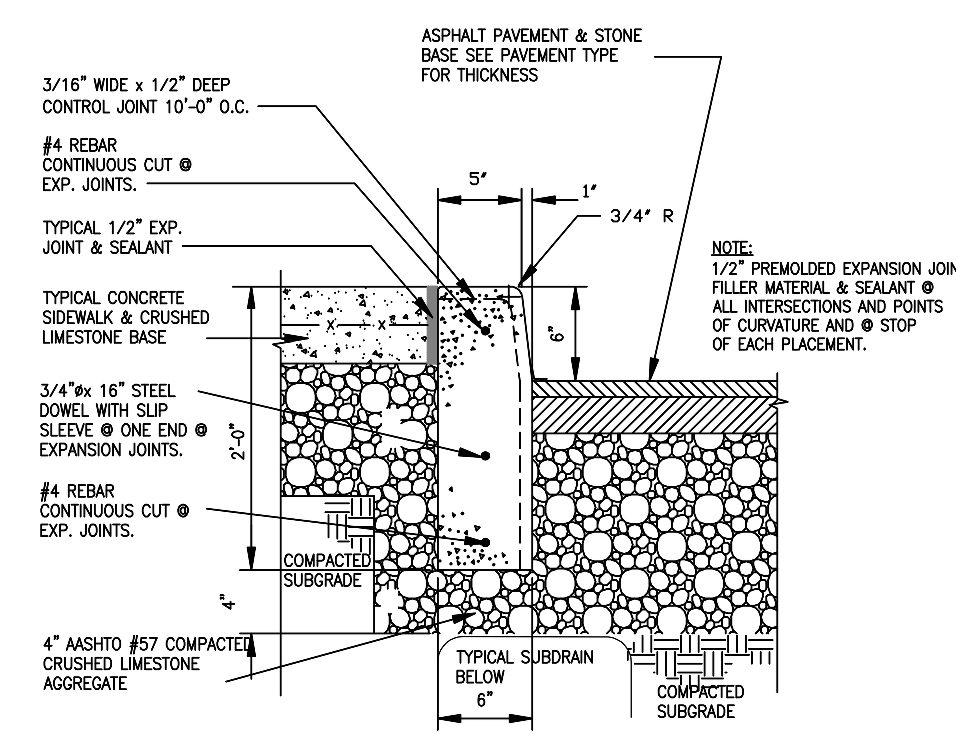

13 Full-Depth Concrete Curb Section
SCALE: N.T.S.

FOR CONSTRUCTION
FULLY SPRINKLERED

Revisions:	Date

CONSULTANTS:

HDR

HDR Architecture, Inc.
1101 King Street | Suite 400 | Alexandria, Virginia 22314-2944 | 703.518.8500

ARCHITECT/ENGINEERS:

ARCHITECTURE
ENGINEERING
INTERIOR DESIGN
DESIGN/BUILD
ASTORINO
227 Fort Pitt Boulevard Pittsburgh Pennsylvania 15222
TEL 412 765 1700 FAX 412 765 1711 www astorino.com

Drawing Title
Site Details

Approved: Project Director

Project Title
VA CARES CONSOLIDATION VAMC, PITTSBURGH, PA RESEARCH OFFICE BLDG.

Location
VAPHS UNIVERSITY DRIVE

Date	Checked	Drawn
08-18-2010	MED	MED

Project Number
646CA6636R

Building Number
30

Drawing Number
CS5-900
Dwg. – of –

Office of Facilities Management
Department of Veterans Affairs

VA FORM 08-6231, OCT 1978

P:\Project\2005425.00\CAD\UNIVERSITY DRIVE\Research Office Building\Site\CS5-900.dwg MDAMICO 08/16/10 ; 10:21:24

three inches = one foot
one and one half inches = one foot
one inch = one foot
three quarters inch = one foot
one half inch = one foot
three eighths inch = one foot
one quarter inch = one foot
one eighth inch = one foot