102.5(7) – The staging of earthmoving activities.

A. Install the Rock Construction Entrance.

B. Mobilize equipment to site. Delineate project boundary limits, clearly mark all pertinent features in the field.

C. Install silt fence at all location identified on the construction drawings. Note: Placement of filter fabric fencing may not be limited to these areas. Silt fencing may be used in combination with seeding/mulching to stabilize areas disturbed by unforeseen construction.

D. Silt fence shall be installed prior to any construction activities. Silt fence shall be installed temporarily along toe of slope adjacent to trenches as required to filter run-off from exposed fill slope.

E. After BMP's are installed and functioning properly, demolition of the construction area may begin.

F. Install storm sewers. Install storm inlet filter bags in each catch basin upon completion.

1. Construction Requirements

a. Limit advance clearing and grubbing operations to a distance equal to two times the length of pipe installation that can be completed in one day.

b. Work crews and equipment for trenching, placement of pipe, plug construction and backfilling will be self contained and separate from clearing and grubbing and site restoration and stabilization operations.

c. Limit daily trench excavation to the length of pipe placement, plug installation and backfilling that can be completed the same day.

d. On the day following pipe placement and trench backfilling, the disturbed area will be graded to final contours and appropriate temporary erosion and sediment pollution control measures/facilities will be installed. Seeding and mulching of all disturbed areas will be done at the end of each week.

2. Exceptions – In certain cases trenches cannot be backfilled until the pipe is hydrostatically tested, or anchors and other permanent features are installed. In these cases, all of the requirements listed under item 2 will remain in effect with the following exceptions:

a. Daily backfilling of the trench may be delayed for six days. All pressure testing and the complete backfilling of the open trench must be completed by the seventh working day.

b. If daily backfilling is delayed, the disturbed area will be graded to final contours, appropriate temporary erosion and sediment control measures/facilities will be installed, and the areas seeded and mulched within the next two calendar days.

G. Rough grade the road and begin excavation on the proposed Research Office Building.

H. Start construction of the building.

I. Fine grade and pave parking area as indicated on plan.

J. Seed all disturbed areas within two work days after work ceases, using seeding requirements. If these areas are not stabilized within the next twenty (20) days, reseed promptly.

K. Upon stabilization (uniform 70% perennial vegetative cover) remove the temporary erosion and sediment pollution control measures, (inlet silt sacks, filter fence, and rock construction entrances.) Seed all disturbed areas within 2 days after work ceases using permanent seeding requirements. If these areas are not stabilized within (20) days, reseed promptly.

L. See Landscape Plan, Drawing LS1-000 for planting requirements.

102.5(10) – A maintenance program which provides for inspection of BMP's on a weekly basis and after each measurable rainfall event, including the repair of BMP's to ensure an efficient operation.

MAINTENANCE SCHEDULE

All erosion and sedimentation control devices will be inspected weekly and after every runoff event. The VA Hospital will be responsible for all maintenance of BMP's. Repairs and maintenance will be performed immediately to maintain the integrity of the measures and facilities. Specific maintenance programs for the filter fabric fence, rock construction entrance, and storm inlet filter bags are described below:

Filter Fabric Fence. The fence installation will be inspected after every precipitation event. Accumulated sediments will be removed when accumulation reach ¼ of the height of the fence. All undercutting or erosion of the toe anchor will be repaired immediately with a rock filter outlet. Manufacturers' recommendation for replacing filter fabric fence due to weathering will be followed. Broken or leaning posts will be reset and guyed if necessary.

Rock Construction Entrance. The structure's thickness will be constantly maintained to the specified dimension by adding rock. A stockpile of rock materials will be maintained on the site for this purpose. At the end of each construction day, sediment deposited on public roadways will be removed and returned to the construction site. Public roadways will not be washed with water.

Storm Inlet Filter Bags. The filter bag will be inspected after every runoff event and on a weekly basis. Accumulated sediments will be removed as required to keep it functional: deposits will be removed when accumulations reach 1/3 of the height of the filter bag.

Seeding. Seed all disturbed areas within two (2) days after reaching final grade using permanent seeding requirements. If these areas are not stabilized within twenty (20) days, reseed promptly. If any areas remains idle for a period of twenty (20) days it must be temporarily stabilized.

Method of Disposal. When cleaning out erosion and sediment pollution control measures, place sediment on topsoil stockpile. Reseed topsoil stockpile immediately with temporary seeding requirements.

102.5(11) – Procedures which ensure that the proper measures for the recycling or disposal of material associated with or from the project side will be undertaken in accordance with Department regulations.

Individuals responsible for earth disturbance activities must ensure that proper mechanisms are in place to control wastewater materials. Construction wastes include, but are not limited to, excess soil materials building materials, concrete wash water, sanitary wastes, etc. that could adversely impact water quality. Measure should be planned and implemented for housekeeping, materials' management, and litter control. The Contractor is responsible to recycle waste materials, where feasible. The Contractor is required to get approval by Allegheny County Conservation District for any offsite waste/borrow area in the event it becomes necessary.

Rock Construction Entrance

General: Rock construction will be built at all locations where the contractor will access the construction site from any paved road, public or private. Contractor will utilize the rock construction whenever any vehicle leaves an unimproved area onto a paved road.

Design Standards:

a. Rock construction entrances will be constructed to the minimum width and thickness dimensions as shown in detail.
b. Rock will be AASHTO No.1 as specified in Section 703.2 of the PA DOT Publication 408.
c. For installation on clayey or poorly drained soils, a geotextile fabric underlayment of a type recommended for such applications by the manufacturer, will be used.

Maintenance:

The structure's thickness will be constantly maintained to the specified dimensions by adding rock. A stockpile of rock material will be maintained on the site for this purpose. At the end of each construction day, all sediment deposited on the roadways will be removed and returned to the construction site. Washing the roadway with water is not permitted.

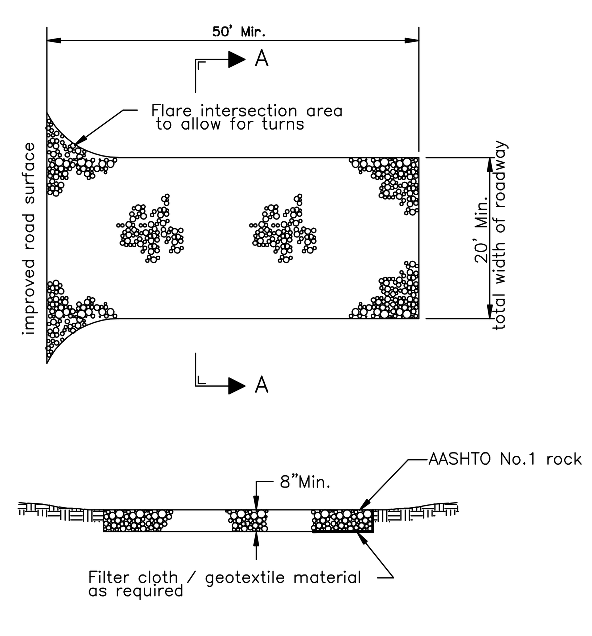

Rock Construction Entrance Detail
N.T.S.

STANDARD CONSTRUCTION DETAIL #28a
Filter Bag Inlet Protection
Channel or Roadside Swale

Storm Inlet Filter Bag

Maintenance:

Storm Inlet Filter Bags shall be inspected weekly and after every runoff event. Any torn or damaged bag shall be replaced by end of work day. Filter Bags shall be emptied when 1/3 full, with the debris properly disposed of by the contractor at the Contractor's dump site.

* Use Low Flow Filter Bags

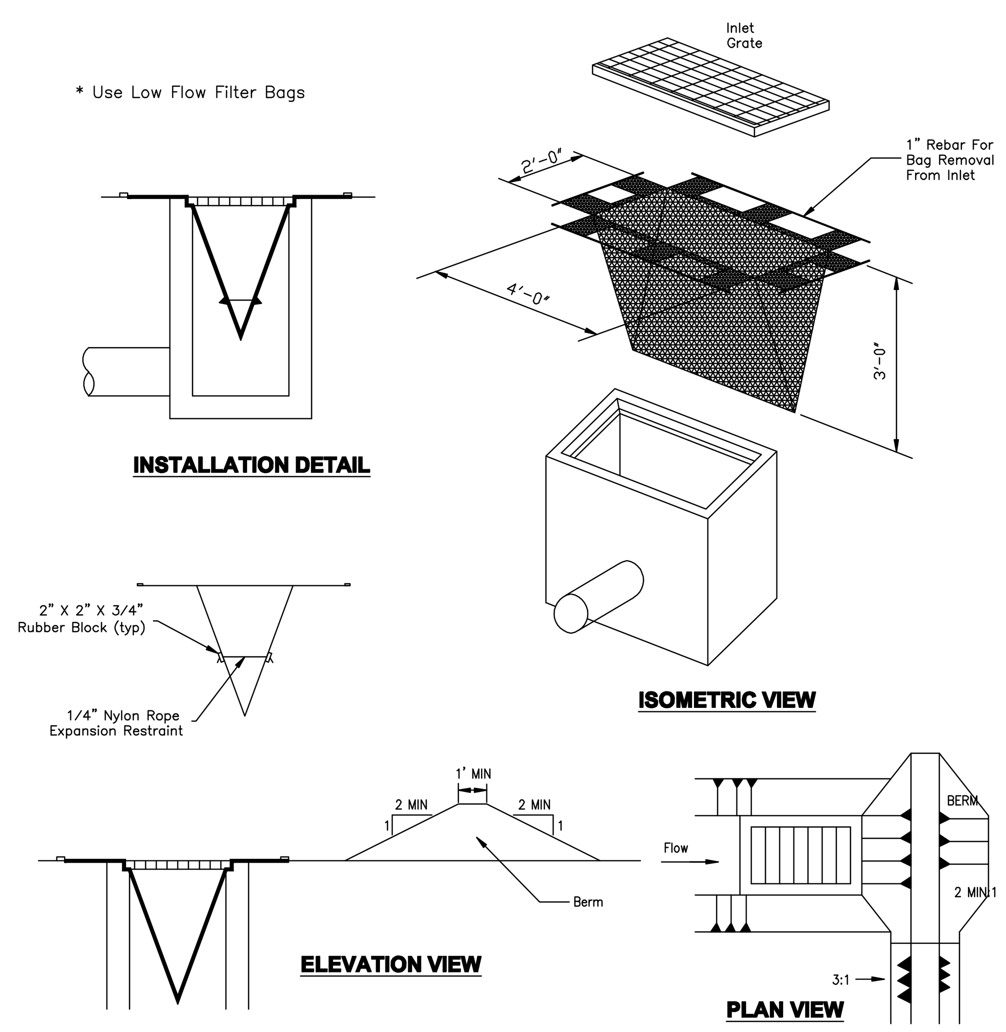

Maximum Drainage Area = 1/2 acre.

Inlet protection is not required for inlet tributary to sediment basin or trap. Berms required for all installations.

Earthen berm in roadway shall be maintained until roadway is stoned. Road subbase berm on roadway shall be maintained until roadway is paved. Earthen berm in channel shall be maintained until permanent stabilization is completed or to remain permanently.

DO NOT USE ON MAJOR PAVED ROADWAYS WHERE PONDING MAY CAUSE TRAFFIC HAZARDS

Method Of Placing Cut & Fill To Minimize Soil Erosion
NTS

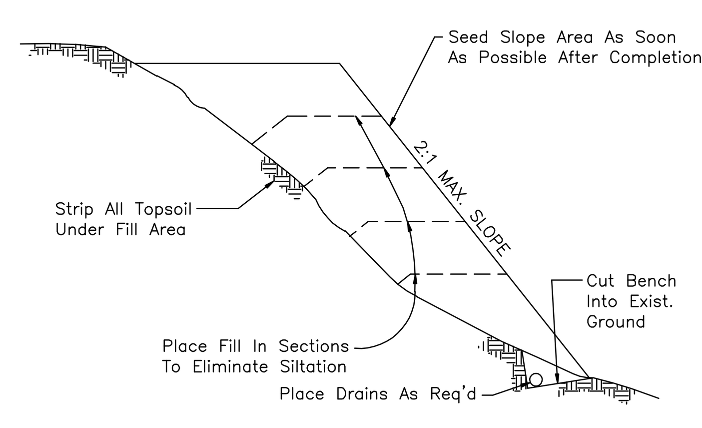

FILL AREA

Note: Seeding In disturbed areas shall be In accordance with permanent seeding requirements.

Note: Fill slopes shall be seeded and mulched in 10' increments

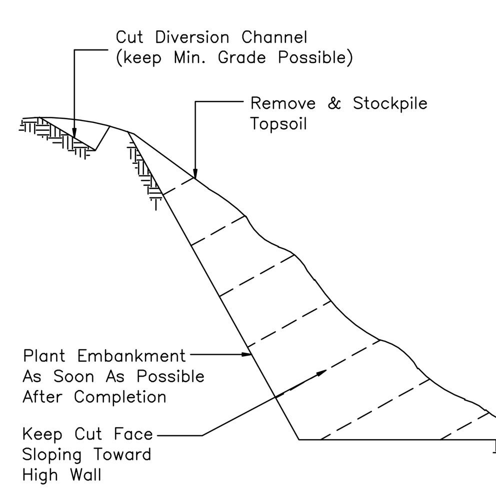

CUT AREA

Silt Fence

Design Standards/Restrictions:

a. Silt Fence will be placed at level grade. Both ends of a fence section will be extended up the slope so that the bottom of the fence shall end at the top of the fence elevation.

b. Silt fences will be designed to control runoff from drainage areas that do not exceed the maximum slope to slope length relationship as shown in TABLE C.

c. 18" high fence shall be installed according to the STANDARD SILT FENCE DETAILS. Any fence greater than 18" high, may be installed according to the details shown, as long as the maximum slope lengths for 18" high fence are observed.

d. 30" high fence, or any fence installed on uncompacted fills or extremely loose undisturbed soils, will be constructed according to the SILT FENCE DETAILS.

e. The formation of concentrated flows on the drainage slope above a silt fence installation is not permitted. If concentrated flows do occur, direct slope stabilization measures must be employed to prevent such conditions.

f. Silt fences will not be placed in any area of concentrated flows such as ditches, swales, channels, etc..

g. Silt fences will not be used in areas where rock or rocky soils prevent full and uniform anchoring of the fence toe.

h. Silt fence material will not be placed across the entrance to pipes or culverts and will not be wrapped around the principal spillway structures of sediment traps or basins.

Installation:

a. A trench will be plowed or otherwise excavated to the required depth (see STANDARD SILT FENCE DETAILS) with little, if any disturbance to the downslope side of the trench. The bottom of the trench and the fence top will be placed on a level grade. When it is necessary to cross small depressions, the trench bottom and fence top edge may deviate slightly from the level grade. Grades in such sections will not exceed one percent (1%), nor will the deviation extend for more than 25 feet.

b. Support stakes will be driven to the required depth below the existing ground at specified intervals.

c. Stretch and fasten fabric to the upslope side of the support stakes (if a reinforced section, fasten reinforcement mesh prior to fastening the fabric).

d. Where ends of the fabric come together, they will be overlapped, folded and stapled to prevent sediment bypass.

e. The toe anchor will be backfilled and compacted to a density equal to the surrounding soils.

f. If constructing a reinforced section, attach guy wires to support stakes. Provisions should be made for easy loosening and removal of the guy wires to allow for access to perform maintenance work.

Maintenance:

a. The fence installation should be inspected after every precipitation event. Any necessary repairs will be made by end of work day.

b. Accumulated sediments will be removed as required to keep the fence functional. In all cases remove deposits where accumulations reach 1/2 the above ground height of the fence.

c. All undercutting or erosion of the toe anchor will be repaired by end of work day with compacted backfill materials.

d. Adhere to any manufacturer's recommendations for replacing silt fence due to weathering.

TABLE C Maximum Slope Lengths for Filter Fabric Fences

Slope – Percent	Maximum Slope Length (ft) Above Fences	
	18" High Fence	30" High Fence
2 (or less)	150	500
5	100	250
10	50	150
15	35	100
20	25	70
25	20	55
30	15	45
35	15	40
40	15	35
45	10	30
50	10	25

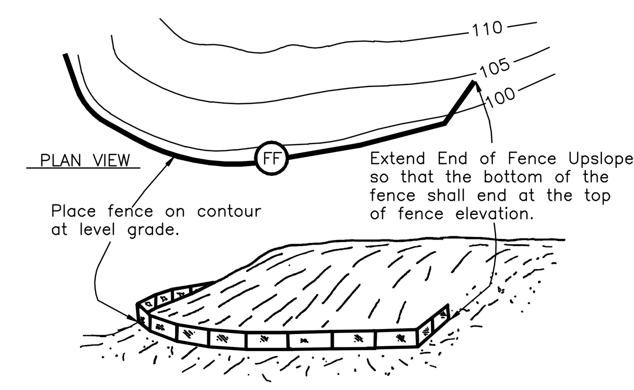

Illustration Filter Fabric Fence Detail
N.T.S.

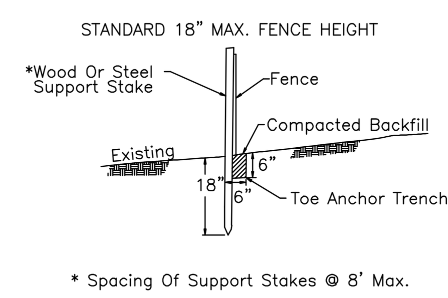

* Spacing Of Support Stakes @ 8' Max.

Standard 18" Silt Fence Detail
N.T.S.

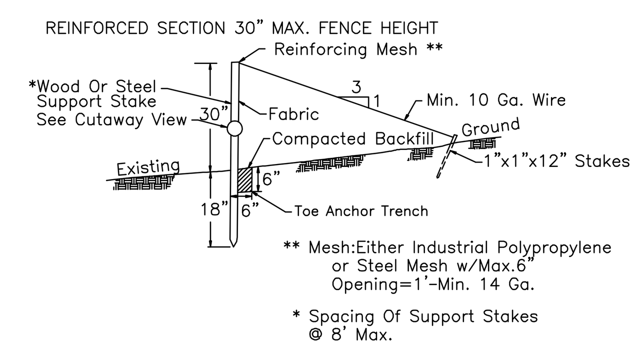

** Mesh:Either Industrial Polypropylene or Steel Mesh w/Max.6" Opening=1'-Min. 14 Ga.

* Spacing Of Support Stakes @ 8' Max.

Standard 30" Silt Fence Detail
N.T.S.

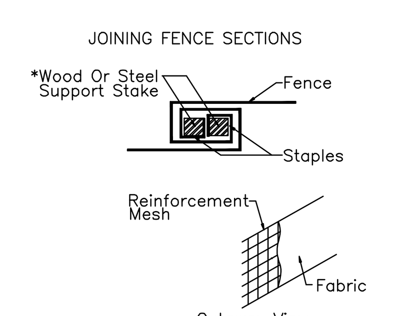

* 2"x 2" Stake is Actual Size not Nominal

SPECIFICATIONS: The Department recommends the use of the Penn State publication "Erosion Control; & Conservation Plantings on Noncropland" as the standard to use for the selection of species, seed specifications, mixtures, liming and fertilizing, time of seeding, and seeding methods. Specifications for these items may also be obtained from Penn DOT's Publication #408, Section 804 or by contacting the applicable county conservation district. Upon selection of a reference, That reference must be used to provide all specifications for seeding, mulching, and soil amendments. The following Specification will be used for this project:

INTERIM SURFACE STABILIZATION

To replace temporary or permanent seeding requirements during non-growing seasons of the year.

MULCH: Hay or Straw – Place uniformly, in a continuous blanket, at a minimum rate of 1,200 pounds per 1,000 square yards.

MULCH BINDER: Cut-back Asphalt – Uniformly not less than 31 gallons per 1,000 square yards.

Materials, Construction and Maintenance shall be in accordance with the specifications contained in Section 805, Penndot Publication 408.

TEMPORARY SEEDING REQUIREMENTS

All exposed areas of soil disturbed by rough grading (not to be fine-graded for periods from 30 days to one year) shall be seeded with the seed mix and at the rate noted below:

SPECIES: Annual Rye
% PURE LIVE SEED: 80%
APPLICATION RATE: 40 lbs/acre
FERTILIZER TYPE: 10-20-20
FERTILIZER APPL. RATE: 1000 lbs/acre
LIMING RATE: 6 tons per acre
MULCH TYPE: Hay or Straw
MULCHING RATE: 3 tons per acre

All seed shall be blue tag certified grade. Seedings made in fall or winter shall be mulched. Straw mulch shall be spread at the rate of 3 tons/acre or wood cellulose fiber mulch shall be applied at the rate of 1,500 lbs/acre.

PERMANENT SEEDING REQUIREMENTS

All exposed areas of soil disturbed by "rough grading" shall be seeded in accordance with Drawing LS1-000 amd Specifications.

STEEP SLOPE SEEDING REQUIREMENTS

SLOPES OVER 33%

All exposed slopes shall be seeded with the seed mix and at the rate noted below:

SPECIES: Birdsfoot Trefoil 80%
Kentucky 31 Tall Fescue
Redtop 20%
% PURE LIVE SEED: 80%
APPLICATION RATE: 35-10-3 lbs/acre
FERTILIZER TYPE: 10-20-20
FERTILIZER APPL. RATE: 1000 lbs/acre
LIMING RATE: 6 tons per acre
MULCH TYPE: Hay or Straw
MULCHING RATE: 3 tons per acre
ANCHOR MATERIAL: Cut-Back Asphalt
RATE OF ANCHOR MATERIAL APPL.: 31 Gal./1000 S.Y.
SEEDING SEASON DATES: Dec. 1

All seed shall be blue tag certified grade. Straw mulch shall be spread at the rate of 3 tons/Acre or wood cellulose fiber mulch shall be applied at the rate of 1200 lbs/Acre.

FOR CONSTRUCTION
FULLY SPRINKLERED

Revisions:	Date

CONSULTANTS:

HDR

HDR Architecture, Inc.

1101 King Street | Suite 400 | Alexandria, Virginia 22314-2944 | 703.518.8500

PREPARED BY
KAG ENGINEERING, INC.
2704 BROWNSVILLE ROAD
PITTSBURGH, PA 15227

ARCHITECT/ENGINEERS:

ARCHITECTURE
ENGINEERING
INTERIOR DESIGN
DESIGN/BUILD

ASTORINO

227 Fort Pitt Boulevard Pittsburgh Pennsylvania 15222
TEL 412 765 1700 FAX 412 765 1711 www astorino.com

Drawing Title
Site Erosion & Sedimentation Control Details

Approved: Project Director

Project Title
VA CARES CONSOLIDATION VAMC, PITTSBURGH, PA RESEARCH OFFICE BLDG.

Location
VAPHS UNIVERSITY DRIVE

Date	Checked	Drawn
08-18-2010	KAG	KAG

Project Number
[illegible]

Building Number
30

Drawing Number
CS6-900

Dwg. – of –

Office of Facilities Management

Department of Veterans Affairs

VA FORM 08-6231, OCT 1978

three inches = one foot
one and one half inches = one foot
one inch = one foot
three quarters inch = one foot
one half inch = one foot
three eighths inch = one foot
one quarter inch = one foot
one eighth inch = one foot

P:\Project\2005425.00\CAD\UNIVERSITY DRIVE\Research Office Building\Site\CS6-900.dwg MDAMICO 08/16/10 ; 10:32:01