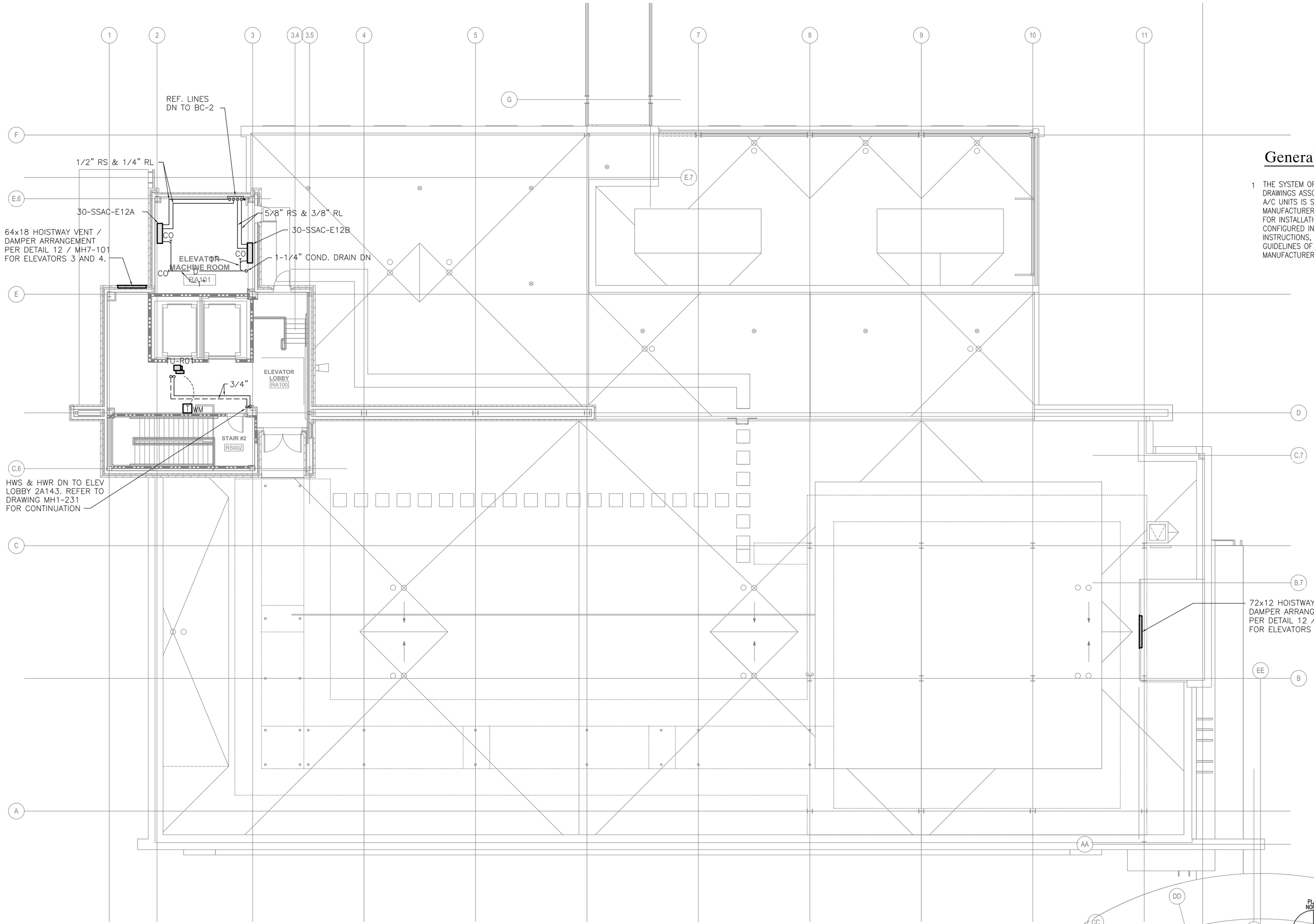

1 Roof Plan - HVAC Piping
SCALE: 1/8"=1'-0"

General Notes:

1 THE SYSTEM OF PIPING SHOWN ON THESE DRAWINGS ASSOCIATED WITH THE SPLIT SYSTEM A/C UNITS IS SPECIFIC TO THE BASIS OF DESIGN MANUFACTURER. THE PIPING SYSTEM REQUIRED FOR INSTALLATION SHALL BE SIZED AND CONFIGURED IN ACCORDANCE WITH INSTRUCTIONS, RECOMMENDATIONS, AND GUIDELINES OF THE SELECTED SYSTEM MANUFACTURER.

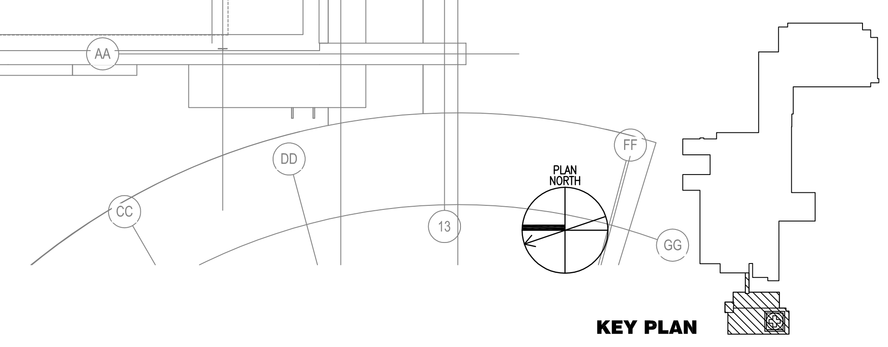

FOR CONSTRUCTION
FULLY SPRINKLERED

Revisions:	Date

CONSULTANTS:

HDR Architecture, Inc.
1101 King Street | Suite 400 | Alexandria, Virginia 22314-2944 | 703.518.8500

ARCHITECT/ENGINEERS:

ARCHITECTURE ENGINEERING INTERIOR DESIGN DESIGN/BUILD
ASTORINO
227 Fort Pitt Boulevard Pittsburgh Pennsylvania 15222
TEL 412.765.1700 FAX 412.765.1711 www.astorino.com

Drawing Title: **Roof Plan HVAC Piping**

Approved: Project Director

Project Title: **VA CARES CONSOLIDATION VAMC, PITTSBURGH, PA RESEARCH OFFICE BLDG.**

Location: **VAPHS UNIVERSITY DRIVE**

Date: **08-18-10** | Checked: **JS** | Drawn: **RAN**

Project Number: **646CA2500R**

Building Number: **30**

Drawing Number: **MH1-241**
Dwg. -- of --

Office of Facilities Management
Department of Veterans Affairs

VA FORM 08-6231, OCT 1978

P:\Project\20050425.00\CAD\UNIVERSITY DRIVE\Research Office Building\HVAC\MH1-241.dwg MBESHENICH 11/05/09 - 13:31:4