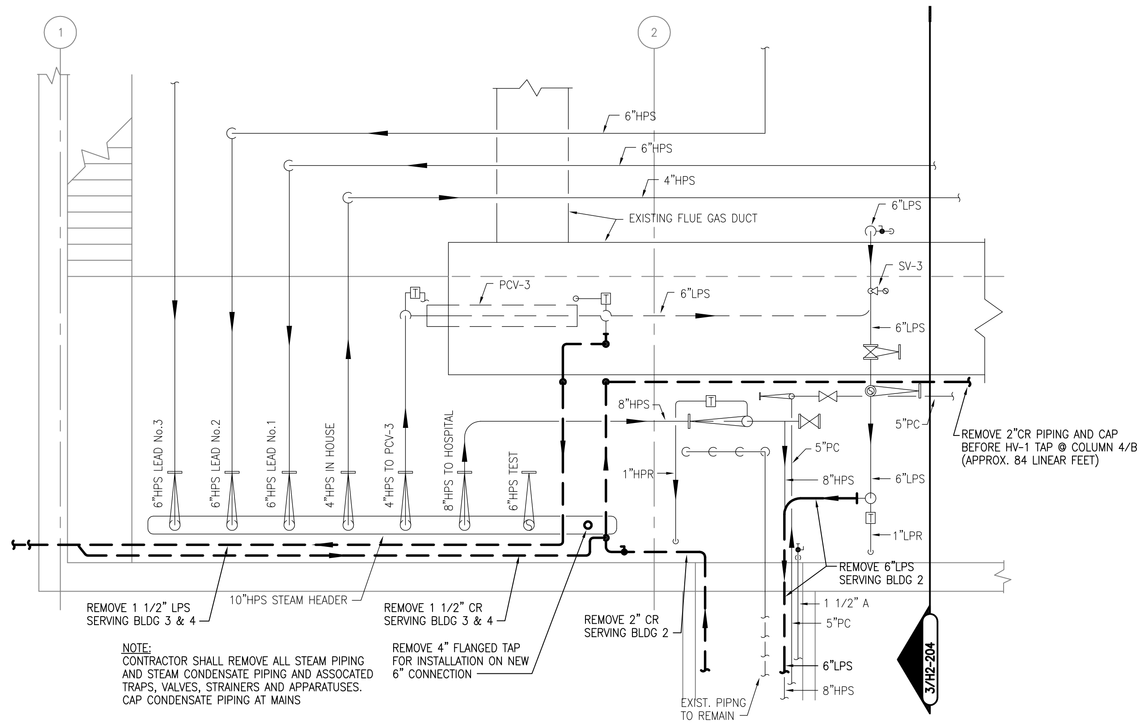

1 Partial Boiler Plant Platform Level - Demolition Plan — Building 5
SCALE: 1/4"=1'-0"

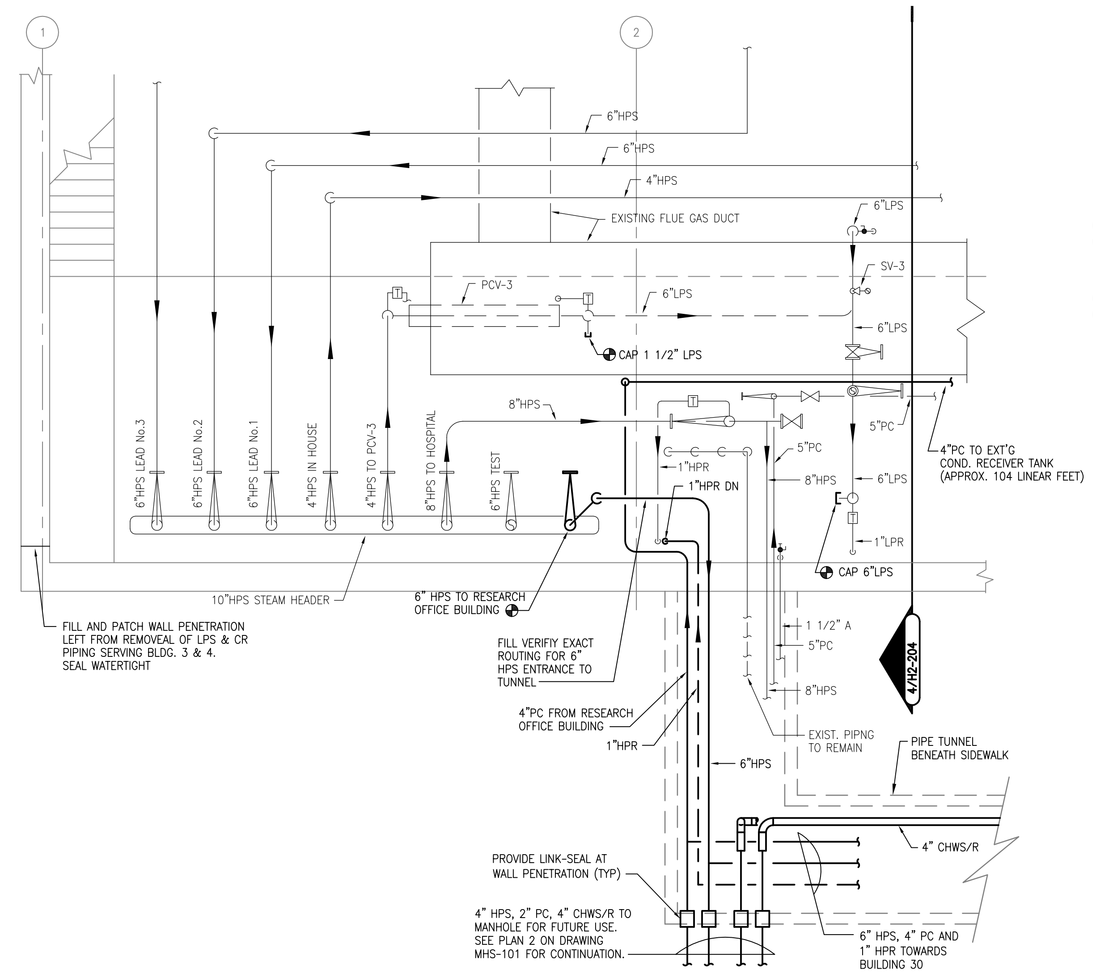

2 Partial Boiler Plant Platform Level - New Work Plan — Building 5
SCALE: 1/4"=1'-0"

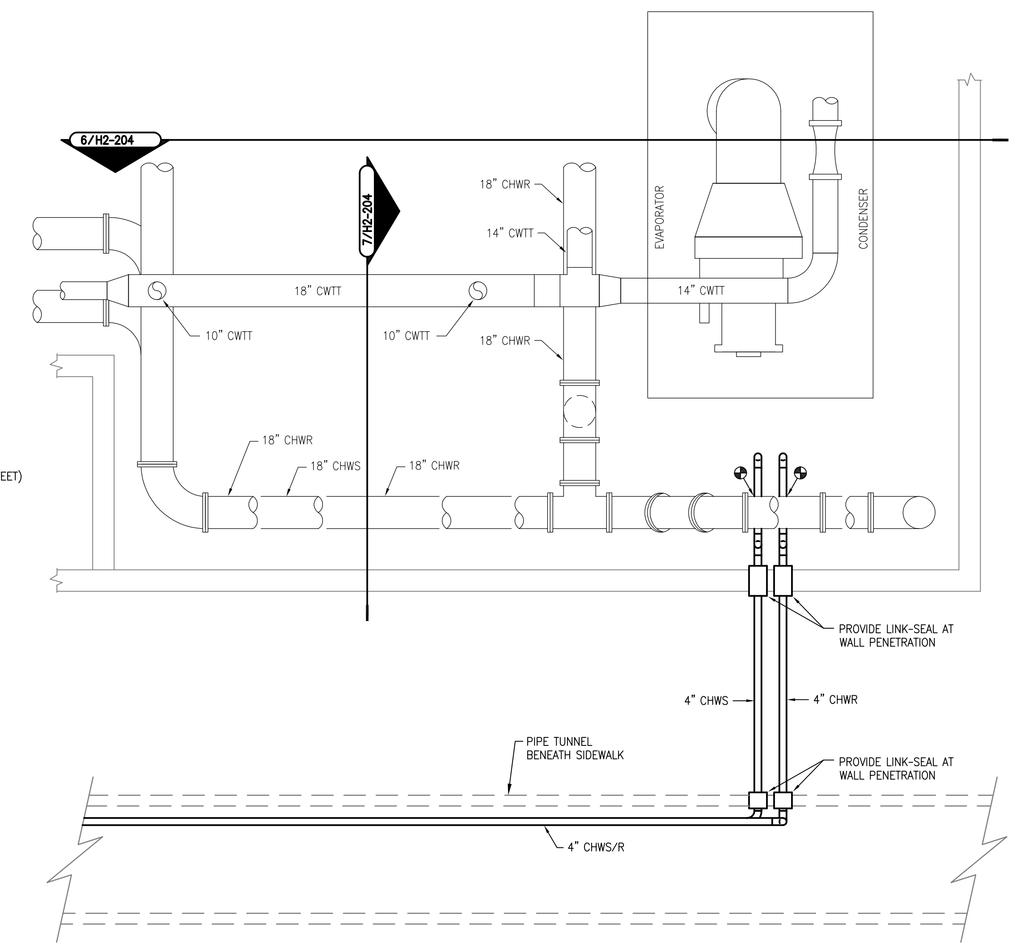

5 Partial Chiller Plant - New Work Plan — Building 8
SCALE: 1/4"=1'-0"

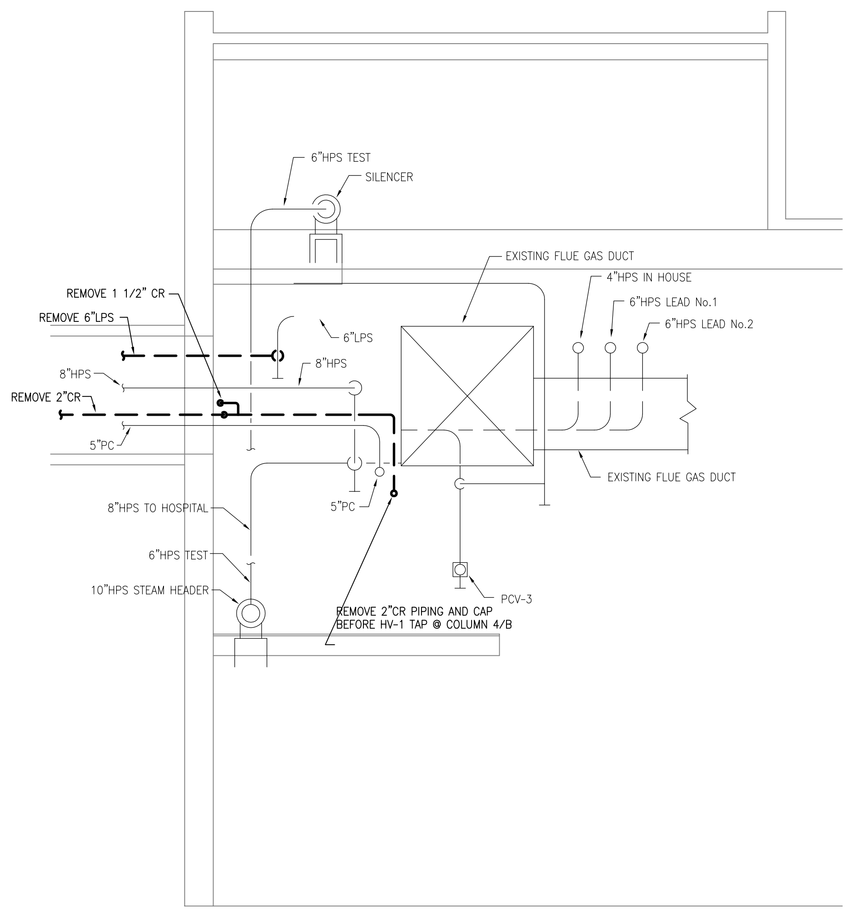

3 Section - Demolition — Building 5
SCALE: 1/4"=1'-0"

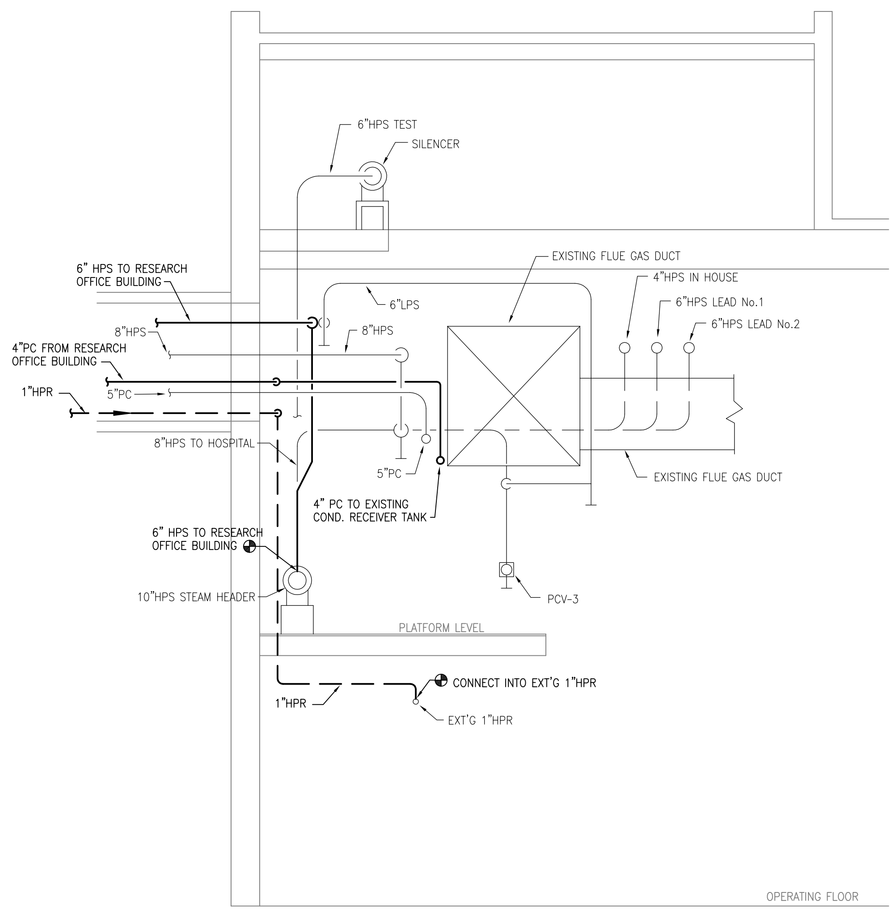

4 Section - New Work — Building 5
SCALE: 1/4"=1'-0"

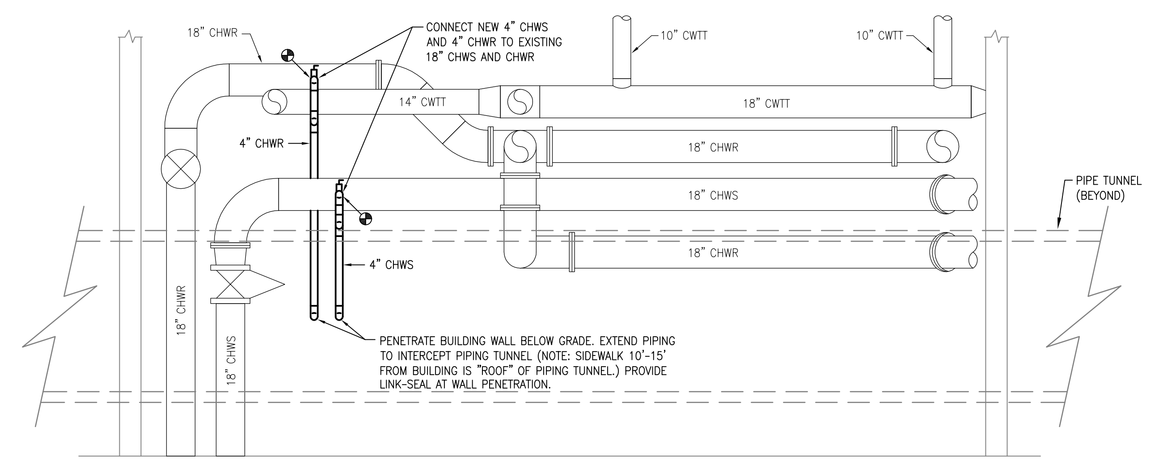

6 Section - New Work — Building 8
SCALE: 1/4"=1'-0"

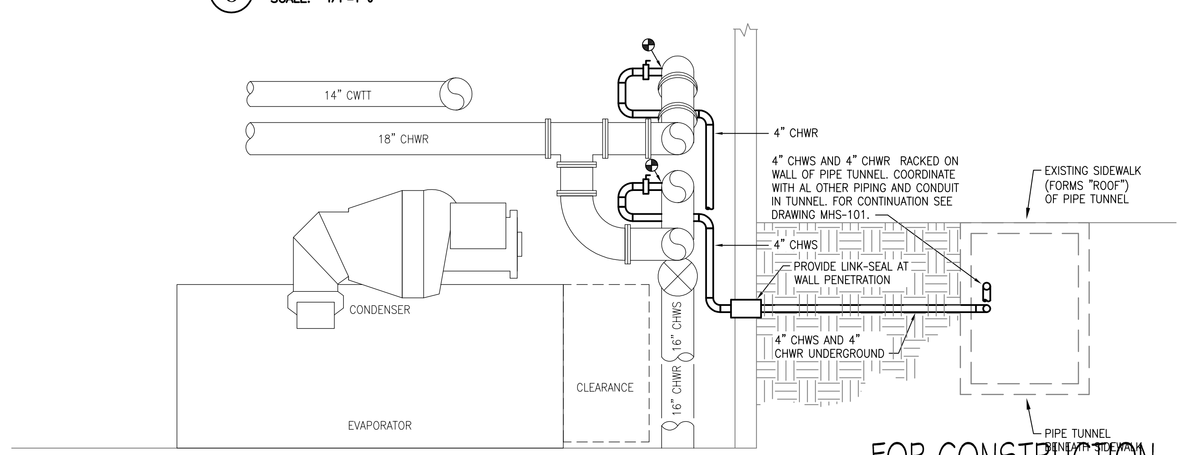

7 Section - New Work — Building 8
SCALE: 1/4"=1'-0"

FOR CONSTRUCTION
FULLY SPRINKLERED

Revisions:	Date

CONSULTANTS:

HDR Architecture, Inc.
1101 King Street | Suite 400 | Alexandria, Virginia 22314-2944 | 703.518.8500

ARCHITECT/ENGINEERS:

ARCHITECTURE ENGINEERING INTERIOR DESIGN DESIGN/BUILD
ASTORINO
227 Fort Pitt Boulevard Pittsburgh Pennsylvania 15222
TEL 412 765 1700 FAX 412 765 1711 www.astorino.com

Drawing Title: **Partial Enlarged Piping Plans - Boiler and Chiller Plants**

Approved: Project Director

Project Title: **VA CARES CONSOLIDATION VAMC, PITTSBURGH, PA RESEARCH OFFICE BLDG.**

Location: **VAPHS UNIVERSITY DRIVE**

Date: **08-18-10** | Checked: **JS** | Drawn: **RAN**

Project Number: **646CA2500R**

Building Number: **30**

Drawing Number: **MH2-204**
Dwg: -- of --

Office of Facilities Management
Department of Veterans Affairs

VA FORM 08-6231, OCT 1978

P:\Project\2005425.00\CAD\UNIVERSITY DRIVE\Research Office Building\HVAC\MH2-204.dwg JS480 08/05/10 - 10:27:15