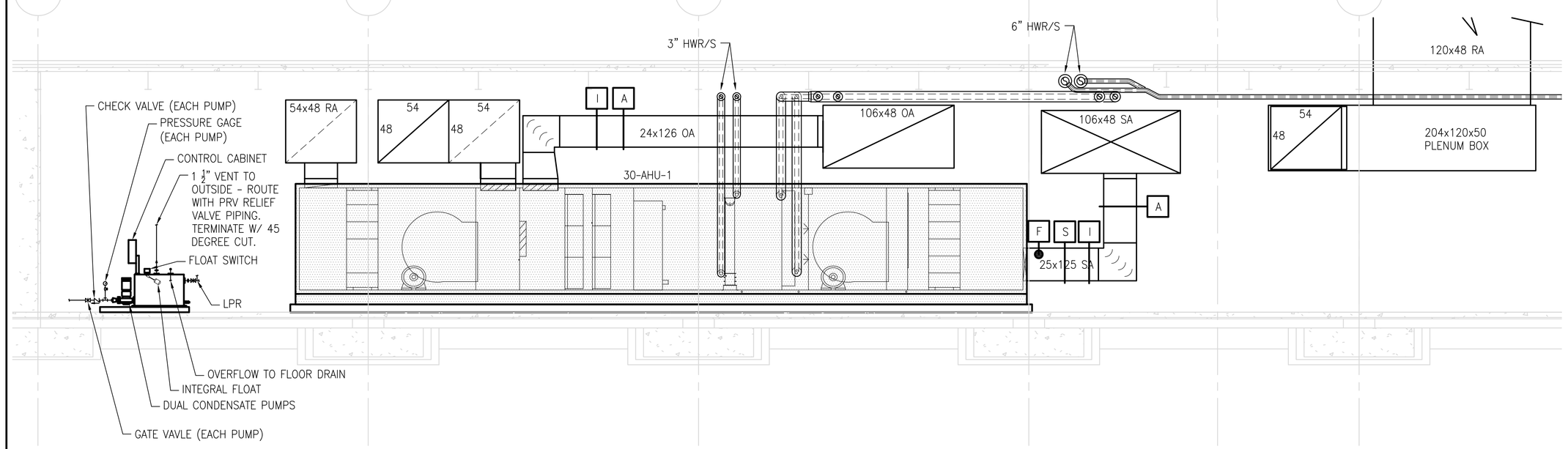

1 HVAC Section
SCALE: 1/4"=1'-0"

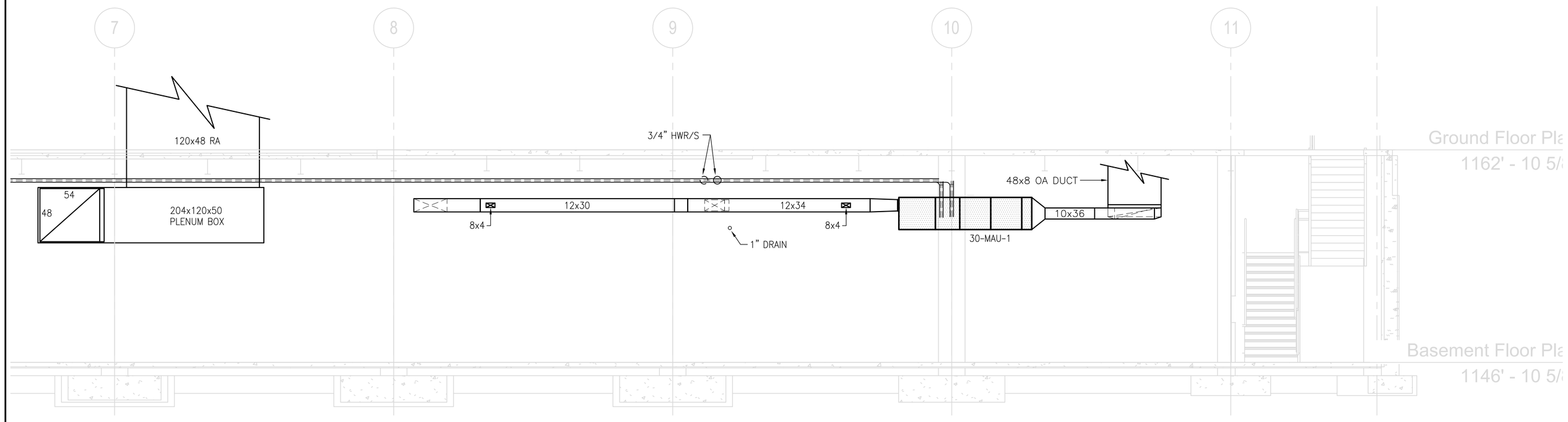

2 HVAC Section
SCALE: 1/4"=1'-0"

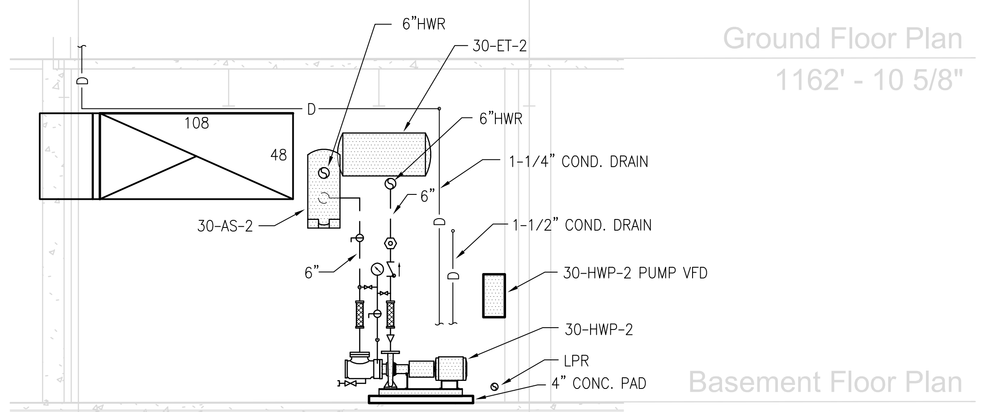

3 HVAC Section
SCALE: 1/4"=1'-0"

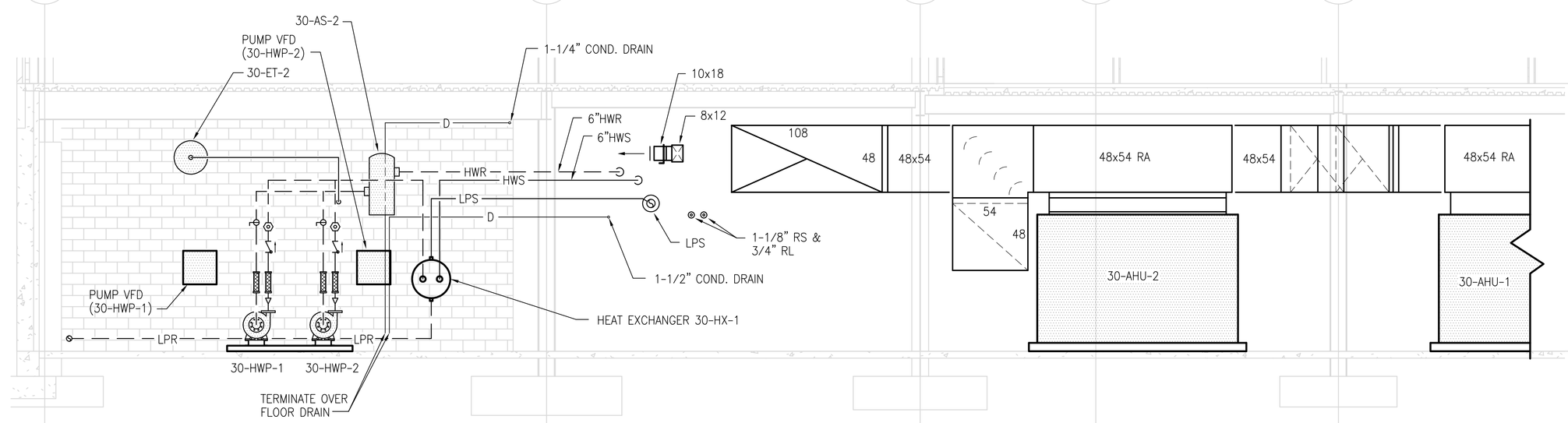

4 HVAC Section
SCALE: 1/4"=1'-0"

FOR CONSTRUCTION
FULLY SPRINKLERED

Revisions:	Date

CONSULTANTS:

HDR

HDR Architecture, Inc.

1101 King Street | Suite 400 | Alexandria, Virginia 22314-2944 | 703.518.8500

ARCHITECT/ENGINEERS:

ARCHITECTURE ENGINEERING INTERIOR DESIGN DESIGN/BUILD

ASTORINO

227 Fort Pitt Boulevard Pittsburgh Pennsylvania 15222
TEL 412 765 3700 FAX 412 765 3711 www.astorino.com

Drawing Title	HVAC Sections
Approved: Project Director	
Project Title	VA CARES CONSOLIDATION VAMC, PITTSBURGH, PA RESEARCH OFFICE BLDG.
Project Number	646CA2500R
Building Number	30
Location	VAPHS UNIVERSITY DRIVE
Date	08-18-10
Checked	JS
Drawn	RAN
Drawing Number	MH3-101
Dwg. -- of --	

Office of Facilities Management

Department of Veterans Affairs

VA FORM 08-6231, OCT 1978

P:\Project\200542500\CAD\UNIVERSITY DRIVE\Research Office Building\HVAC\MH3-101.dwg RNOLLA 06/24/10 - 07:58:2