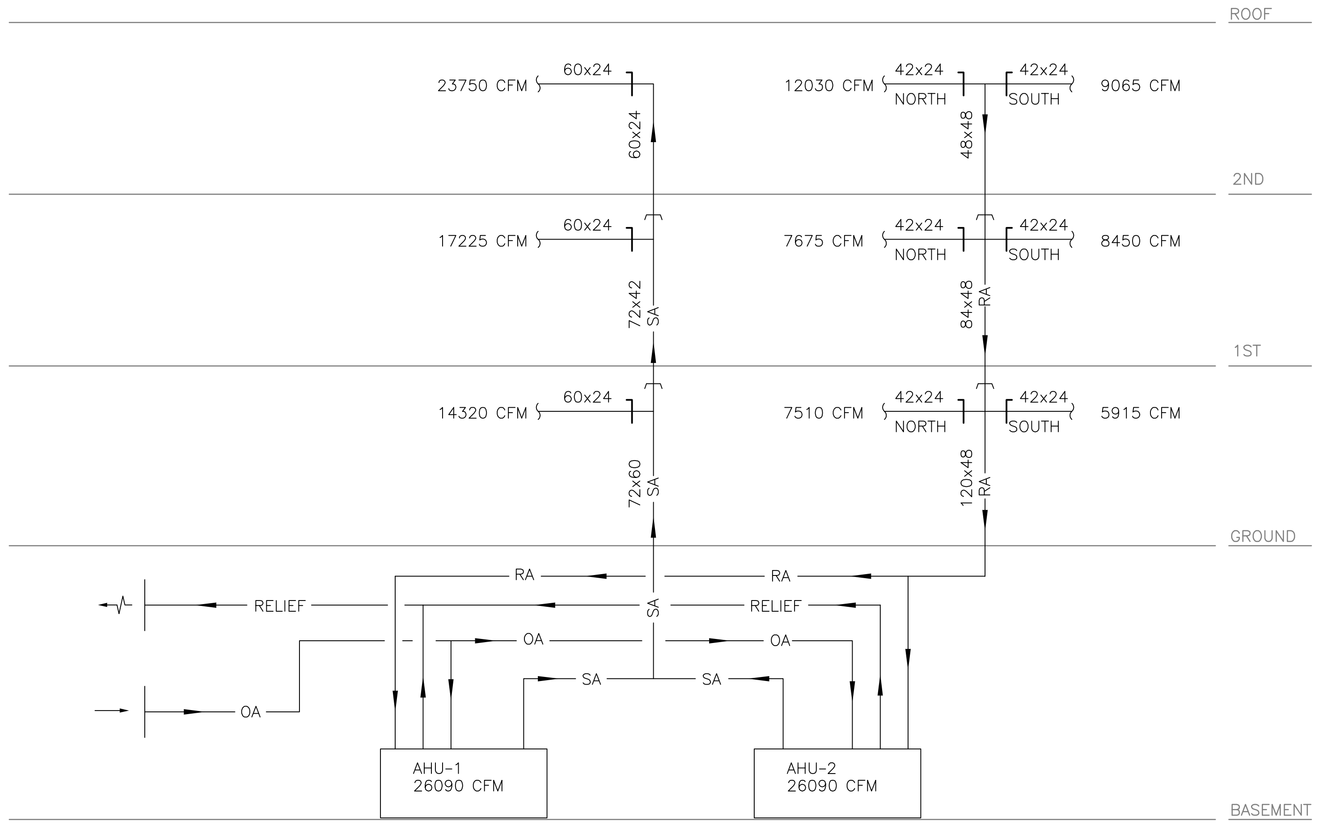

2 HVAC Air Handling Unit Riser Diagram
SCALE: N.T.S.

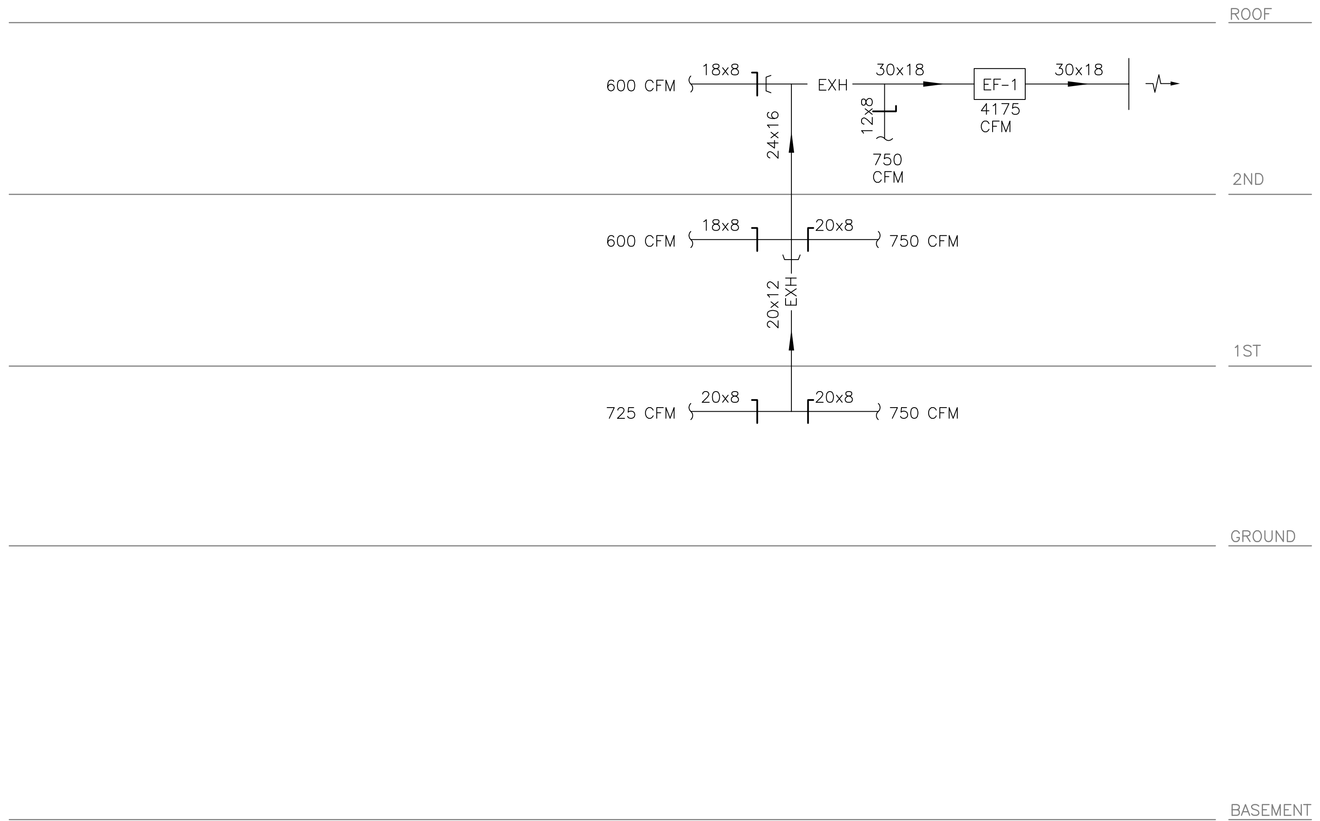

1 HVAC Exhaust Riser Diagram
SCALE: N.T.S.

FOR CONSTRUCTION
FULLY SPRINKLERED

Revisions:	Date

CONSULTANTS:

HDR Architecture, Inc.
1101 King Street | Suite 400 | Alexandria, Virginia 22314-2944 | 703.518.8500

ARCHITECT/ENGINEERS:

ARCHITECTURE
ENGINEERING
INTERIOR DESIGN
DESIGN/BUILD
ASTORINO
227 Fort Pitt Boulevard Pittsburgh Pennsylvania 15222
TEL 412 765 1700 FAX 412 765 1711 www.astorino.com

Drawing Title
HVAC Ductwork Riser Diagrams

Approved: Project Director

Project Title
VA CARES CONSOLIDATION
VAMC, PITTSBURGH, PA
RESEARCH OFFICE BLDG.

Location
VAPHS UNIVERSITY DRIVE

Date	Checked	Drawn
08-18-10	JS	RAN

Project Number
646CA2500R

Building Number
30

Drawing Number
MH4-101
Dwg. . of

Office of Facilities Management
Department of Veterans Affairs

VA FORM 08-6231, OCT 1978