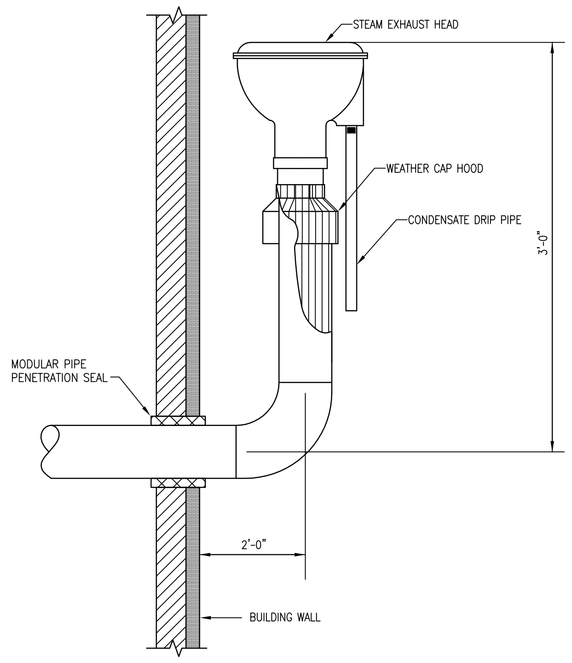

1 STEAM RELIEF STACK HEAD DETAIL
NTS

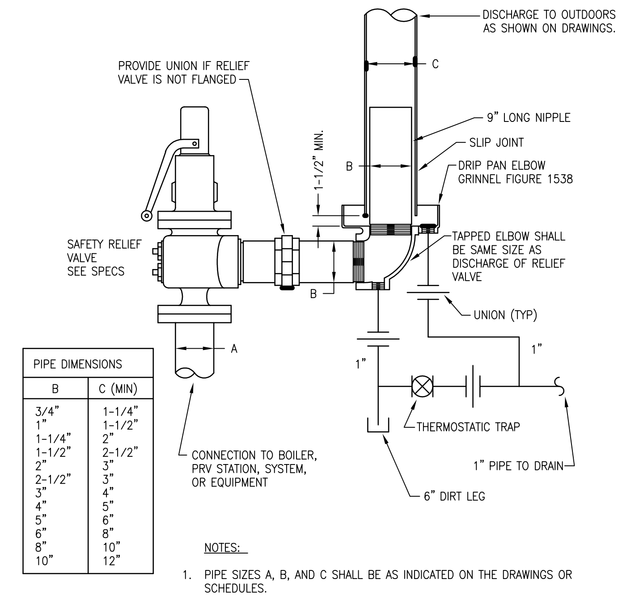

PIPE DIMENSIONS	
B	C (MIN)
3/4"	1-1/4"
1"	1-1/2"
1-1/4"	2"
1-1/2"	2-1/2"
2"	3"
2-1/2"	3"
3"	4"
4"	5"
5"	6"
6"	8"
8"	10"
10"	12"

NOTES:
1. PIPE SIZES A, B, AND C SHALL BE AS INDICATED ON THE DRAWINGS OR SCHEDULES.

2 STEAM RELIEF VALVE DETAIL
NTS

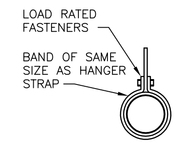

HANGER STRAPS OR RODS			
MAX. DUCT ø IN. [mm]	QUANTITY/SIZE IN. [mm]	MAX. LOAD LBS. [kg]	MAX. SPACING IN. [mm]
26 [650]	ONE 1 [25] x 22 GA STRAP	260 [119]	144 [3658]

NOTE:
TABULATED DATA FROM SMACNA ALLOWS FOR DUCT REINFORCING AND INSULATION, BUT NO EXTERNAL LOAD.

3 ROUND DUCT HANGERS DETAIL
NTS

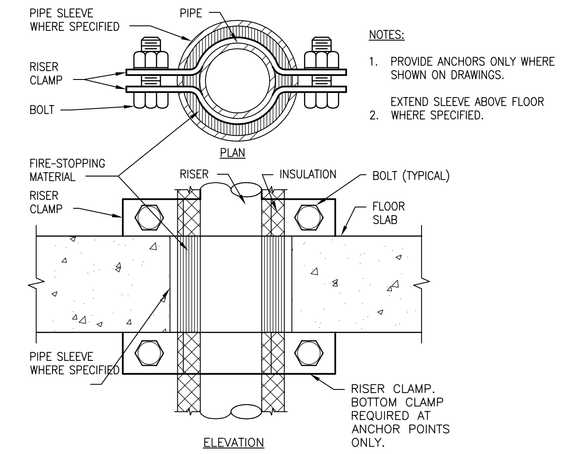

NOTES:
1. PROVIDE ANCHORS ONLY WHERE SHOWN ON DRAWINGS.
   EXTEND SLEEVE ABOVE FLOOR
2. WHERE SPECIFIED.

4 SUPPORT/ANCHOR FOR PIPE RISERS DETAIL
NTS

DESIGNER'S NOTE:
SHOW REQUIRED ANCHORS ON PLAN, SECTIONS OR DIAGRAMS. THIS DETAIL IS RARELY REQUIRED. PIPING IS USUALLY IN A CHASE.

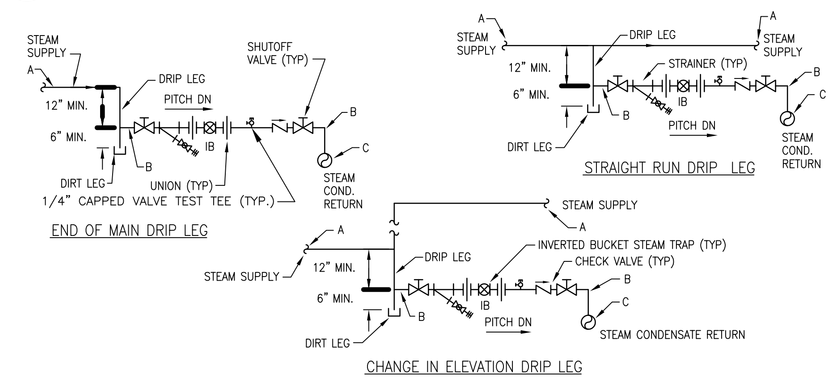

NOTES:
1. PIPE SIZES A, B, AND C SHALL BE AS INDICATED ON THE DRAWINGS OR SCHEDULES. PIPE SIZE B SHALL BE 3/4" MINIMUM.
2. STEAM SHUTOFF VALVES SHALL BE: 2" & SMALLER: BALL (FULL PORT) OR GATE VALVES; 2-1/2" & LARGER: GATE VALVES
3. INSTALL DRIP LEGS EVERY 100 FEET IN STRAIGHT RUN WHEN PIPE IS PITCHED DOWN IN DIRECTION OF FLOW AND EVERY 50 FEET WHEN PIPE IS PITCHED DOWN IN DIRECTION OPPOSITE OF STEAM FLOW.
4. DRIP LEGS: PIPE FULL SIZE UP TO 4" STEAM MAINS; 4" FOR 4", 5", 6", AND 8" STEAM MAINS; AND HALF SIZE FOR STEAM MAINS LARGER THAN 8".

5 STEAM DRIP LEG DETAIL
NTS

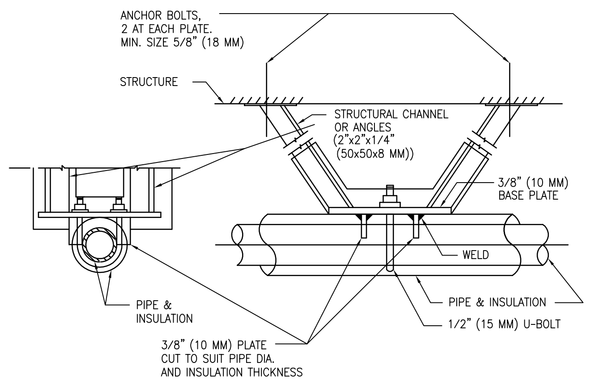

NOTE: INSULATE ANCHOR AS INDICATED FOR COLD PIPING.

6 HORIZONTAL PIPE ANCHOR DETAIL
NTS

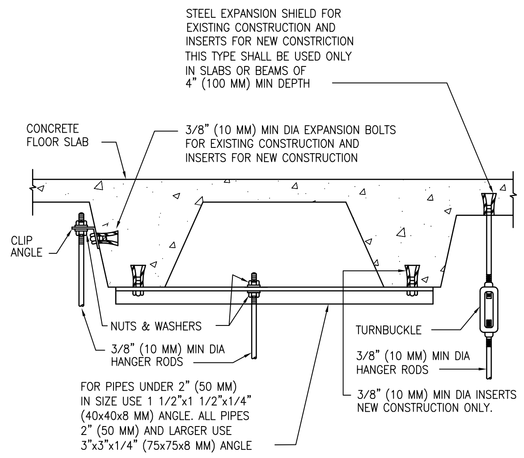

7 METHOD OF SECURING HANGER RODS IN CONCRETE SLABS AND BEAMS DETAIL
NTS

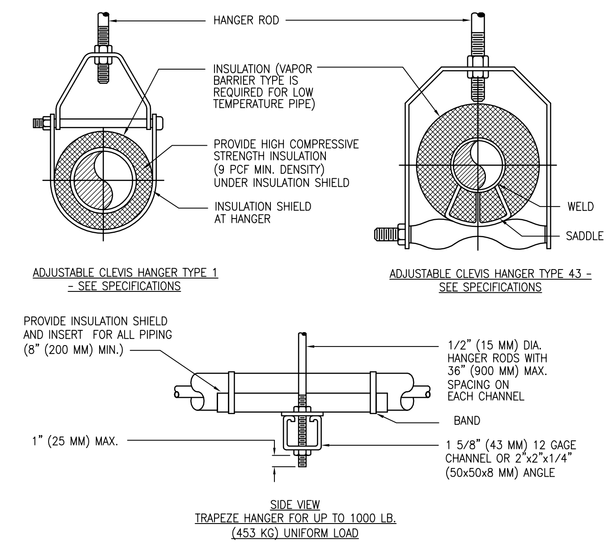

MAXIMUM PIPE/TUBING SUPPORT SPACING												
NOM. SIZE	IN. (MM)	THRU 3/4 THRU (20)	1 (25)	1 1/4 (32)	1 1/2 (40)	2 (50)	2 1/2 (65)	3 (75)	4 (100)	5 (125)	6 (150)	8 (200)
PIPE	FT. (M)	7 (2.1)	7 (2.1)	7 (2.1)	9 (2.7)	10 (3.0)	11 (3.4)	12 (3.7)	14 (4.1)	16 (4.9)	17 (5.2)	19 (6.8)
TUBING	FT. (M)	5 FT 5 FT	6 (1.8)	7 (2.1)	8 (2.4)	8 (2.4)	9 (2.7)	10 (3.0)	12 (3.7)	13 (4.0)	14 (4.1)	16 (4.9)
NOTE: FOR TRAPEZE HANGER TAKE SPACING OF SMALLEST SIZE ON TRAPEZE.												

8 TYPICAL PIPE HANGERS DETAIL
NTS

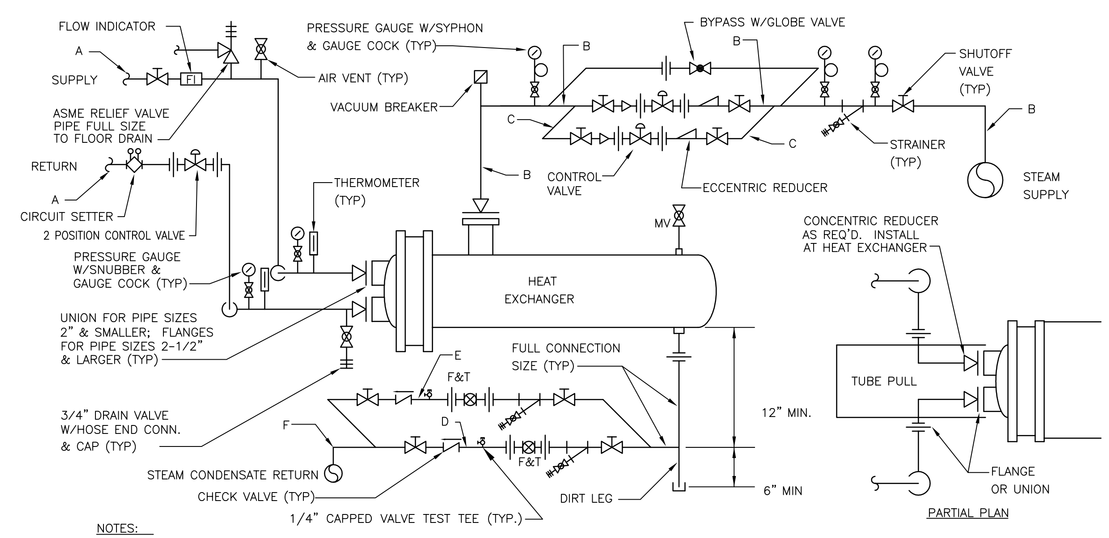

NOTES:
1. PIPE SIZES A, B, C, D, E AND F SHALL BE AS INDICATED ON THE DRAWINGS OR SCHEDULES.
2. CONTROL VALVE BYPASS PIPE SIZE SHALL BE 1 PIPE SIZE SMALLER THAN PIPE SIZE A.
3. STEAM SHUTOFF VALVES SHALL BE: 2" & SMALLER: BALL (FULL PORT) OR GATE VALVES; 2-1/2" & LARGER: GATE VALVES
4. WATER SYSTEM SHUTOFF VALVE SHALL BE: 2" & SMALLER: BALL (FULL PORT) OR PLUG VALVES; 2-1/2" & LARGER: BUTTERFLY OR PLUG VALVES
5. IN LIEU OF CIRCUIT SETTER VALVE, A BALANCING VALVE WITH GEAR OPERATORS (4" & LARGER ONLY), POSITION INDICATORS, AND MAXIMUM ADJUSTABLE STOPS MAY BE USED: 2" AND SMALLER: BALL (REDUCED PORT) OR PLUG VALVES; 2-1/2" AND LARGER: BUTTERFLY OR PLUG VALVES
6. SIZE CONTROL VALVES FOR 1/3 AND 2/3 CAPACITY

9 STEAM TO WATER HEAT EXCHANGER DETAIL
NTS

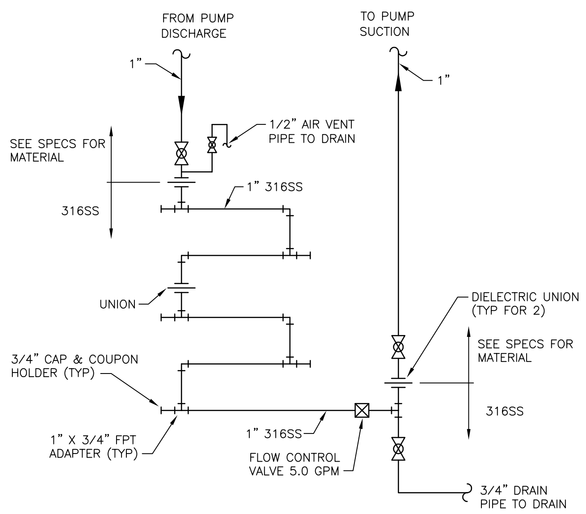

10 COUPON RACK DETAIL
NTS

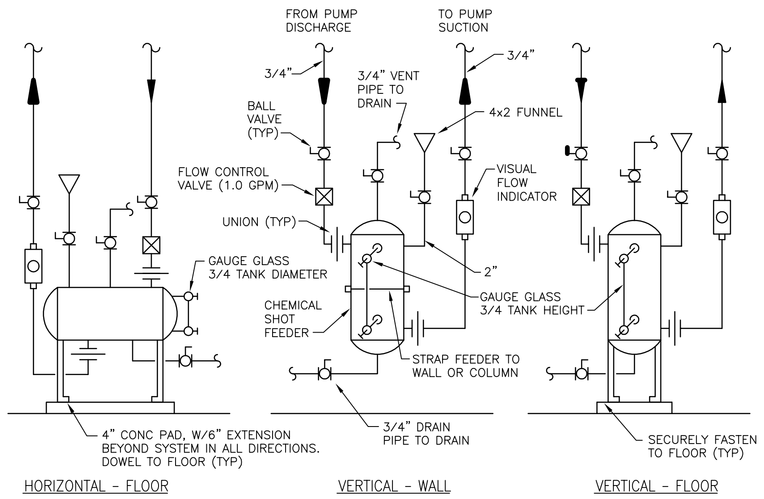

11 CHEMICAL SHOT FEEDER DETAIL
NTS

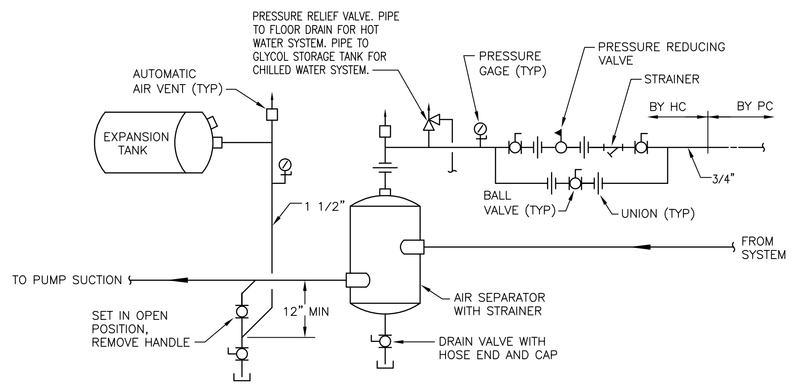

12 AIR SEPARATOR / EXPANSION TANK DETAIL
NTS

FOR CONSTRUCTION
FULLY SPRINKLERED

Revisions:	Date

CONSULTANTS:

HDR Architecture, Inc.
1101 King Street | Suite 400 | Alexandria, Virginia 22314-2944 | 703.518.8500

ARCHITECT/ENGINEERS:

ARCHITECTURE ENGINEERING INTERIOR DESIGN DESIGN/BUILD
ASTORINO
227 Fort Pitt Boulevard Pittsburgh Pennsylvania 15222
TEL 412 765 1700 FAX 412 765 1711 www.astorino.com

Drawing Title: **HVAC Piping Details**

Approved: Project Director

Project Title: **VA CARES CONSOLIDATION VAMC, PITTSBURGH, PA RESEARCH OFFICE BLDG.**

Location: **VAPHS UNIVERSITY DRIVE**

Date: **08-18-10** | Checked: **JS** | Drawn: **RAN**

Project Number: **646CA2500R**

Building Number: **30**

Drawing Number: **MH7-103**

Dwg. . of

Office of Facilities Management

Department of Veterans Affairs

VA FORM 08-6231, OCT 1978