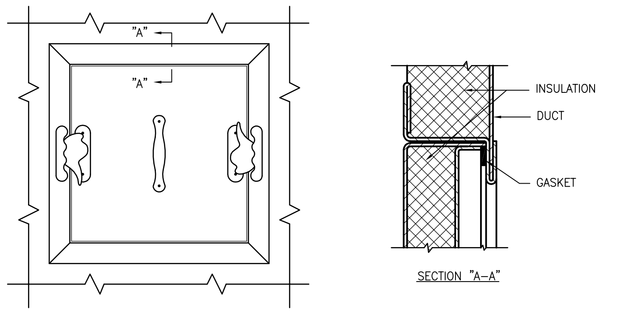

NOTE:
ACCESS PANELS SHALL BE USED ON EQUIPMENT AND DUCTWORK INSTALLED ABOVE FINISHED CEILINGS.

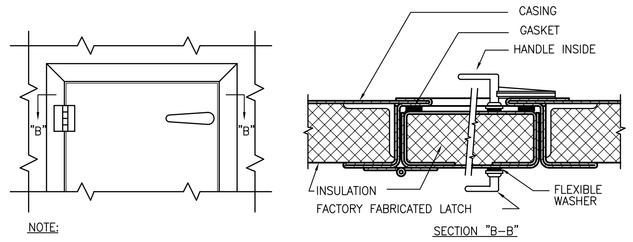

NOTE:
ACCESS DOORS SHALL BE USED ON AIR HANDLING UNITS AND DUCTWORK INSTALLED IN EQUIPMENT ROOMS.

NOTES:
1. LATCHES SHALL BE OF THE WEDGE TYPE TO CLOSE DOORS TIGHTLY.
2. HINGES ON THE ACCESS DOORS SHALL HAVE NON–CORROSIVE PINS.

1 ACCESS PROVISIONS DETAIL
NTS

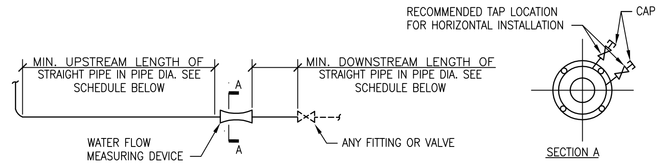

WATER FLOW MEASURING DEVICE INSTALLATION SCHEDULE

TYPE	MIN. UPSTREAM LENGTH OF STRAIGHT PIPE IN PIPE DIA.		MIN. DOWNSTREAM LENGTH OF STRAIGHT PIPE IN PIPE DIAMETERS
	FOR SIDE TEE	FOR VALVE OR OTHER FITTING	
ORIFICE FLANGE OR FLOATING BALL WITH IMPACT TUBE.	20	10	5
VENTURI, AUTOMATIC BALANCING CONTROL VALVE, OR INSERTION VELOCITY AVERAGING AND MEASURING TUBE	10	5	2

NOTES:
1. DIMENSIONS SHOWN IN SCHEDULE ARE MINIMUM REQUIRED. IF MANUFACTURER OF FURNISHED WATER FLOW MEASURING DEVICE RECOMMENDS A GREATER DIMENSION, USE THOSE DIMENSIONS.
2. INSTALL THE WATER FLOW MEASURING DEVICE SO THE FLOW ARROW ON THE DEVICE IS IN THE SAME DIRECTION AS THE FLOW.
3. THE WATER FLOW MEASURING DEVICE MAY BE INSTALLED IN EITHER HORIZONTAL OR VERTICAL PIPE. UNITS REQUIRING REMOTE METERS SHALL HAVE THE METER CONNECTIONS LOCATED ON OR NEAR THE SIDE WHEN INSTALLED IN HORIZONTAL PIPE. SEE SECTION A. THE METER CONNECTIONS CAN BE INSTALLED IN ANY POSITION WHEN INSTALLED IN VERTICAL PIPE.

2 WATER FLOW MEASURING DEVICE INSTALLATION DETAIL AND INSTALLATION SCHEDULE
NTS

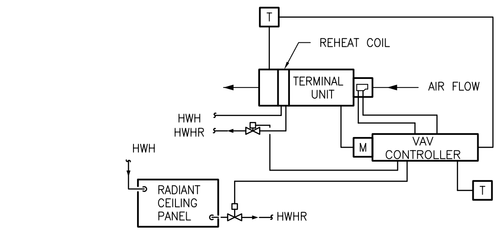

3 VAV AIR TERMINAL UNIT WITH REHEAT CONTROL DIAGRAM (TYPE "D") COMBINED WITH PERIMETER RADIANT CEILING PANELS
NTS

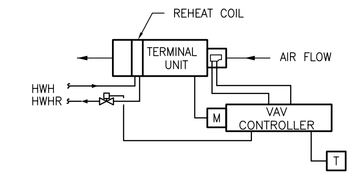

4 VAV AIR TERMINAL UNIT WITH REHEAT CONTROL DIAGRAM (TYPE "C")
NTS

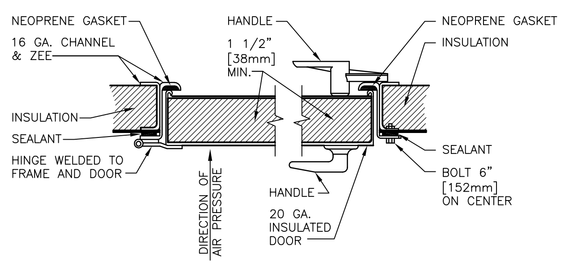

5 ACCESS PANEL FOR HIGH PRESSURE DUCT SYSTEMS DETAIL
NTS

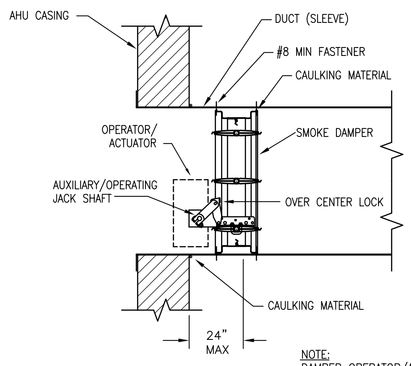

NOTE:
DAMPER OPERATOR/ACTUATOR SHALL BE FACTORY INSTALLED.

6 SMOKE DAMPER INSTALLATION DETAIL
NTS

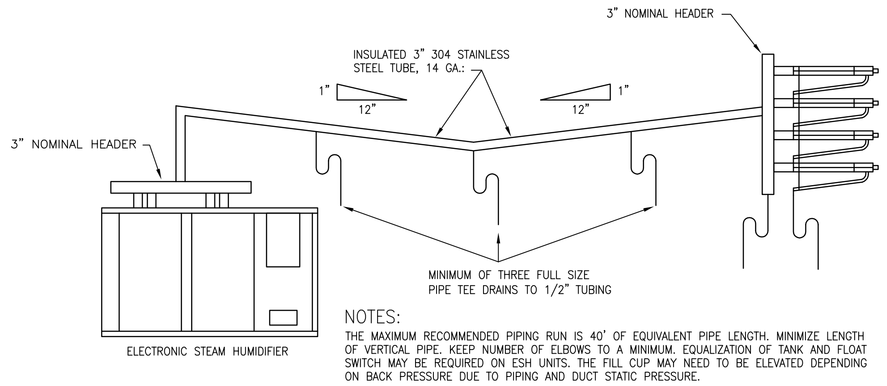

NOTES:
THE MAXIMUM RECOMMENDED PIPING RUN IS 40' OF EQUIVALENT PIPE LENGTH. MINIMIZE LENGTH OF VERTICAL PIPE. KEEP NUMBER OF ELBOWS TO A MINIMUM. EQUALIZATION OF TANK AND FLOAT SWITCH MAY BE REQUIRED ON ESH UNITS. THE FILL CUP MAY NEED TO BE ELEVATED DEPENDING ON BACK PRESSURE DUE TO PIPING AND DUCT STATIC PRESSURE.

7 STEAM DISTRIBUTION PIPING IN AIR HANDLING UNITS
NTS

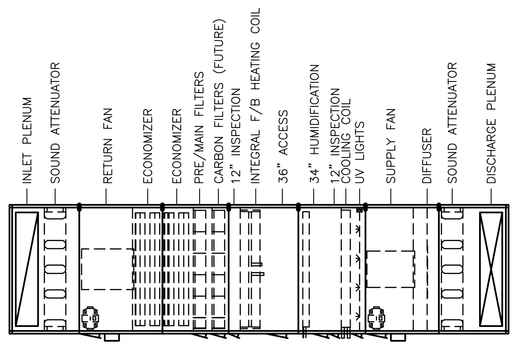

NOTES:
1. ACCESS DOORS SHALL BE GASKETED AND HINGED TO OPEN AGAINST FAN OPERATING PRESSURE TO PREVENT AIR LEAKAGE.
2. MINIMUM ACCESS DOOR WIDTH SHALL BE 24" [610mm].
3. ACCESS DOOR HEIGHT SHALL BE DETERMINED BY UNIT CASING BUT NOT TO EXCEED 6'–0" [1829mm].
4. ACCESS DOORS ON FAN SUCTION SIDE SHALL OPEN OUTWARD.
5. ACCESS DOORS ON FAN DISCHARGE SIDE SHALL OPEN INWARD.

8 AIR HANDLING UNIT COMPONENTS AND ACCESS DOOR SWING DETAIL
1/8" = 1'–0"

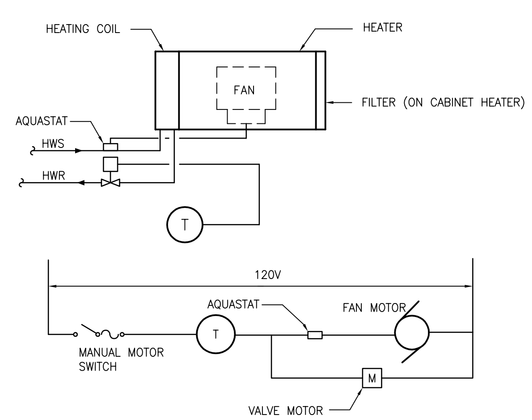

9 HOT WATER UNIT HEATER AND CABINET HEATER CONTROLS AND DEVICES DETAIL
NTS

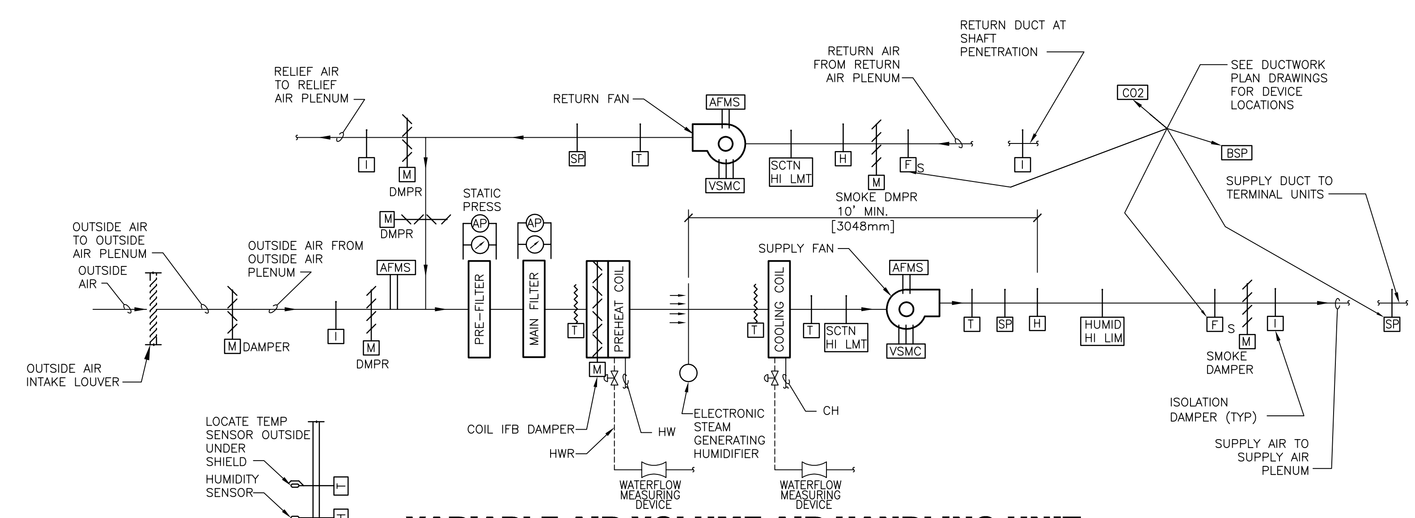

10 VARIABLE AIR VOLUME AIR HANDLING UNIT WITH ECONOMIZER CONTROL DIAGRAM
NTS

FOR CONSTRUCTION
FULLY SPRINKLERED

Revisions:	Date

CONSULTANTS:

HDR Architecture, Inc.
1101 King Street | Suite 400 | Alexandria, Virginia 22314-2944 | 703.518.8500

ARCHITECT/ENGINEERS:

ARCHITECTURE ENGINEERING INTERIOR DESIGN DESIGN/BUILD
ASTORINO
227 Fort Pitt Boulevard Pittsburgh Pennsylvania 15222
TEL 412.765.1700 FAX 412.765.1711 www.astorino.com

Drawing Title: **HVAC Unit, Device and Contol Details and Diagrams**
Approved: Project Director

Project Title: **VA CARES CONSOLIDATION VAMC, PITTSBURGH, PA RESEARCH OFFICE BLDG.**
Location: **VAPHS UNIVERSITY DRIVE**
Date: **08-18-10** | Checked: **JS** | Drawn: **RAN**

Project Number: **646CA2500R**
Building Number: **30**
Drawing Number: **MH7-104**
Dwg. . of

Office of Facilities Management
Department of Veterans Affairs

VA FORM 08–6231, OCT 1978