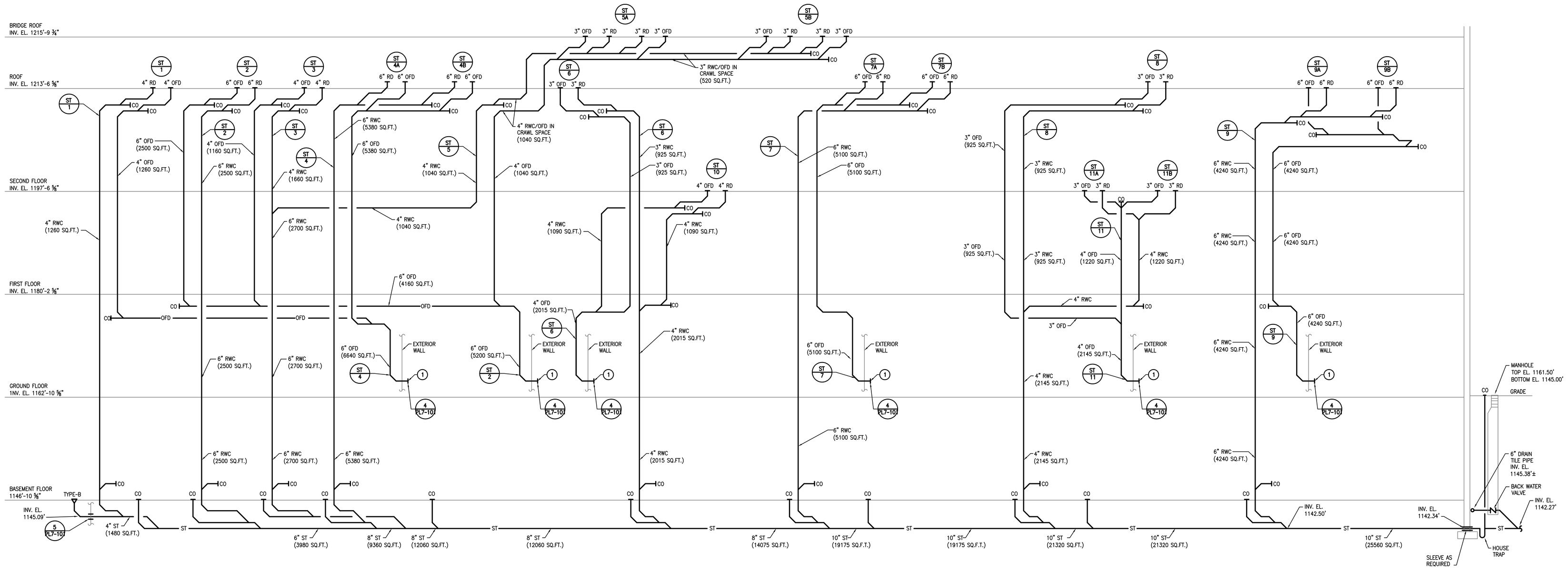

1 Storm Stack Diagram
SCALE: NTS

PLUMBING NOTES

1. TERMINATE OVER FLOW DRAIN PIPE 6" ABOVE GRADE. COVER PIPE OPENING WITH RODENT SCREEN.

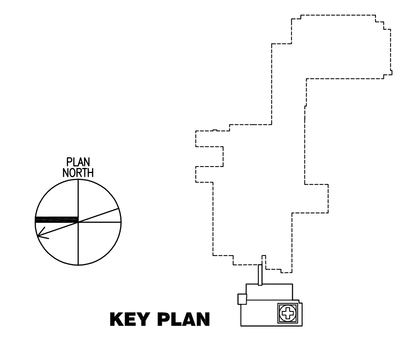

FOR CONSTRUCTION
FULLY SPRINKLERED

PROGRESS PRINT 01-31-06

Revisions:	Date

CONSULTANTS:

HDR

HDR Architecture, Inc.

1101 King Street | Suite 400 | Alexandria, Virginia 22314-2944 | 703.518.8500

ARCHITECT/ENGINEERS:

ARCHITECTURE ENGINEERING INTERIOR DESIGN DESIGN/BUILD

ASTORINO

227 Fort Pitt Boulevard Pittsburgh Pennsylvania 15222
TEL 412 765 3700 FAX 412 765 3711 www.astorino.com

Drawing Title: **Research Office Bldg. Plumbing Diagrams**

Approved: Project Director

Project Title: **VA CARES CONSOLIDATION VAMC, PITTSBURGH, PA RESEARCH OFFICE BLDG.**

Location: **VAPHS UNIVERSITY DRIVE**

Date: **08-18-10** | Checked: **MGR** | Drawn: **BMG**

Project Number: **646CA2500R**

Building Number: **30**

Drawing Number: **PL4-102**

Dwg. -- of --

Office of Facilities Management

Department of Veterans Affairs

VA FORM 08-6231, OCT 1978