Plumbing Fixture Connection Schedule

SEE SPECIFICATIONS FOR COMPLETE DESCRIPTION OF ALL TYPES

NUMBER	DESCRIPTION	SOIL	WASTE	VENT	COLD WATER	HOT WATER	REMARKS
P-101	WATER CLOSET	4"	—	2"	1"	—	FLOOR MOUNTED
P-103	WATER CLOSET	4"	—	2"	1"	—	WALL HUNG
P-201	URINAL	—	2"	2"	3/4"	—	WALL HUNG
P-202	URINAL - HANDICAPPED	—	2"	2"	3/4"	—	WALL HUNG
P-403	LAVATORY	—	1 1/2"	1 1/2"	1/2"	1/2"	WALL HUNG - FOOT PEDALS
P-414	LAVATORY	—	1 1/2"	1 1/2"	1/2"	1/2"	WALL HUNG
P-421	LAVATORY	—	1 1/2"	1 1/2"	1/2"	1/2"	UNDERCOUNTER MOUNTED
P-502	SERVICE SINK	—	3" or 4"	2"	1/2"	1/2"	FLOOR MOUNTED
P-517	SINK	—	1 1/2"	1 1/2"	1/2"	1/2"	SINGLE BOWL- STAINLESS STEEL
P-518	SINK	—	1 1/2"	1 1/2"	1/2"	1/2"	SINGLE BOWL- STAINLESS STEEL
P-609	ELECTRIC WATER COOLER	—	1 1/2"	1 1/2"	1/2"	—	BARRIER FREE / DUAL HEIGHT
P-801	WALL HYDRANT	—	—	—	3/4"	—	NON-FREEZE W/ BOX
P-804	HOSE BIBB	—	—	—	3/4"	—	MECHANICAL ROOMS
TYPE-C	FLOOR DRAIN	—	3" or 4"	2"	—	—	IN MECHANICAL ROOMS
TYPE-B	FLOOR DRAIN	—	3" or 4"	2"	—	—	IN FINSHED SPACES

Water Heater Schedule - Basis of Design

NUMBER	LOCATION	KW	AMPS	WATTS	VOLTS	STORAGE CAPACITY	REMARKS
EWH-1	JANITORS CLOSETS	24	28.9	12,000	480-3ø	30	TYPICAL OF 3 - A.O. SMITH MODEL DSE-30-24
EWH-2	STAFF LOUNGE / CONFERENCE ROOMS	6	22	6,000	277-1ø	-	TYPICAL OF 5 - CHRONOMITE MODEL E-60

Sump Pump Schedule - Basis of Design

TAG No.	LOCATION	SERVICE	PUMP DATA			PUMP DATA			REMARKS
			TYPE	GPM	TDH	HP	AMPS	POWER	
SP-1	ELEVATOR PIT	WATER	VERT.	100	20	2	21	120/1/60	STANCOR - MODEL SE200

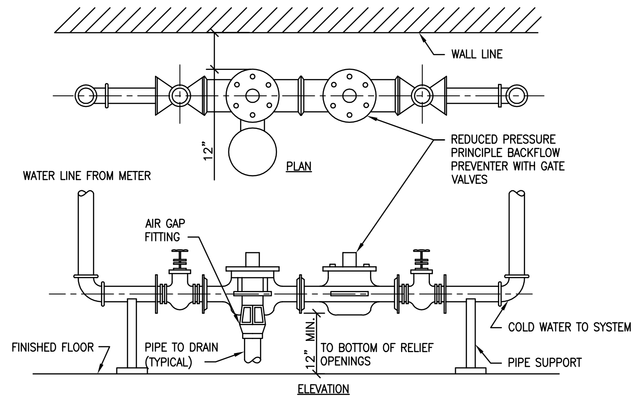

1 Water Service Entrance Detail
SCALE: None

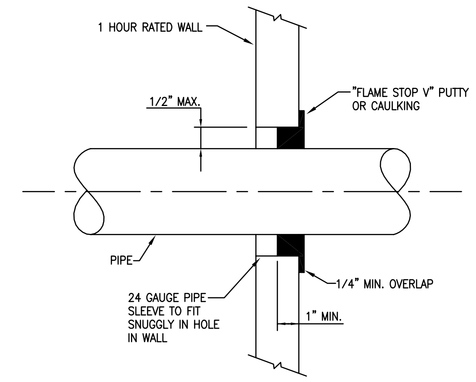

2 Typical Wall Penetration Detail
SCALE: NONE

Hot Water Circulation Pump Schedule - Basis of Design

TAG No.	GPM	T.D.H (FEET)	AMPS	WATTS	ELECTRICAL VOLT/PH/HZ	REMARKS
RCP-1	5	6	0.39	39	120-1-60	B&G MODEL NBF-8S/LW - WITH AQ-1/2"

Domestic Water Booster Pump Schedule - Basis of Design

TAG No.	GPM	T.D.H (FEET)	H.P.	RPM	ELECTRICAL VOLT/PH/HZ	REMARKS
DWP-1	80	170	5	3500	480-3-60	CANARIIS CORPORATION MODEL CR-15-3
DWP-2	80	170	5	3500	480-3-60	CANARIIS CORPORATION MODEL CR-15-3

Plumbing General Notes

1. ALL WORK SHOWN IS NEW.
2. REFER TO ARCHITECTURAL DRAWINGS FOR EXACT LOCATION OF EQUIPMENT.
3. SPACE ABOVE CEILINGS IS CRITICAL - COORDINATE ALL WORK WITH OTHER TRADES AND EXISTING UTILITIES LOCATED ABOVE CEILING. THIS CONTRACTOR SHALL VERIFY ALL EXISTING CONDITIONS AND DIMENSIONS PRIOR TO STARTING WORK OR ORDERING MATERIALS.
4. DRAWINGS ARE DIAGRAMMATIC - THIS CONTRACTOR SHALL FIELD VERIFY ALL PIPE ROUTING. ADDITIONAL OFFSETS TO BE EXPECTED.
5. NO PIPING SHALL BE INSTALLED ABOVE ELECTRICAL PANELBOARDS OR SWITCHGEAR PER NATIONAL ELECTRICAL CODE ARTICLE 384.
6. REFER TO PLUMBING FIXTURE SCHEDULE FOR PIPE SIZES NOT SHOWN IN PLAN VIEW.
7. FURNISH ACCESS PANELS SO AS TO PROVIDE SUITABLE ACCESS TO ALL CONCEALED VALVES, SAFEWASTE DRAINS AND OTHER CONCEALED EQUIPMENT.
8. ALL NEW PIPING SHALL BE INSTALLED IN SUCH A WAY THAT DOES NOT HAMPER ACCESS TO VALVES, ACCESS DOORS OR EQUIPMENT.
9. ANY SPRAY-ON FIREPROOFING DAMAGED BY THE PLUMBING CONTRACTOR DURING INSTALLATION SHALL BE REPAIRED BY SAID CONTRACTOR IN ACCORDANCE WITH THE OWNERS INSTRUCTIONS.
10. ALL PATCHING AND PAINTING BY THE GENERAL CONTRACTOR UNLESS OTHERWISE NOTED.
11. THE PLUMBING CONTRACTOR SHALL FULLY INSULATE ALL ABOVE GRADE HORIZONTAL STORM WATER PIPING.
12. ALL WORK SHALL COMPLY WITH APPLICABLE CODES AND AUTHORITIES HAVING JURISDICTION.
13. THE PLUMBING CONTRACTOR WILL CHECK AND VERIFY ALL DIMENSIONS AND EXISTING CONDITIONS AT THE SITE BEFORE SUBMITTING A BID. THE PLUMBING CONTRACTOR SHALL TAKE EXISTING CONDITIONS INTO ACCOUNT WHEN PREPARING THE BID.
14. SHOULD THE CONTRACTOR FIND AFTER VISITING THE SITE, OR DURING CONSTRUCTION, ANY DISCREPANCIES, OMISSIONS, AMBIGUITIES OR CONFLICTS IN THE CONTRACT DRAWINGS, OR BE IN DOUBT AS TO THEIR MEANING, HE SHOULD NOTIFY THE ARCHITECT PRIOR TO COMMENCING WORK.
15. ALL PIPING THAT MAY BE CONCEALED IN WALLS IN BUILDING #1 3RD FLOOR NEAR BRIDGE TIE-IN THAT ARE BEING REMOVED (WHETHER OR NOT SUCH PIPING IS SPECIFICALLY INDICATED) SHALL BE CAPPED OR PLUGGED AT THE APPROPRIATE MAINS UNLESS SUCH PIPING MUST REMAIN AS PART OF AN ACTIVE SYSTEM. THE STATUS OF ALL SUCH PIPING AS TO BEING ACTIVE OR INACTIVE SHALL BE VERIFIED BY THIS CONTRACTOR BEFORE ANY DISCONNECTION, CAPPING, PLUGGING, OR RELOCATION WORK IS PERFORMED. EXISTING PIPING THAT MUST REMAIN AS PART OF AN ACTIVE SYSTEM SHALL BE RELOCATED AS REQUIRED AND AS DIRECTED IN THE FIELD. UNLESS NOTED OTHERWISE. ALL SUCH PIPING SHALL BE CONCEALED.

Plumbing Legend

SAN	SANITARY SEWER LINE
ST	STORM SEWER LINE
RWC	STORM PIPING
G	GAS LINE
OFD	OVERFLOW DRAIN PIPING
	VENT LINE
	COLD WATER LINE
	HOT WATER LINE
	HOT WATER RETURN LINE
	BALL VALVE
CO	CLEANOUT TO FINISH FLOOR
DT	DRAIN TILE
CO	CLEANOUT BELOW FLOOR
	DROP IN LINE
	RISE IN LINE
	"P" TRAP
AP	ACCESS PANEL
INV EL	INVERT ELEVATION
V	VENT
RWC	RAIN WATER CONDUCTOR
VTR	VENT THRU ROOF
P-###	FIXTURE TYPE - SEE SPECIFICATIONS
F.C.O.	FLOOR CLEANOUT
G.C.	GENERAL CONTRACTOR
P.C.	PLUMBING CONTRACTOR
H.C.	HEATING CONTRACTOR
RD	ROOF DRAIN
OFD	OVER FLOW DRAIN
WM	WATER METER
TP	TRAP PRIMER
X/X	UTILITY RISER DESIGNATION

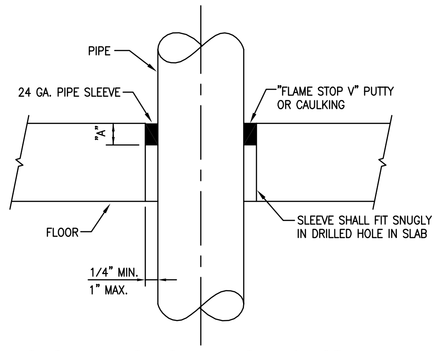

3/4" - 2" PIPE SIZE - 2" MIN. "FLAME STOP V" DEPTH (DIM. "A") 2
1/2" - 6" PIPE SIZE - 4" MIN. "FLAME STOP V" DEPTH (DIM "A")

NOTE:
INSTALLATION SHALL BE IN ACCORDANCE WITH THE MANUFACTURERS INSTRUCTIONS AND THE CITY OF PITTSBURGH BUILDING INSPECTION DEPARTMENT REGULATIONS

3 Typical Floor Penetration Detail
SCALE: NONE

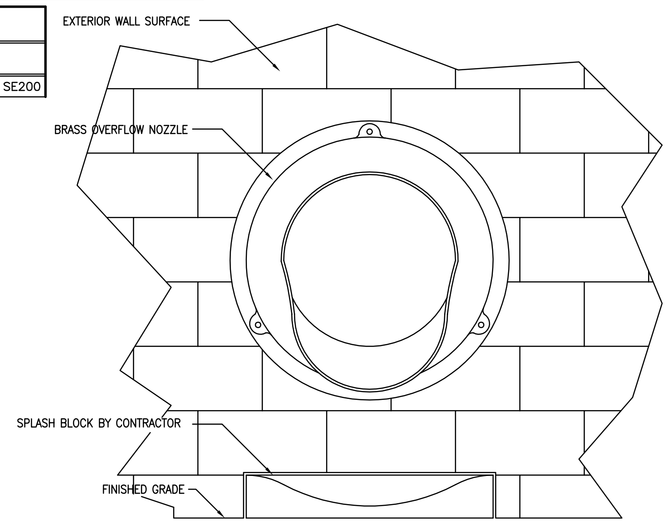

4 Rain Water Overflow Nozzle Detail
SCALE: N.T.S.

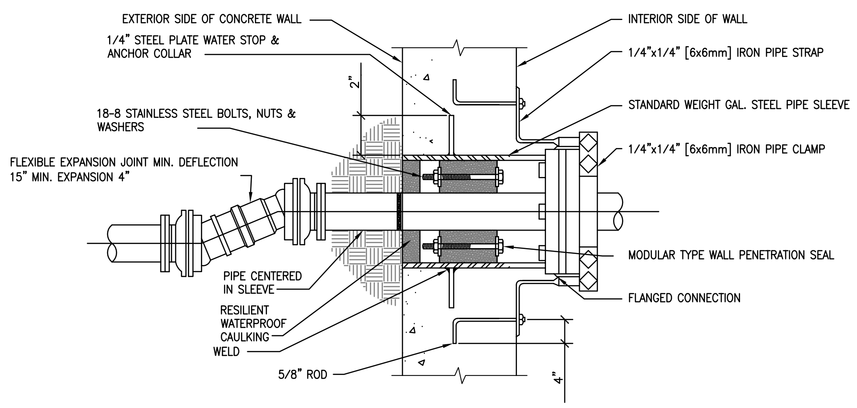

5 Pipe Penetration Through Walls Below Grade
SCALE: NONE

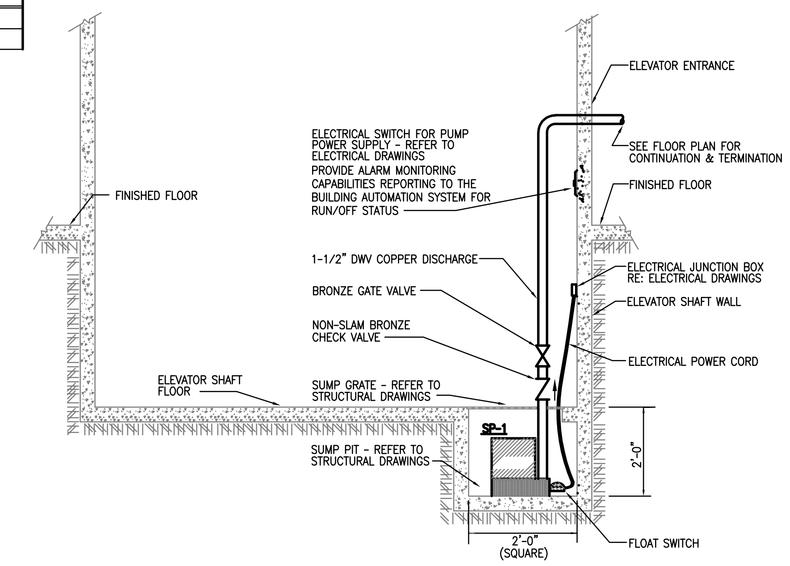

6 Elevator Sump Pump Detail
SCALE: NONE

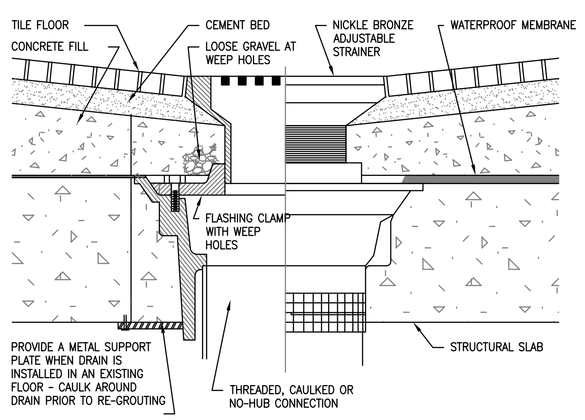

7 TYPE "C" Floor Drain Detail
SCALE: NONE

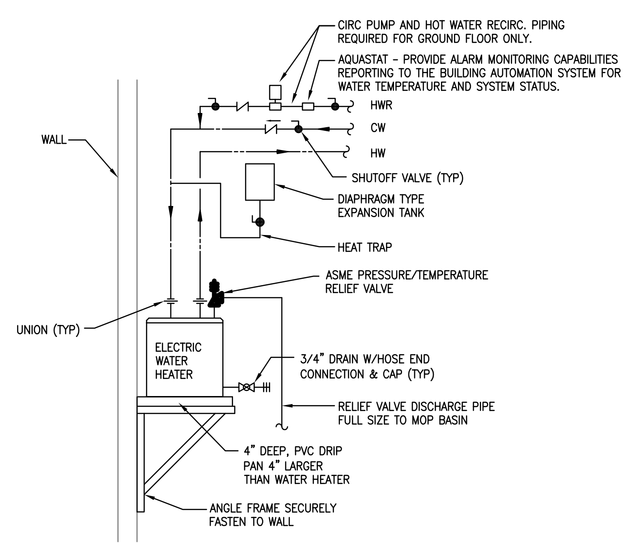

8 Electric Water Heater Detail - Wall Mounted
SCALE: NONE

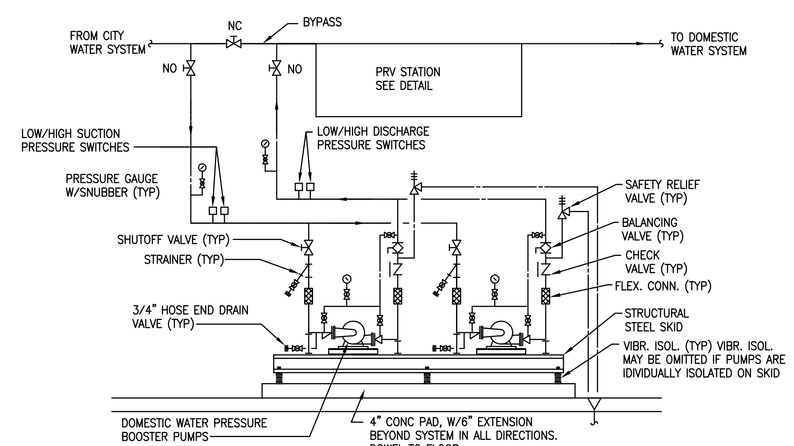

NOTES:
1. SHUTOFF VALVES SHALL BE: 6" AND SMALLER: BALL (FULL PORT); 6" AND LARGER: BUTTERFLY OR PLUG VALVES.
2. BALANCING VALVES SHALL BE PROVIDED WITH GEAR OPERATORS (4" & LARGER ONLY), POSITION INDICATORS, AND MAXIMUM ADJUSTABLE STOPS: 2" AND SMALLER: BALL (REDUCED PORT) OR PLUG VALVES; 2-1/2" AND LARGER: BUTTERFLY OR PLUG VALVES.
3. PROVIDE ALARM MONITORING CAPABILITIES REPORTING TO THE BUILDING AUTOMATION SYSTEM FOR INLET/OUTLET PRESSURE, POWER CONSUMPTION, PUMPS RPM, RUNNING TIMES OF PUMPS.

9 Duplex Water Booster Pump Detail
SCALE: NONE

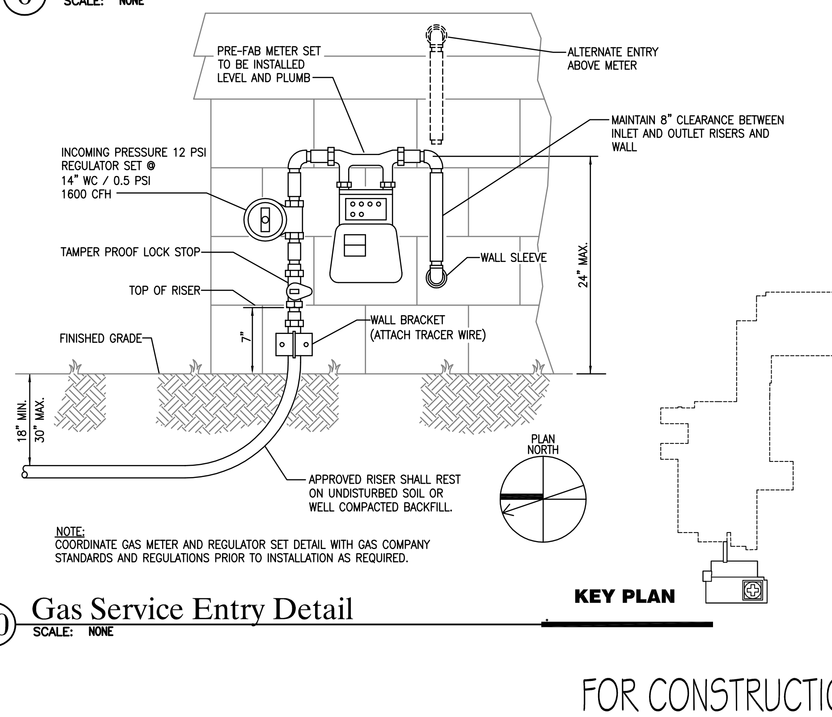

NOTE:
COORDINATE GAS METER AND REGULATOR SET DETAIL WITH GAS COMPANY STANDARDS AND REGULATIONS PRIOR TO INSTALLATION AS REQUIRED.

10 Gas Service Entry Detail
SCALE: NONE

FOR CONSTRUCTION
FULLY SPRINKLERED

Revisions:	Date

CONSULTANTS:

HDR Architecture, Inc.
1101 King Street | Suite 400 | Alexandria, Virginia 22314-2944 | 703.518.8500

ARCHITECT/ENGINEERS:

ARCHITECTURE ENGINEERING INTERIOR DESIGN DESIGN/BUILD
ASTORINO
227 Fort Pitt Boulevard Pittsburgh Pennsylvania 15222
TEL 412 765 1700 FAX 412 765 1711 www.astorino.com

Drawing Title: Research Office Bldg. Plumbing Details	Project Title: VA CARES CONSOLIDATION VAMC, PITTSBURGH, PA RESEARCH OFFICE BLDG.	Project Number: 646CA2500R	Office of Facilities Management
Approved: Project Director	Location: VAPHS UNIVERSITY DRIVE	Building Number: 30	
	Date: 08-18-10 / Checked: MGR / Drawn: BMG	Drawing Number: PL7-101 Dwg. -- of --	Department of Veterans Affairs

VA FORM 08-6231, OCT 1978