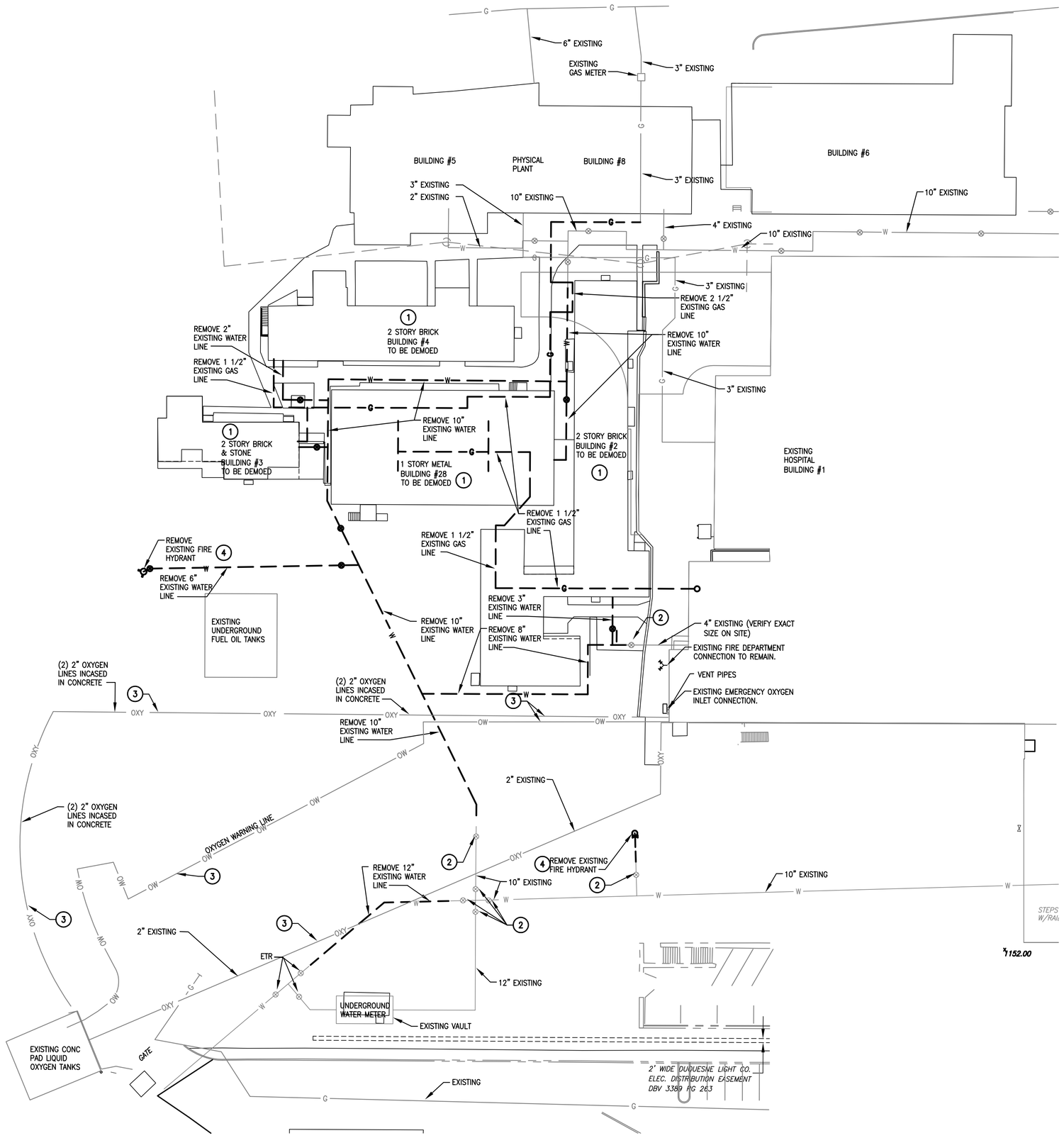

1 Site Plumbing Demolition Plan
SCALE: 1" = 30'-0"

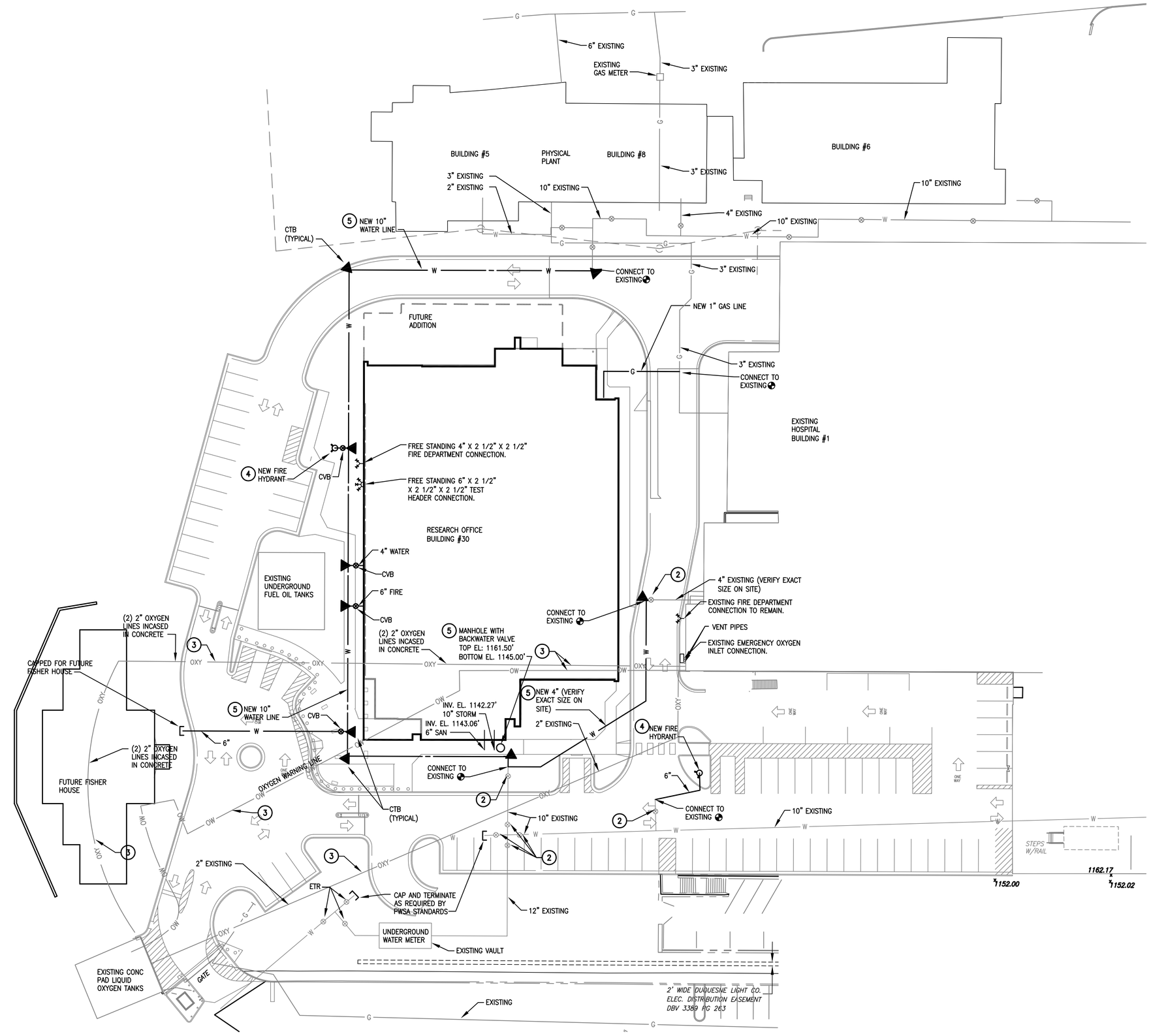

2 Site Plumbing Piping Plan
SCALE: 1" = 30'-0"

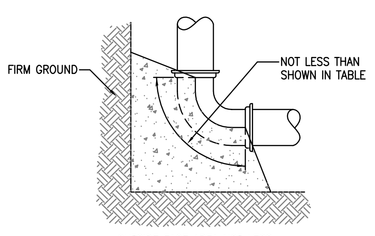

Blocking for Bends

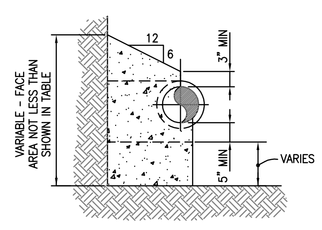

Applicable To Tees, Wyes & Bends

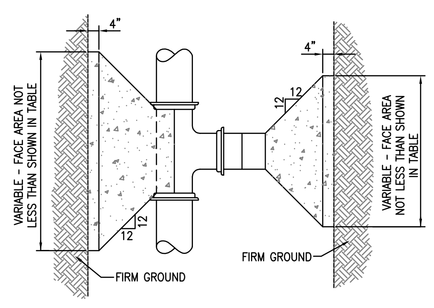

Blocking for Tees & Plugs

PIPE SIZE (IN.)	AREA **	TOTAL FORCE (LBS)	AREA OF BLOCK IN SQUARE FEET				
			TEES & PLUGS	90° BENDS	45° BENDS	22\½° BENDS	11†° BENDS
4	13	2900	1.0	1.0	1.0	1.0	1.0
6	29	6500	1.7	2.3	1.3	1.0	1.0
8	53	12000	3.0	4.1	2.2	1.2	1.0
10	82	19000	4.8	6.3	3.4	1.9	1.0
12	118	26800	6.7	9.1	4.9	2.5	1.3

NOTES:

ALL TEES, CROSSES, PLUGS, & BENDS OF TEN DEGREES OR MORE SHALL BE BLOCKED AGAINST FIRM EARTH WITH CONCRETE.

EARTH PRESSURE FIGURED AT 4000 lbs. PER SQUARE FOOT. IF EARTH ENCOUNTERED WILL NOT WITHSTAND THIS PRESSURE, THE AREA OF THE BLOCK MUST BE INCREASED PROPORTIONATELY.

CALCULATIONS ARE BASED ON 225 lbs. PER SQUARE FOOT OR 150 lbs. WORKING PRESSURE PLUS 50% FOR WATER HAMMER FOR PIPE SIZES 4" TO 24" INCLUSIVE.

3 Standard Method of Blocking Pipe Specials
SCALE: NONE

Plumbing Notes

1. REMOVE ALL EXISTING PLUMBING FIXTURES AND RELATED SANITARY, VENT, STORM, WATER, AND GAS PIPING SERVING DEMOLISHED BUILDINGS TO 5'-0" FROM BUILDING WALL.
2. EXTEND TOP OF EXISTING VALVE BOX TO NEW GRADE LEVEL AS REQUIRED.
3. VERIFY EXACT LOCATION OF EXISTING MAIN OXYGEN LINES SERVING BUILDING. RELOCATE LINES AS REQUIRED. PROVIDE UNIT PRICE TO RELOCATE OXYGEN LINES AS REQUIRED.
4. COORDINATE PHASING OF FIRE HYDRANT REMOVAL AND NEW FIRE HYDRANT INSTALLATION SO THAT CONTINUED FIRE PROTECTION TO THE EXISTING HOSPITAL AND SITE IS NOT INTERRUPTED DURING CONSTRUCTION PHASES.
5. FOR PRECAST MANHOLE DETAIL AND TRENCHING AND PAVEMENT REPAIR DETAIL REFER TO DRAWING CS7-900.

Site Plan Legend

OXY	OXYGEN LINE
W	WATER LINE
OW	OXYGEN WARNING LINE
G	GAS LINE
	EXISTING LINE TO BE CAPPED
	EXISTING LINE TO BE REMOVED
	CURB VALVE BOX
CVB	CURB VALVE BOX
ETR	EXISTING TO REMAIN
	CONNECT TO EXISTING
CTB	CONCRETE THRUST BLOCK

NORTH

FOR CONSTRUCTION
FULLY SPRINKLERED

Revisions:	Date

CONSULTANTS:

HDR

HDR Architecture, Inc.

1101 King Street | Suite 400 | Alexandria, Virginia 22314-2944 | 703.518.8500

ARCHITECT/ENGINEERS:

ARCHITECTURE ENGINEERING INTERIOR DESIGN DESIGN/BUILD

ASTORINO

227 Fort Pitt Boulevard Pittsburgh Pennsylvania 15222
TEL 412 765 1700 FAX 412 765 1711 www.astorino.com

Drawing Title: **Site Plans Plumbing**

Approved: Project Director

Project Title: **VA CARES CONSOLIDATION VAMC, PITTSBURGH, PA RESEARCH OFFICE BLDG.**

Location: **VAPHS UNIVERSITY DRIVE**

Date: **08-18-10** | Checked: **AAB** | Drawn: **MGR**

Project Number: **646CA2500R**

Building Number: **30**

Drawing Number: **PS5-000**

Dwg. -- of --

Office of Facilities Management

Department of Veterans Affairs

VA FORM 08-6231, OCT 1978

P:\Project\20050425.00\CAD\UNIVERSITY DRIVE\Research Office Building\Plumbing\PS5-000.dwg MRIEFT 08/03/10 ; 08:59:27