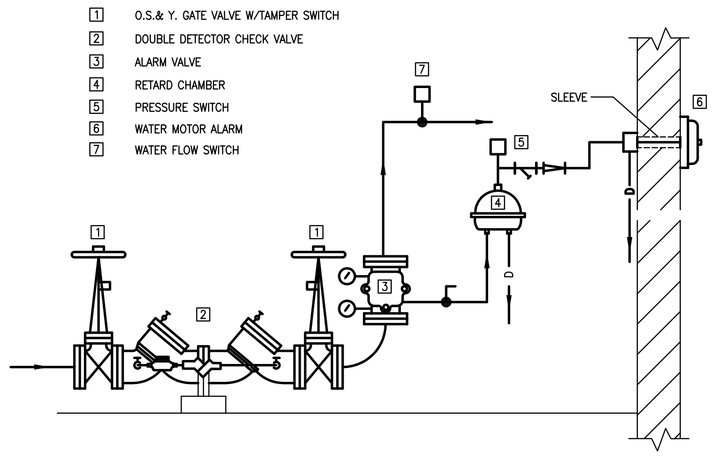

1 Fire Service Entrance Detail
SCALE: NONE

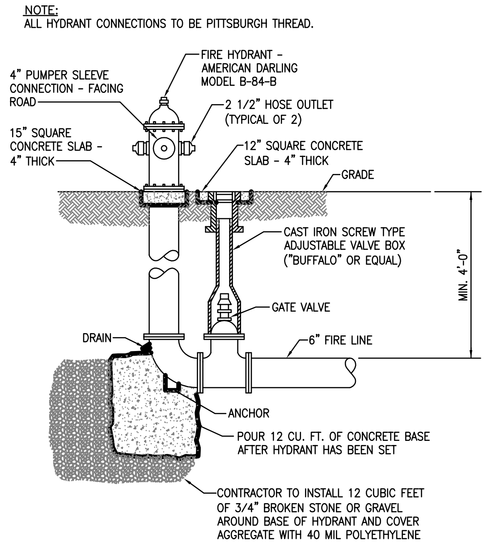

2 Fire Hydrant Setting Detail
SCALE: NONE

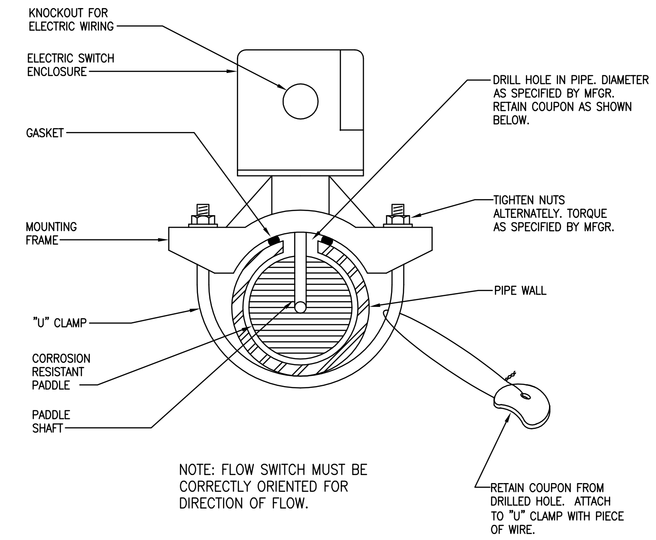

3 Typical Sprinkler Flow Switch Detail
SCALE: NONE

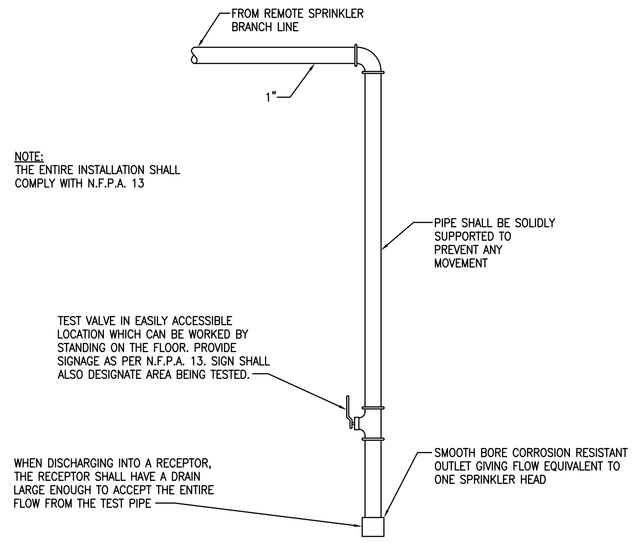

4 Sprinkler Inspector's Test and Drain
SCALE: NONE

1 FIRE DEPARTMENT CONNECTION - MOUNT 24" MIN., 36" MAX. ABOVE FINISHED GRADE.
2 FIRE PUMP HOSE TEST MANIFOLD MOUNT 30" MIN., 42" MAX. ABOVE FINISHED GRADE.
3 ONE FIRE PUMP HOSE TEST VALVE FOR EVERY 250 GPM RATING OF FIRE PUMP
9 CONTROL PANEL PRESSURE SWITCHES
10 FROM 10,000 GALLON BREAK TANK
15 WALL MOUNTED CONTROL PANEL - WITH PRESSURE SWITCHES
16 1/2" PRESSURE CONTROL LINE - PIPE TO PRESSURE SWITCH IN CONTROL PANEL
20 BASE ELBOW - TYPICAL
23 TO BUILDING FIRE PROTECTION SYSTEM
24 TO SITE FIRE PROTECTION SYSTEM, ALTERNATE LOCATION SHOWN, FLANGE 12" AFF OR INSIDE WALL
25 BUILDING EXTERIOR WALL
28 VIBRATION ISOLATION BASE WITH SPRING ISOLATORS
29 5'-0" MINIMUM DISTANCE BETWEEN GROUND FACE UNIONS IN THE 1/2" PRESSURE CONTROL LINE.
30 FLOOR DRAIN WITH FUNNEL
33 ECCENTRIC REDUCER
34 CONCENTRIC INCREASER

Fire Pump Piping Detail Keyed Notes

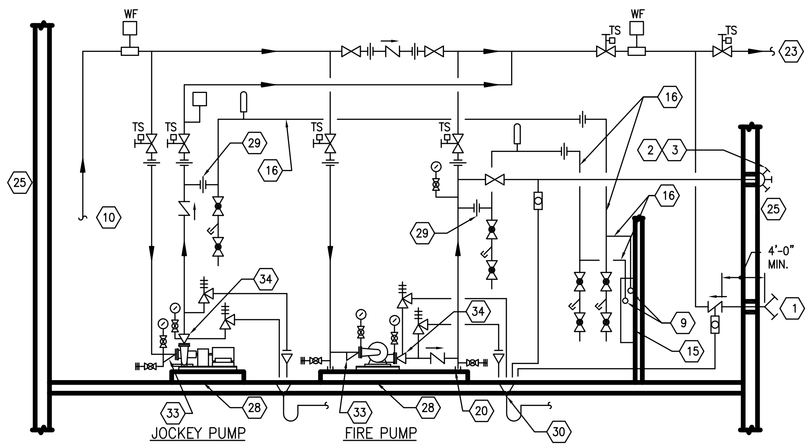

NOTES:
1. SEE DETAIL FOR FIRE PUMP AND JOCKEY PUMP DETAIL KEYED NOTES.
2. INSTALL AND PERFORM TESTS IN ACCORDANCE WITH NFPA 13, 14, 20, AND 24, THE NATIONAL ELECTRIC CODE, INSURANCE UNDERWRITERS, AND THE AUTHORITY HAVING JURISDICTION.
3. PROVIDE 4" CONCRETE HOUSEKEEPING PAD, WITH 6" EXTENSION BEYOND EQUIPMENT IN ALL DIRECTIONS. DOWEL TO FLOOR.

Fire Pump Piping Detail
SCALE: NONE

5 Fire Pump Piping Diagram
SCALE: NONE

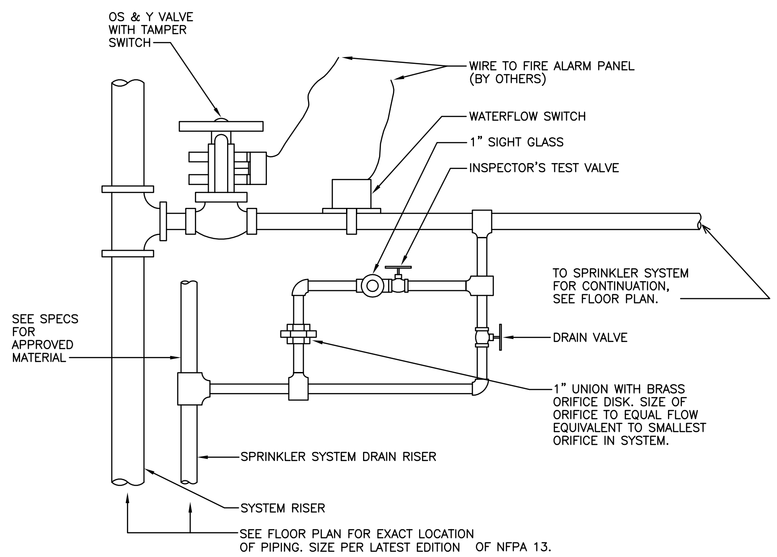

6 Typical Fire Protection Floor Control Supply
SCALE: NONE

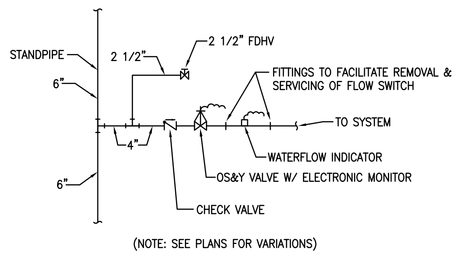

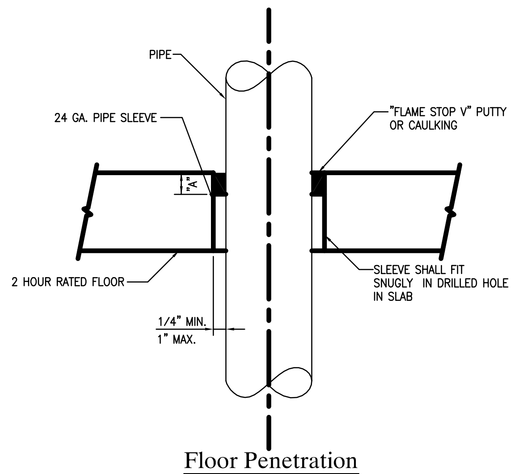

Floor Penetration

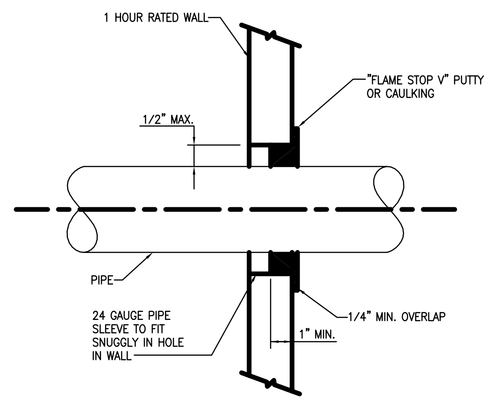

Wall Penetration

NOTES:
1. 3/4"-2" PIPE SIZE - 2" MIN. "FLAME STOP V" DEPTH (DIM. "A")
   2 1/2"-6" PIPE SIZE - 2" MIN. "FLAME STOP V" DEPTH (DIM "A")
2. INSTALLATION SHALL BE IN ACCORDANCE WITH THE MANUFACTURERS INSTRUCTIONS AND THE CITY OF PITTSBURGH BUILDING INSPECTION DEPARTMENT REGULATIONS

7 Fire Penetration Seal Detail
SCALE: NONE

FOR CONSTRUCTION
FULLY SPRINKLERED

Revisions:	Date

CONSULTANTS:

HDR Architecture, Inc.
1101 King Street | Suite 400 | Alexandria, Virginia 22314-2944 | 703.518.8500

ARCHITECT/ENGINEERS:

ARCHITECTURE ENGINEERING INTERIOR DESIGN DESIGN/BUILD
ASTORINO
227 Fort Pitt Boulevard Pittsburgh Pennsylvania 15222
TEL 412 765 3700 FAX 412 765 3711 www.astorino.com

Drawing Title	Research Office Bldg. Fire Protection Details
Approved: Project Director	
Project Title	VA CARES CONSOLIDATION VAMC, PITTSBURGH, PA RESEARCH OFFICE BLDG.
Location	VAPHS UNIVERSITY DRIVE
Date	08-18-10
Checked	MGR
Drawn	BMG
Project Number	646CA2500R
Building Number	30
Drawing Number	FP7-101
Dwg: -- of --	

Office of Facilities Management
Department of Veterans Affairs

VA FORM 08-6231, OCT 1978