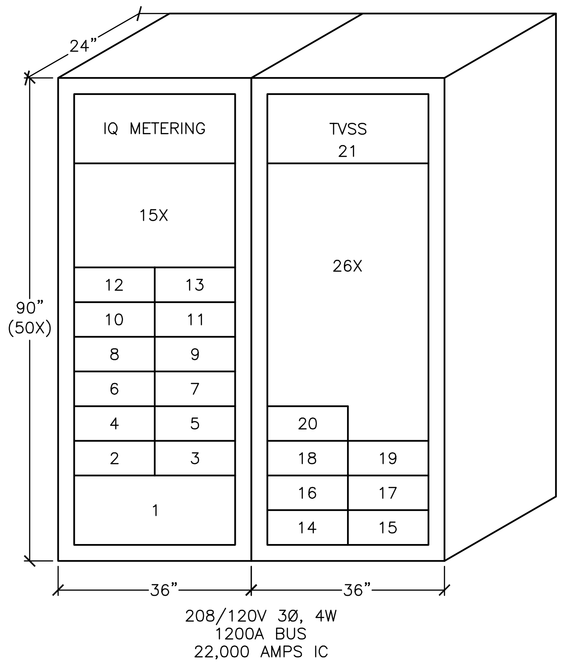

POSITION	CIRCUIT BREAKER SIZE	EQUIPMENT SERVIED	CONNECTED LOAD–KVA	DEMAND LOAD–KVA
1	1200A–3P	MCB	---	
2	100A–3P	PANELBOARD–BLA	6.68	4.3
3	100A–3P	PANELBOARD–BLB	2.40	1.5
4	225A–3P	PANELBOARD–GLA	21.6	14.0
5	225A–3P	PANELBOARD–GLB	18.8	12.2
6	225A–3P	PANELBOARD–GLC	29.8	19.4
7	225A–3P	PANELBOARD–GLD	16.5	10.7
8	225A–3P	PANELBOARD–1LA	20.6	13.4
9	225A–3P	PANELBOARD–1LB	14.6	9.5
10	225A–3P	PANELBOARD–1LC	36.0	23.4
11	225A–3P	PANELBOARD–1LD	17.6	11.4
12	225A–3P	PANELBOARD–2LA	24.4	15.8
13	225A–3P	PANELBOARD–2LB	15.2	9.8
14	225A–3P	PANELBOARD–2LC	34.6	22.5
15	225A–3P	PANELBOARD–2LD	17.6	11.4
16	225A–3P	SPARE	---	---
17	225A–3P	SPARE	---	---
18	150A–3P	SPARE	---	---
19	100A–3P	SPARE	---	---
20	100A–2P	PANELBOARD "GUARD BOOTH"	5.0	3.2
21		TVSS		
		TOTAL	281.38	182.50

1 Distribution Switchboard - DSBLA
SCALE: 3/4" = 1'-0"
(NORMAL)

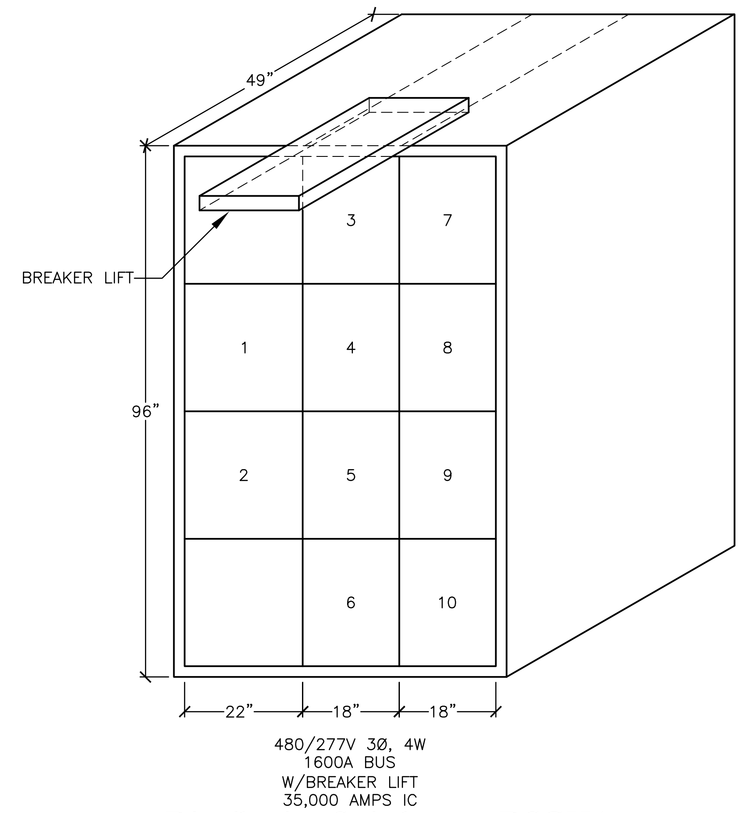

POSITION	CIRCUIT BREAKER SIZE	EQUIPMENT SERVIED	CONNECTED LOAD–KVA	DEMAND LOAD–KVA
1	---	METER (CH–IQ DP–4000)	---	---
2	1000A–3P	MCB	---	---
3	400A–3P	ATS – ELEV.	205.60	174.80
4	600A–3P	ATS – EQ	321.04	273.10
5	400A–3P	SPARE	---	---
6		PROVISIONS	---	---
7	400A–3P	ATS – LS	57.06	57.06
8	350A–3P	FIRE PUMP CONTROLLER	98.80	98.80
9	225A–3P	SPARE	---	---
10		PROVISIONS	---	---
		TOTAL	682.50	603.76

2 Distribution Switchgear - DSGHA
SCALE: 3/4" = 1'-0"
(EMERGENCY ONLY)

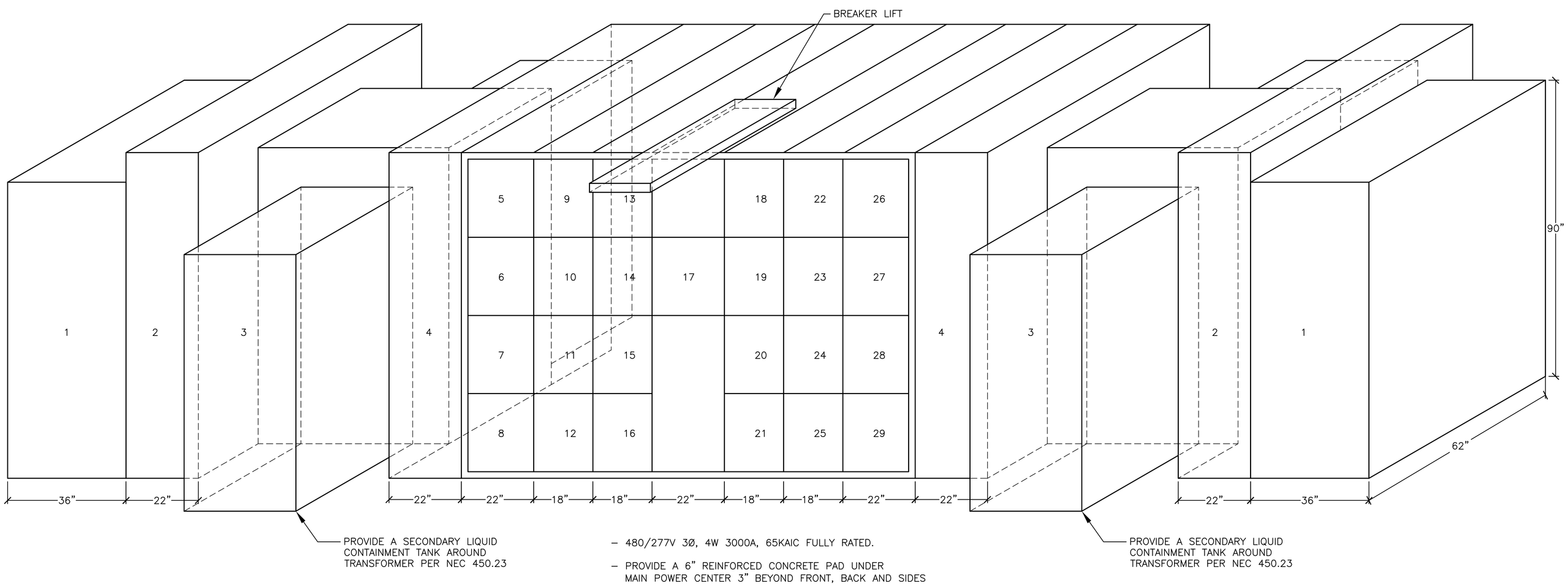

– 480/277V 3Ø, 4W 3000A, 65KAIC FULLY RATED.

– PROVIDE A 6" REINFORCED CONCRETE PAD UNDER MAIN POWER CENTER 3" BEYOND FRONT, BACK AND SIDES

– PROVIDE GROUND FAULT ON MAIN AND FEEDER BREAKERS.

– PROVIDE SINGLE PHASE PROTECTION ON MAIN CIRCUIT BREAKKERS.

POSITION	CIRCUIT BREAKER SIZE	EQUIPMENT SERVIED	CONNECTED LOAD–KVA	DEMAND LOAD–KVA
1	---	600A, 5KV LOAD BREAK SWITCH WITH 400A, E–RATED MEDIUM VOLTAGE FUSES	---	---
2	---	TRANSITION STRUCTURE	---	---
3	---	2000KVA SILICON TYPE TRANSFORMER, PRI:4160V, 3Ø SEC:480/277V, 3Ø, 4W, 5.75% IMPEDANCE	---	---
4	---	TRANSITION STRUCTURE	---	---
5	---	MAIN METERING	---	---
6	3000A–3P	MAIN CIRCUIT BREAKER	---	---
7	1600A–3P	PROVISION	---	---
8	---	TVSS (200KA)	---	---
9	600A–3P	DISTRIBUTION BOARD – PDPHA	170.7	170.7
10	450A–3P	CHILLER	270	---
11	600A–3P	DISTRIBUTION SB DSBLA–VIA T–1	281.38	182.5
12	1600A3P	PROVISION	---	---
13	400A–3P	ATS – LS	57.06	57.06
14	600A–3P	ATS – EQ	321.04	273.1
15	800A–3P	FUTURE WET LAB	380.2	---
16	1000A–3P	SPARE	---	---
17	3000A–4P	TIE CIRCUIT BREAKER (4–POLE)	---	---
18	600A–3P	DISTRIBUTION BOARD – PDPHB	204.6	173.9
19	450A–3P	FUTURE CHILLER	270	
20	400A–3P	ATS – ELEV	205.6	174.8
21	600A–3P	SPARE	---	---
22	800A–3P	FIRE PUMP CONTROLLER	98.8	98.8
23	600A–3P	FUTURE ANIMAL LAB	123	---
24	600A–3P	SPARE	---	---
25	1600A–3P	PROVISION	---	---
26	---	MAIN METERING	---	---
27	3000A–3P	MAIN CIRCUIT BREAKER	---	---
28	1600A–3P	PROVISION	---	---
29	---	TVSS (200KA)	---	---
		TOTAL	2382.38	1130.86

3 Main Power Center
SCALE: 3/4" = 1'-0"

FOR CONSTRUCTION
FULLY SPRINKLERED

Revisions:	Date

CONSULTANTS:

HDR Architecture, Inc.
1101 King Street | Suite 400 | Alexandria, Virginia 22314-2944 | 703.518.8500

ARCHITECT/ENGINEERS:

ARCHITECTURE ENGINEERING INTERIOR DESIGN DESIGN/BUILD
ASTORINO
227 Fort Pitt Boulevard Pittsburgh Pennsylvania 15222
TEL 412 765 1700 FAX 412 765 1711 www.astorino.com

Drawing Title: **Panel Elevations**

Approved: Project Director

Project Title: **VA CARES CONSOLIDATION VAMC, PITTSBURGH, PA RESEARCH OFFICE BLDG.**

Location: **VAPHS UNIVERSITY DRIVE**

Date | Checked: **TMR** | Drawn: **LLG**

Project Number: **646CA2500R**

Building Number: **30**

Drawing Number: **EP2-201**

Dwg. of

Office of Facilities Management

Department of Veterans Affairs

VA FORM 08–6231, OCT 1978

P:\Project\200542500\CAD\UNIVERSITY DRIVE\Research Office Building\Electrical\EP2-201.dwg LGARDNER 11/03/09 - 13:35:60