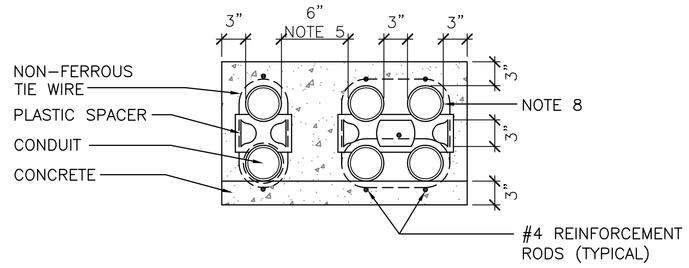

DUCT BANK NOTES:

1. CONCRETE SHALL BE 3,000 P.S.I. @ 28 DAYS OR AS SPECIFIED.
2. PROVIDE REINFORCING RODS ON TOP OF DUCTS WHEN CROSSING OR PLACING IN ROADWAYS. MINIMUM COVER BENEATH ROADWAYS SHALL BE 30".
3. MINIMUM COVER TO TOP OF ENVELOPE SHALL BE 24" U.N.O.
4. NON-FERROUS TIE WIRES TO BE IMBEDDED IN DUCT BED CONCRETE.
5. PROVIDE MINIMUM 6" SPACE BETWEEN POWER AND SIGNAL DUCTS. INCREASE SIZE AS REQUIRED.
6. REFER TO INDIVIDUAL DUCT SECTIONS AND CONDUIT AND CABLE SCHEDULE FOR NUMBER AND QUANTITY OF CONDUITS IN EACH DUCT BANK.
7. INSTALL YELLOW WARNING TAPE 12" ABOVE TOP OF DUCT BANK.
8. SCHEDULE 40 PVC CONDUIT SHALL BE USED EXCEPT THE FOLLOWING AREAS WHERE PVC COATED GALVANIZED RIGID STEEL IS REQUIRED.
   a. WHERE NOTED ON DRAWINGS.
   b. WHERE STEAM PIPING IS WITHIN 10 FEET OF DUCT BANK.
   c. ALL 90 DEGREE SWEEP ELBOWS.
   d. WHERE DUCT BANK PASSES BELOW ROADWAYS.
   e. WITHIN BLDG'S. BELOW SLAB.

1 Typical Duct Bank Detail
SCALE: No Scale

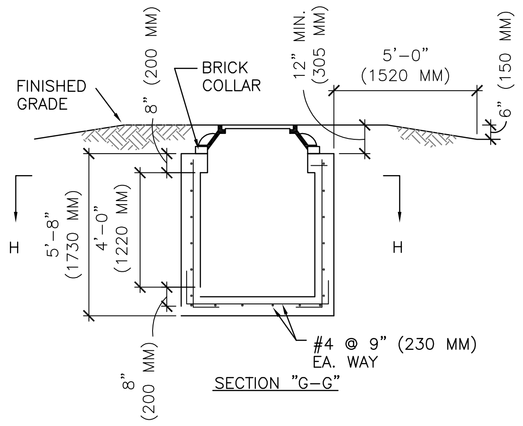

STRUCTURAL NOTES:

1. ALL REINFORCEMENT BARS FOR MANHOLES AND HANDHOLES SHALL BE #4.
2. TOP SLAB REINFORCEMENT CONSISTS OF BOTTOM BARS PLACED AS SHOWN. SHORT SPAN BARS SHALL BE ON THE BOTTOM LAYER.
3. BEND AND PLACE ALL REINFORCEMENT SO THAT IT SHALL BE 2" (50 MM) CLEAR OF ALL EXTERIOR SURFACES, 1-1/2" (40 MM) CLEAR OF ALL INTERIOR AND FLOOR SURFACES AND 1" (25 MM) CLEAR OF BOTTOM SURFACES OF TOP SLAB.
4. STRUCTURES SHALL BE OF REINFORCED CONCRETE. CONCRETE SHALL BE 3000 P.S.I. AT 28 DAYS UNLESS OTHERWISE SPECIFIED.

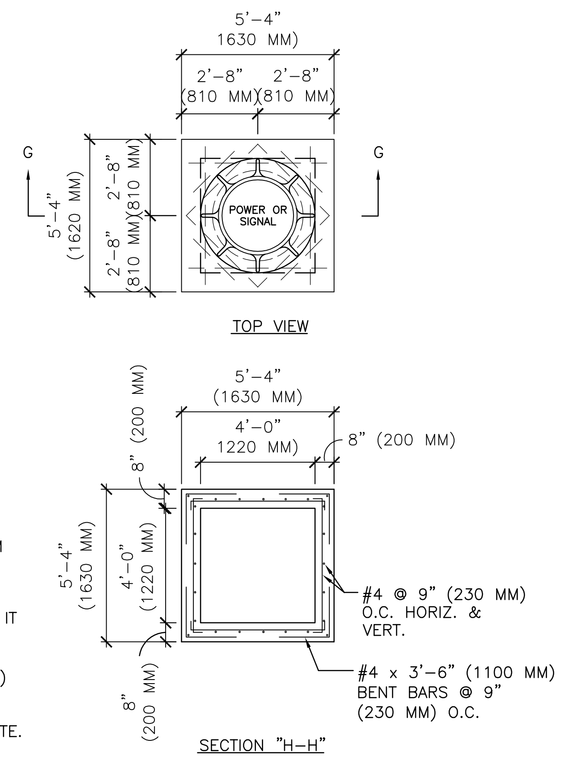

2 Structural Detail For Handholes - EHH-1
SCALE: Not To Scale

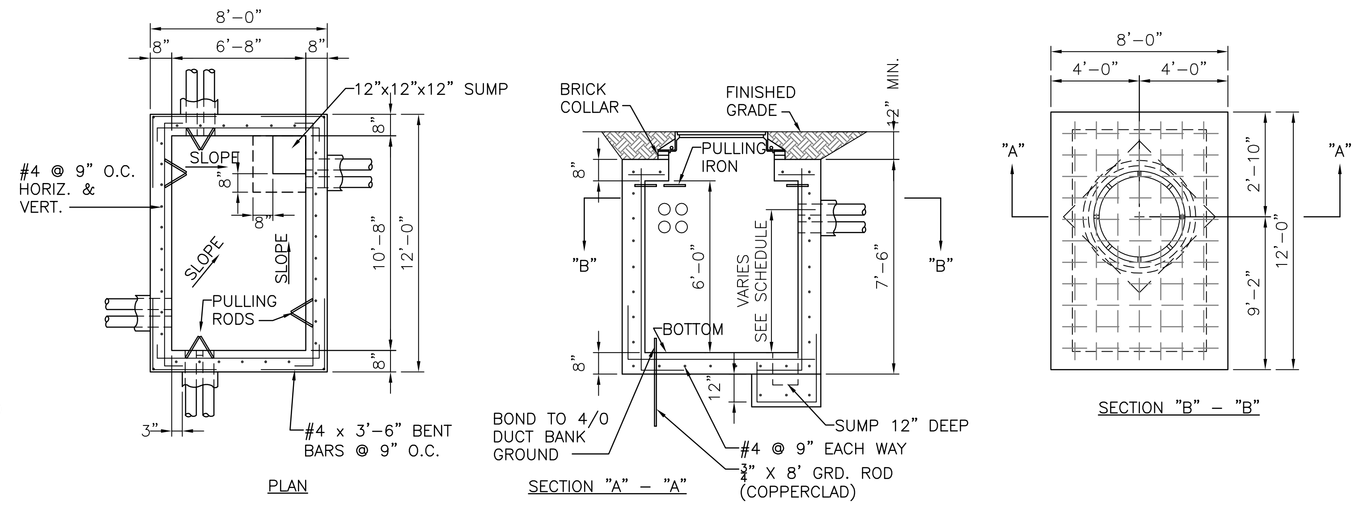

3 Structural Details for Manholes - EMH-1, EMH-2 and EMH-3
SCALE: No Scale

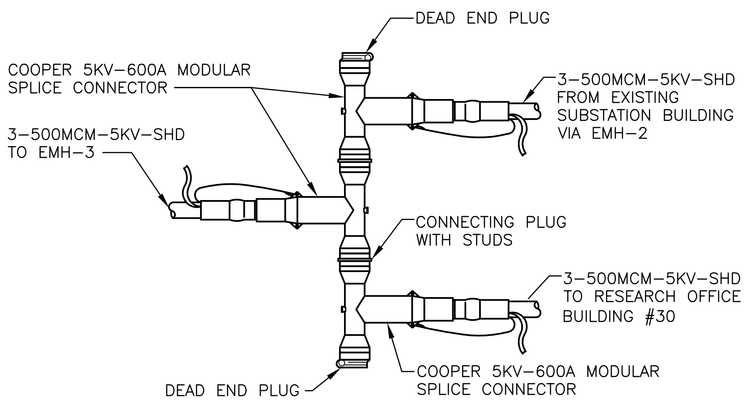

4 5KV Connector Detail (EMH-1)
SCALE: No Scale

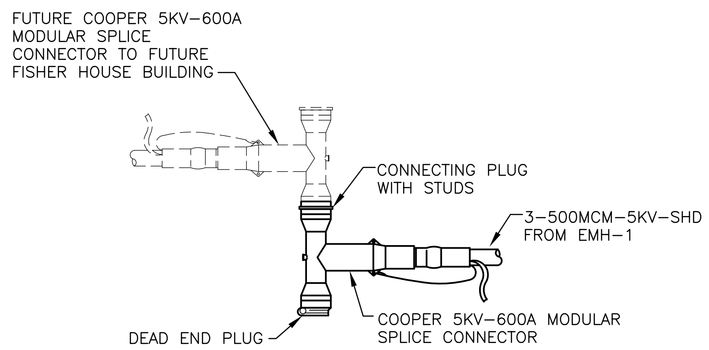

5 5KV Connector Detail (EMH-3)
SCALE: No Scale

FOR CONSTRUCTION
FULLY SPRINKLERED

Revisions:	Date

CONSULTANTS:

HDR Architecture, Inc.
1101 King Street | Suite 400 | Alexandria, Virginia 22314-2944 | 703.518.8500

ARCHITECT/ENGINEERS:

ARCHITECTURE ENGINEERING INTERIOR DESIGN DESIGN/BUILD
ASTORINO
227 Fort Pitt Boulevard Pittsburgh Pennsylvania 15222
TEL 412 765 1700 FAX 412 765 1711 www.astorino.com

Drawing Title	Electrical Details
Approved: Project Director	
Project Title	VA CARES CONSOLIDATION VAMC, PITTSBURGH, PA RESEARCH OFFICE BLDG.
Location	VAPHS UNIVERSITY DRIVE
Date	08-18-10
Checked	TMR
Drawn	LLG
Project Number	646CA2500R
Building Number	30
Drawing Number	EP7-104
Dwg. of	

Office of Facilities Management
Department of Veterans Affairs

VA FORM 08-6231, OCT 1978

P:\Project\20054250.00\CAD\UNIVERSITY DRIVE\Research Office Building\Electrical\EP7-104.dwg LGARDNER 10/29/09 10:39:56