SUNDIALER: I-CON STANDARD

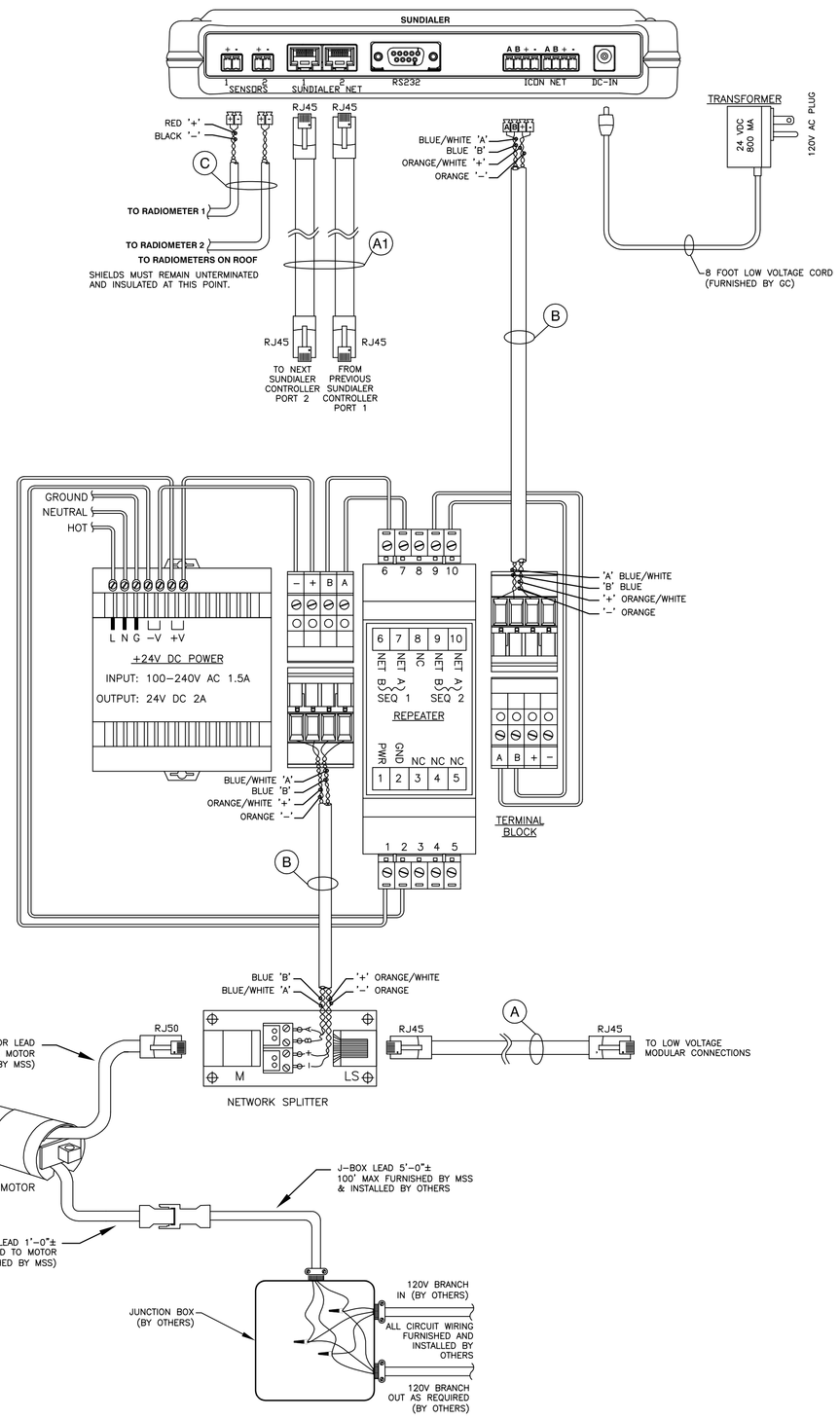

I-CON BUS SUPPLY/REPEATER

A) A BUS SUPPLY IS REQUIRED ON THE I-CON CONTROL NETWORK FOR EVERY 20 INTELLIGENT SWITCHES.

B) A REPEATER IS REQUIRED ON THE COMMUNICATIONS NETWORK EVERY 60 NODES (ICON BI OR ICON INTELLIGENT SWITCH)

C) A REPEATER IS REQUIRED FOR EVERY 1000 FT OF GREAT LAKES 70007 CABLE.

D) INSTALLED IN A 8"x8"x4" ELECTRICAL ENCLOSURE.

CRIMPING INSTRUCTIONS FOR SIX CONDUCTOR CABLES

LOW VOLTAGE CABLE
(FLAT MODULAR CABLE)

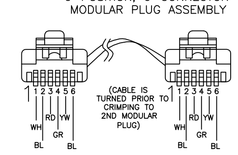

FLAT MODULAR CABLE CRIMP
PIN 1 – WHITE
PIN 2 – BLACK
PIN 3 – RED
PIN 4 – GREEN
PIN 5 – YELLOW
PIN 6 – BLUE

USOC CRIMPING INSTRUCTIONS FOR EIGHT CONDUCTOR CABLES

LOW VOLTAGE CABLE
(CAT5/CAT5E/CAT6 CABLE)

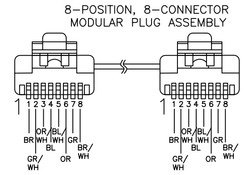

CATX CRIMP
PIN 1 – BROWN
PIN 2 – GREEN/WHITE
PIN 3 – ORANGE/WHITE
PIN 4 – BLUE
PIN 5 – BLUE/WHITE
PIN 6 – ORANGE
PIN 7 – GREEN
PIN 8 – BROWN/WHITE

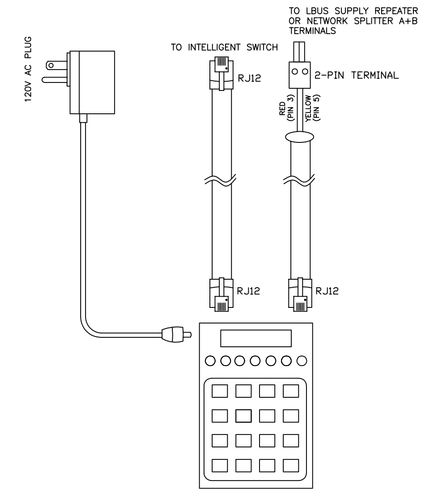

HAND HELD CONFIGURATOR

STANDARD ELECTRICAL NOTES

ALL ELECTRICAL-CONTROL EQUIPMENT (SWITCHES, MLCS, SACS, WACS, PHOTOCELLS, ANEMOMETERS, FTS UNITS, ETC.) AS INDICATED IS FURNISHED ONLY BY GENERAL CONTRACTOR, INSTALLED AND WIRED BY THE ELECTRICAL CONTRACTOR.

ALL ELECTRICAL-CONTROL EQUIPMENT MUST BE WIRED IN ACCORDANCE WITH THE WIRING DIAGRAMS PREPARED BY SYSTEM CONTRACTOR AND IN ACCORDANCE WITH THE N.E.C. AND LOCAL CODES.

EXCEPT FOR I-CON INTELLIGENT MOTOR AND / OR RTS MOTOR, PARALLEL AND/OR SERIES WIRING OF TWO OR MORE MOTORS ON SIMILAR POLES ON A SINGLE SWITCH OR ANY OTHER SIMILAR COMBINATION WILL VOID ANY APPLICABLE WARRANTY AND CAUSE PREMATURE MOTOR BURNOUT.

FOR I-CON INTELLIGENT MOTOR AND / OR RTS MOTOR, PARALLEL AND/OR SERIES WIRING IS ALLOWED UP TO MAXIMUM CIRCUIT CAPACITY

ALL WIRING DIAGRAMS HAVE BEEN PREPARED FOR RIGHT-HAND MOTORS, REGULAR ROLL OR LEFT-HAND MOTORS, REVERSE ROLL WHICH ARE WIRED SIMILARLY. RIGHT-HAND MOTORS, REVERSE ROLL AND LEFT-HAND MOTORS, REGULAR ROLL REQUIRE SWITCHING THE RED AND BLACK MOTOR WIRES AT THE MLC (MOTOR-LOGIC CONTROLLERS) OR THE SWITCH. THIS WILL PREVENT THE MOTORS FROM RUNNING IN OPPOSITE DIRECTIONS.

ALL CONTROL EQUIPMENT, SUCH AS MLCS (MOTOR-LOGIC CONTROLLERS), SACS/WACS (SUN-ACTIVATED CONTROLLERS/WIND ACTIVATED CONTROLLERS), AACS (ASTRONOMICAL CONTROLLERS), AND ALL EQUIPMENT THAT MAY HAVE A TRANSFORMER FOR LOW VOLTAGE MUST BE WIRED IN PHASE. IF NOT IN PHASE, PREMATURE TRANSFORMERS AND/OR MOTOR BURNOUT AND INCONSISTENT CONTROL OPERATION MAY OCCUR.

ELECTRICAL-CONTROL EQUIPMENT MAY CONTAIN ELECTROMECHANICAL RELAYS, ADJUSTMENT POINTS, FUSES, INDICATOR LIGHTS, AND OTHER DEVICES. THESE MUST BE CONVENIENTLY ACCESSIBLE FOR FUTURE SERVICING AND ADJUSTMENTS DURING NORMAL WORKING HOURS AND WITHOUT DISRUPTION TO THE EXISTING OPERATIONS. THIS EQUIPMENT SHALL BE CODED BY THE ELECTRICAL CONTRACTOR INDICATING SHADE LOCATIONS AND THE SPECIFIC MOTORS WHICH ARE CONTROLLED, AND IT SHALL BE CODED AT THE CONTROL EQUIPMENT AND CIRCUIT BREAKER. GREEN MOTOR WIRES ARE TO BE FASTENED TO GROUNDED JUNCTION BOXES, CONDUITS, OR ANOTHER SUITABLE BUILDING GROUND.

STANDARD (BI-DIRECTIONAL) MOTORS

THE STANDARD ELECTROSHADE -MOTOR LEAD IS A PVC 4 CONDUCTOR #18 STRANDED CABLE APPROXIMATELY ONE-FOOT (305MM) LONG WITH A 4 CONDUCTOR DISCONNECT-PLUG.

THE STANDARD ELECTROSHADE FURNISHED-ONLY JUNCTION-BOX LEAD IS THE SAME TYPE AS THE MOTOR LEAD AND HAS A PLUG COMPATIBLE TO IT. THIS LEAD IS APPROXIMATELY FIVE-FEET (1525 MM) LONG.

ONE OR TWO MOTORS CAN BE WIRED ON A SINGLE (DOUBLE-POLE, DOUBLE-THROW) SWITCH. PLEASE REFER TO DRAWING NO. M-160 FOR POINT-TO-POINT CONNECTION. HOWEVER, THREE OR FOUR MOTORS WIRED TO A SINGLE SWITCH REQUIRE THE USE OF AN MLC; FIVE TO EIGHT MOTORS REQUIRE TWO MLCS; NINE TO 12 REQUIRE THREE; AND SO FORTH. SEE DRAWINGS NO. M145 AND M146.

FTS MOTORS

THE STANDARD ELECTROSHADE -MOTOR LEAD IS A PVC 5 CONDUCTOR #18 STRANDED CABLE APPROXIMATELY ONE-FOOT (305MM) LONG WITH A 6 CONDUCTOR DISCONNECT-PLUG. THE STANDARD ELECTROSHADE FURNISHED-ONLY JUNCTION-BOX LEAD IS THE SAME TYPE AS THE MOTOR LEAD AND HAS A PLUG COMPATIBLE TO IT. THIS LEAD IS APPROXIMATELY FIVE-FEET (1525 MM) LONG.

ONE OR FOUR FTS SYSTEMS CAN BE WIRED ON A SINGLE PUSH-BUTTON SWITCH. PLEASE REFER TO DRAWING NO. EP7-107 FOR POINT-TO-POINT CONNECTION. HOWEVER, FOUR OR MORE FTS SYSTEMS WIRED TO A SINGLE SWITCH REQUIRE THE USE OF A SGC; FIVE TO EIGHT MOTORS REQUIRE ONE SGC; NINE TO 12 REQUIRE TWO; AND SO FORTH.

SOME POINT-TO-POINT WIRING DIAGRAMS MAY NOT INCLUDE MOTOR DISCONNECT-PLUGS, JUNCTION BOXES, AND CABLE RACEWAYS THAT MAY BE ESSENTIAL FOR A COMPLETE INSTALLATION.

TYPICAL ELECTRICAL RATING FOR STANDARD MOTORS:
MOTOR 120 VOLTS 60HZ 2.2 AMPS 246 WATTS

ACTUAL ELECTRICAL RATING IS JOB SPECIFIC AND IS BASED ON REQUIRED MOTOR AND SELECTED CONTROL SYSTEM.

CABLE LEGEND FOR I-CON SYSTEM

A	CAT5 – FOR LOW VOLTAGE DRY CONTACT CONNECTIONS 24AWG 4UTP (8-CONDUCTOR STRANDED UNSHIELDED TWISTED PAIR) OLYMPIC WIRE AND CABLE (www.olympicwire.com 1-800-526-2269) PART No. 3078M5FH. RJ-45 MODULAR PLUG CRIMPED (USOC) ON BOTH ENDS CAT5 – FOR LOW VOLTAGE DRY CONTACT CONNECTIONS IN PLENUM AREAS 24AWG 4UTP (8-CONDUCTOR SOLID UNSHIELDED TWISTED PAIR) OLYMPIC WIRE AND CABLE (www.olympicwire.com 1-800-526-2269) PART No. 3604M55 SOLID CONDUCTOR RJ-45 MODULAR PLUGS CRIMPED (USOC) ON BOTH ENDS DISTANCE LIMITATION = 400' CUMULATIVE (BY OTHERS)
A1	CAT5 – CABLE FOR RS-485 CONNECTIONS 24AWG 4UTP (8-CONDUCTOR STRANDED UNSHIELDED TWISTED PAIR) RJ-45 MODULAR PLUGS CRIMPED (EIA568A) ON BOTH ENDS CONNECTED TO 2'-0" USB CABLE (USB/RJ-45) DISTANCE LIMITATION = 4000' CUMULATIVE (BY OTHERS)
A2	CAT5 – CABLE FOR ETHERNET CONNECTIONS 24AWG 4UTP (8-CONDUCTOR STRANDED UNSHIELDED TWISTED PAIR) RJ-45 MODULAR PLUGS CRIMPED (EIA568A) ON BOTH ENDS DISTANCE LIMITATION = 8' (BY OTHERS)
A3	CAT5 – EXTENSION CABLE (E CABLE) CAT5- FOR LOW VOLTAGE DRY CONTACT CONNECTIONS 24AWG 4UTP (8-CONDULTOR STRANDED UNSHIELDED TWISTED PAIR) OLYMPIC WIRE AND CABLE (www.olympicwire.com 1-800-526-2269) PART No. 3078M5FH RJ-45 MODULAR PLUG CRIMPED (USOC) ON BOTH ENDS FOR PLENUM AREAS – 24AWG 4UTP (8-CONDUCTOR SOLID UNSHIELDED TWISTED PAIR) OLYMPIC WIRE AND CABLE (www.olympicwire.com 1-800-526-2269) PART No. 3604M55 SOLID CONDUCTOR RJ-45 MODULAR PLUGS CRIMPED (USOC) ON BOTH ENDS DISTANCE LIMITATION = 1500' INCLUSIVE OF LONWORKS/ICON NETWORK WIRING ("B") = 400' INCLUSIVE OF DRY CONTACT SWITCH WIRING ("A") (BY OTHERS)
B	LONWORKS CABLE – FOR I-CON NETWORK CONNECTIONS 22AWG 2UTP (4 CONDUCTOR STRANDED UNSHIELDED TWISTED PAIR) GREAT LAKES WIRE AND CABLE (www.greatwire.com -586-979-0022) PART # 70007-RIB-01, LEVEL 4 AUTOMATION CABLE PHOENIX PHOENIX TERMINAL CONNECTORS ON BOTH ENDS "-" = ORANGE "+" = ORANGE/WHITE "B" = BLUE "A" = BLUE/WHITE DISTANCE LIMITATION = 1500' CUMULATIVE = 1200' NODE TO NODE (BY OTHERS)
C	BELDEN TYPE 82760 18AWG 1STP (2-CONDUCTOR SHIELDED TWISTED PAIR) FOR PC INTERFACE/ANALOG I/O TO SENSOR CONNECTIONS PHOENIX CONNECTOR/CONNECTION "+" = RED "-" = BLACK '+' = BLUE/RED '-' = GREY/BLACK DISTANCE LIMITATION = 500' CUMULATIVE (BY OTHERS)
D	COAX – USES BNC TERMINATIONS FOR ANALOG I/O TO SENSOR CONNECTIONS TERMINAL BLOCK/WIRE SPLICE CONNECTION DISTANCE LIMITATION = 1000' CUMULATIVE (BY OTHERS)

NOTES

1. PARALLEL WIRING TO NEXT DEVICE PER BRANCH CIRCUIT CAPACITY. ALL CONNECTION MUST MEET NATIONAL AND LOCAL CODES AND REGULATIONS.
2. MAXIMUM VOLTAGE FOR ALL UNMARKED CABLE IS 43.5 VDC.

RADIOMETER
MOUNTED EXTERNALLY ON THE ROOF

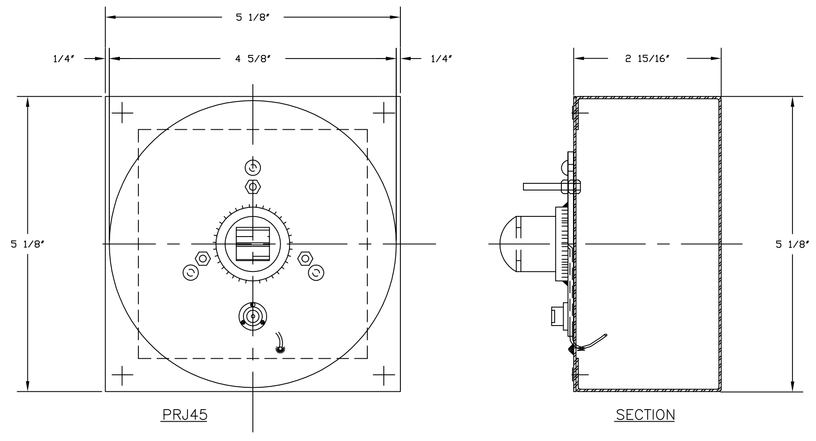

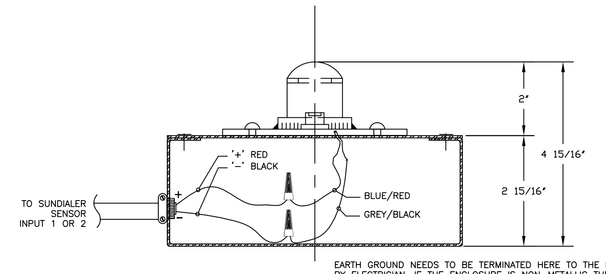

THE MK 1-C SOL-A-METER IS A WEATHERPROOF PYRANOMETER (FOR TOTAL RADIATION FROM BOTH SUN AND SKY). STANDARD SENSITIVITY IS 50MV PER CAL./CM. MIN. (2.5 OR 5MV PER CAL./CM. MIN. ON REQUEST). IMPENDENCE IS 1.0 OHM (0.05 AND 0.100HM FOR 2.5 AND 5.0MV RESPECTIVELY). BASE IS 5" IN DIAMETER. SHIPPING WEIGHT IS 1 1/2 LBS.

EARTH GROUND NEEDS TO BE TERMINATED HERE TO THE ENCLOSURE BY ELECTRICIAN. IF THE ENCLOSURE IS NON-METALLIC THEN THE SHIELD MUST TERMINATE TO EARTH GROUND WHICH SHOULD ADDITIONALLY TERMINATE TO PYRANOMETER/RADIOMETER BASE.

PLEASE NOTE:
A. RADIOMETER LOCATIONS TO BE EAST, SOUTH & WEST.
B. RADIOMETER TO BE MOUNTED CLEAR OF ANY SHADOWS.
C. RADIOMETER TO BE ROOF TOP MOUNTED.
D. BUBBLE FACING NORTH.

NOTE:
MAXIMUM LIMITATION OF 1500' TOTAL COMBINED OF B+C CABLING AND 1200' MAXIMUM BETWEEN ANY TWO DEVICES LINKED BY C OR B CABLING.

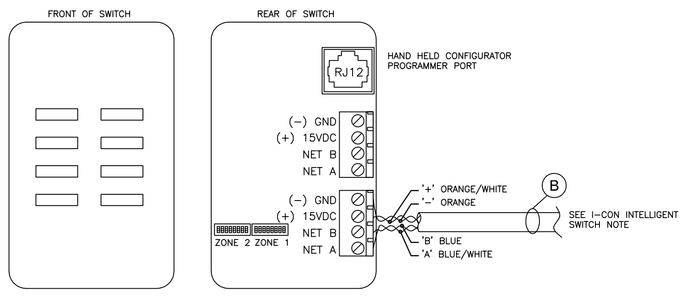

I-CON DUAL INTELLIGENT SWITCH

A) CAN BE CONNECTED AT BUS SUPPLY/REPEATER.

B) CAN BE CONNECTED AT A BUS INTERFACE (B.I.).

C) CAN BE CONNECTED ANYWHERE ALONG THE BUS LINE.

D) 15V POWER SUPPLY MUST BE PROVIDED IF NETWORK IS NOT CONNECTED TO A BUS SUPPLY/REPEATER.

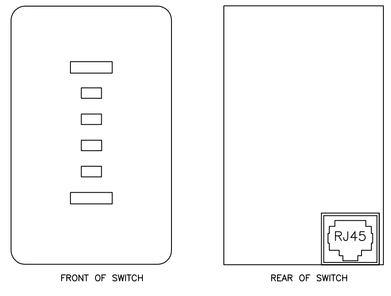

I-CON STANDARD SWITCH

1 Shade Details
SCALE: No Scale

FOR CONSTRUCTION
FULLY SPRINKLERED

Revisions:	Date

CONSULTANTS:

HDR Architecture, Inc.
1101 King Street | Suite 400 | Alexandria, Virginia 22314-2944 | 703.518.8500

ARCHITECT/ENGINEERS:

ARCHITECTURE ENGINEERING INTERIOR DESIGN DESIGN/BUILD
ASTORINO
227 Fort Pitt Boulevard Pittsburgh Pennsylvania 15222
TEL 412 765 1700 FAX 412 765 1711 www.astorino.com

Drawing Title	Electrical Details
Approved: Project Director	
Project Title	VA CARES CONSOLIDATION VAMC, PITTSBURGH, PA RESEARCH OFFICE BLDG.
Project Number	646CA2500R
Building Number	30
Location	VAPHS UNIVERSITY DRIVE
Date	08-18-10
Checked	TMR
Drawn	LLG
Drawing Number	EP7-105
Dwg. of	

Office of Facilities Management
Department of Veterans Affairs

VA FORM 08-6231, OCT 1978

P:\Project\20054250.00\CAD\UNIVERSITY DRIVE\Research Office Building\Electrical\EP7-104.dwg LGARDNER 10/29/09 - 10:39:56