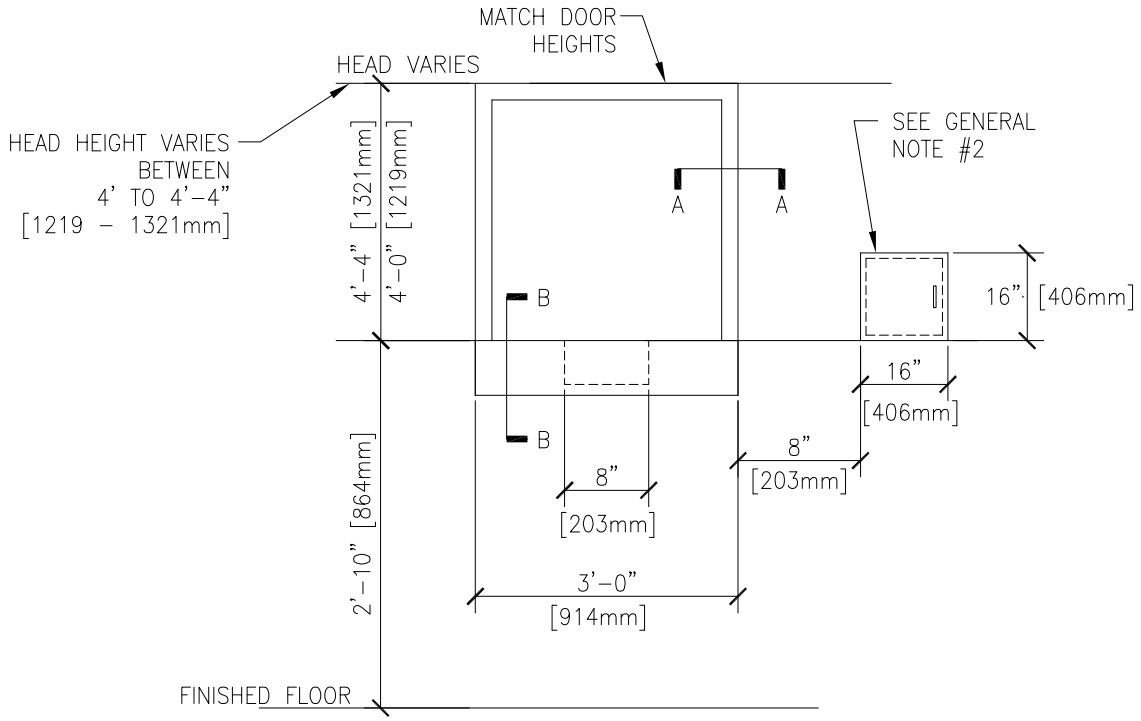

ELEVATION

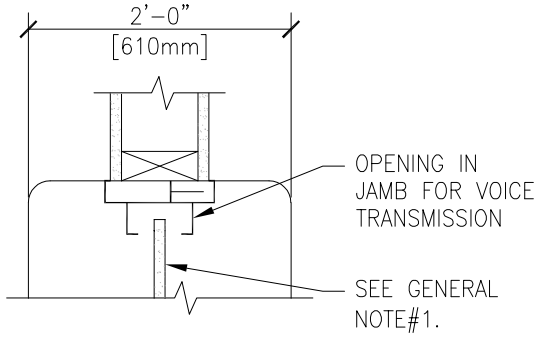

SECTION A (HEAD SIMILAR)

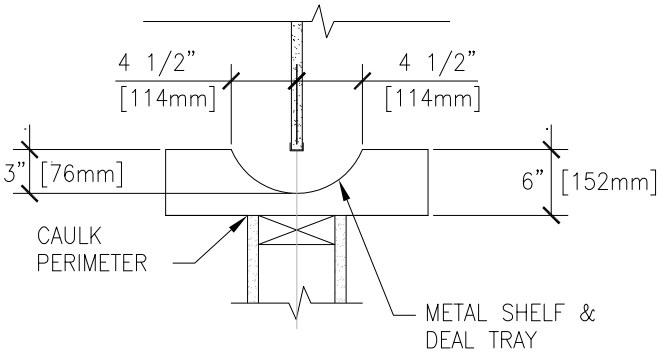

SECTION B

GENERAL NOTES:

1. SEE PHYSICAL SECURITY AND RESILIENCY DESIGN MANUAL (SECTION 5.12 PHARMACY) FOR ADDITIONAL DISPENSING PARTITIONS AND OPENINGS REQUIREMENTS.
2. PROVIDE AN INTERLOCK ON PACKAGE TRANSFER DOORS SO THAT BOTH DOORS CANNOT BE OPEN AT THE SAME TIME.

PHARMACY SERVICE WINDOW AND PACKAGE TRANSFER

#

NTS

VA | U.S. Department of Veterans Affairs

DETAIL TITLE / PHARMACY SERVICE WINDOW AND PACKAGE TRANSFER

SCALE: NONE

DATE ISSUED: JANUARY 1, 2021

SD085659-01.DWG