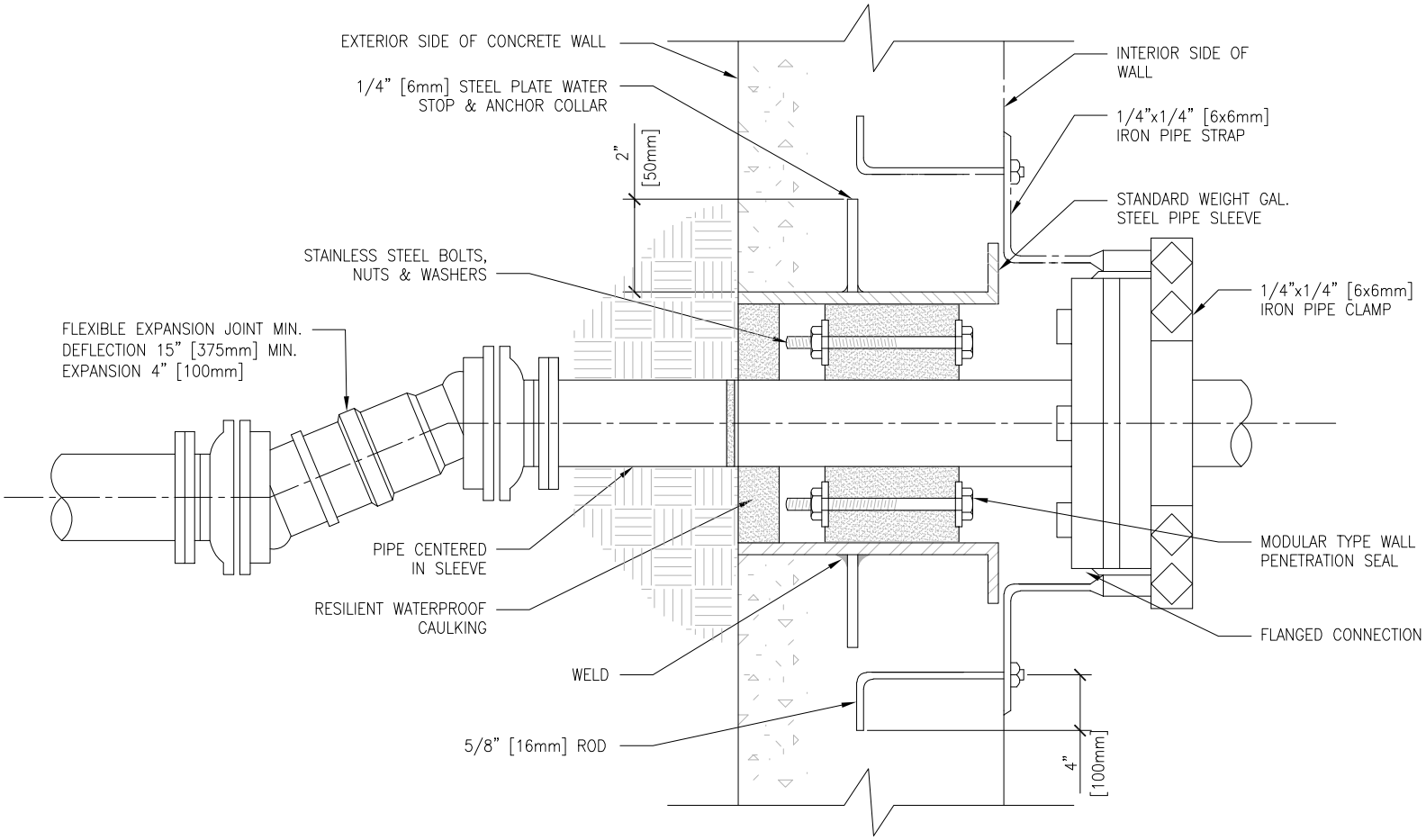

PIPE PENETRATION THROUGH WALLS BELOW GRADE

#

NTS

U.S. Department of Veterans Affairs

DETAIL TITLE / PIPE PENETRATION THROUGH WALLS BELOW GRADE

SCALE: NONE

DATE ISSUED: SEPTEMBER 1, 2020 CAD DETAIL NO.: SD220511-01.DWG