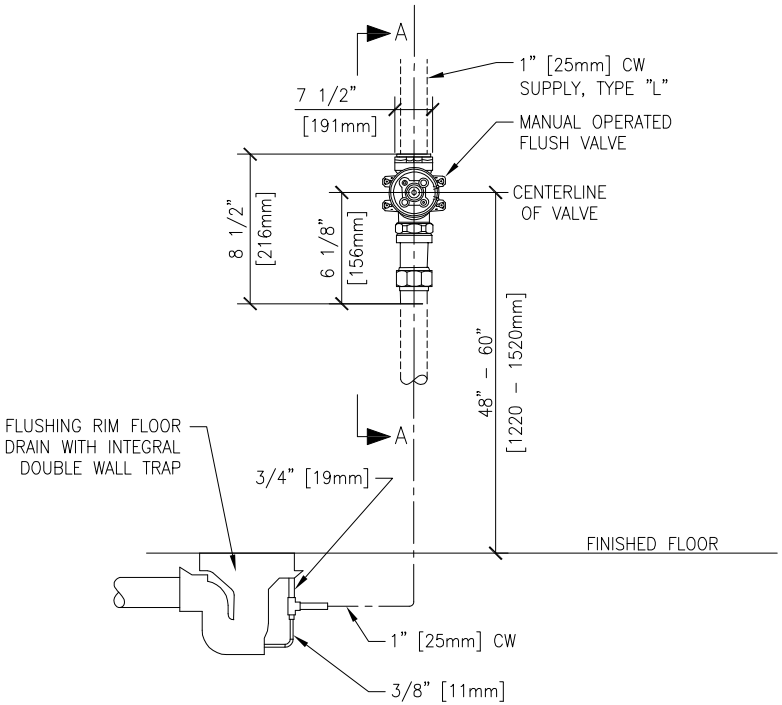

ELEVATION

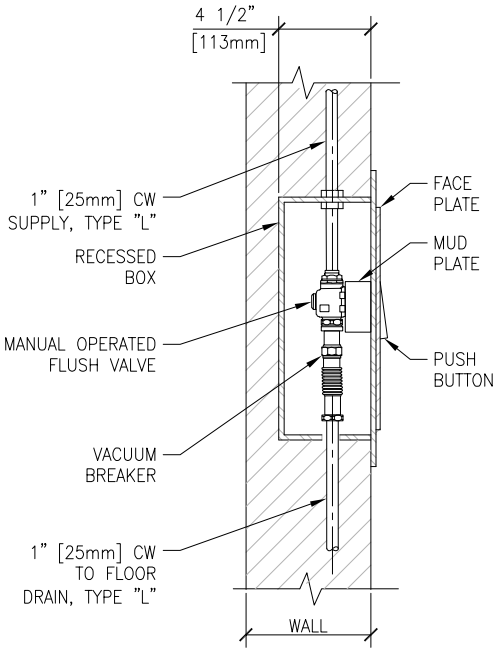

SECTION A

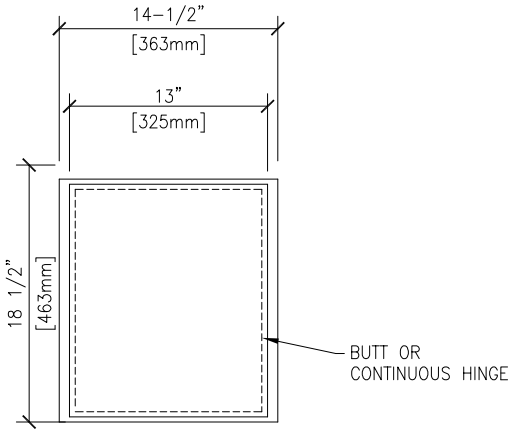

VALVE CABINET

FLUSHING RIM FLOOR DRAIN "L" CYSTOSCOPY ROOM

NTS

VA | U.S. Department of Veterans Affairs

DETAIL TITLE / FLUSHING RIM FLOOR DRAIN "L" CYSTOSCOPY ROOM

SCALE: NONE

DATE ISSUED: SEPTEMBER 1, 2020 CAD DETAIL NO.: SD221300-01.DWG