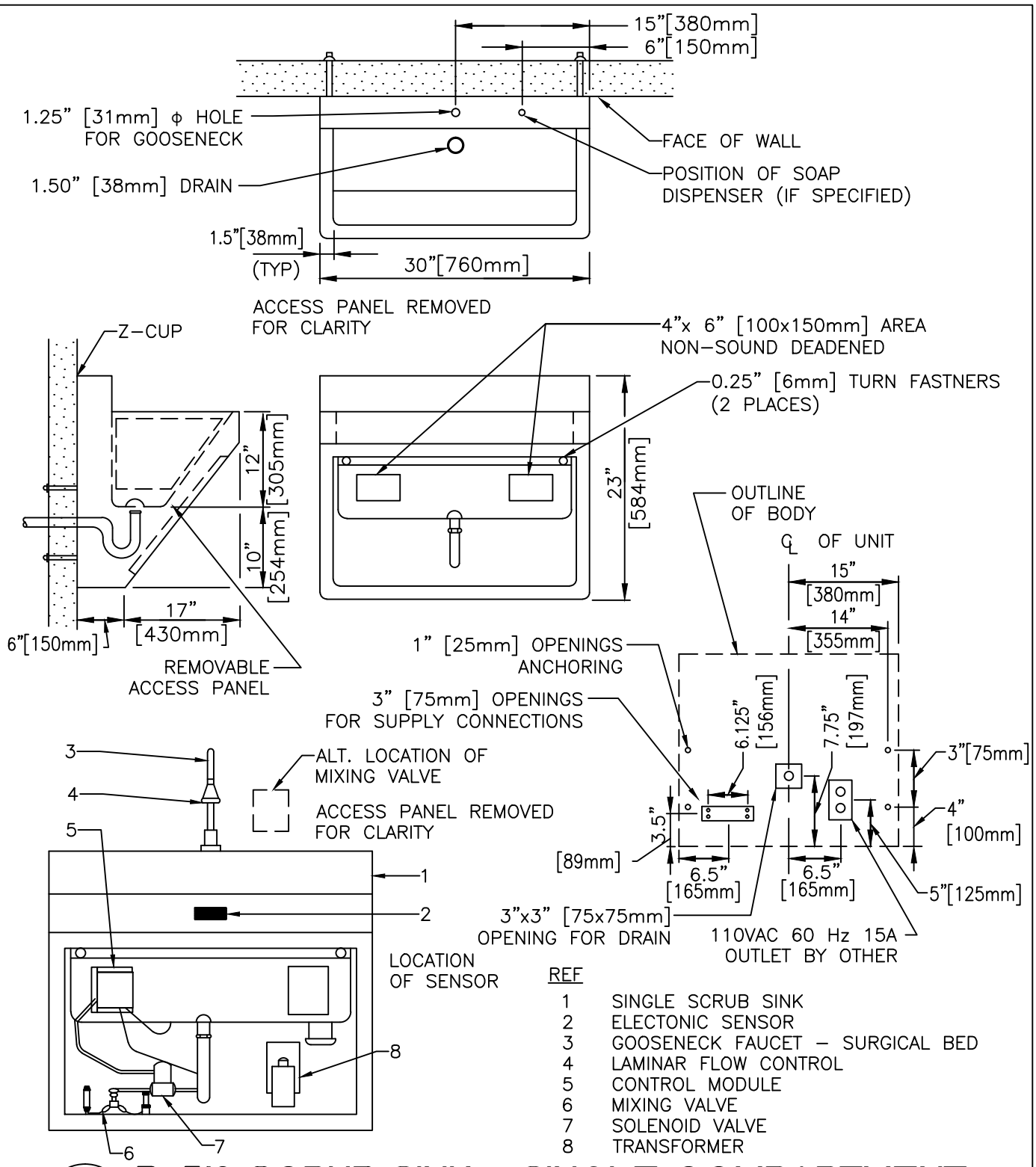

REF	
1	SINGLE SCRUB SINK
2	ELECTONIC SENSOR
3	GOOSENECK FAUCET – SURGICAL BED
4	LAMINAR FLOW CONTROL
5	CONTROL MODULE
6	MIXING VALVE
7	SOLENOID VALVE
8	TRANSFORMER

P-519 SCRUB SINK - SINGLE COMPARTMENT

NTS

VA U.S. Department of Veterans Affairs

DETAIL/TITLE: P-519 SCRUB SINK – SINGLE COMPARTMENT

SCALE: NONE

DATE ISSUED: FEBRUARY 2017 CADD DETAIL NO.: SD224000-10