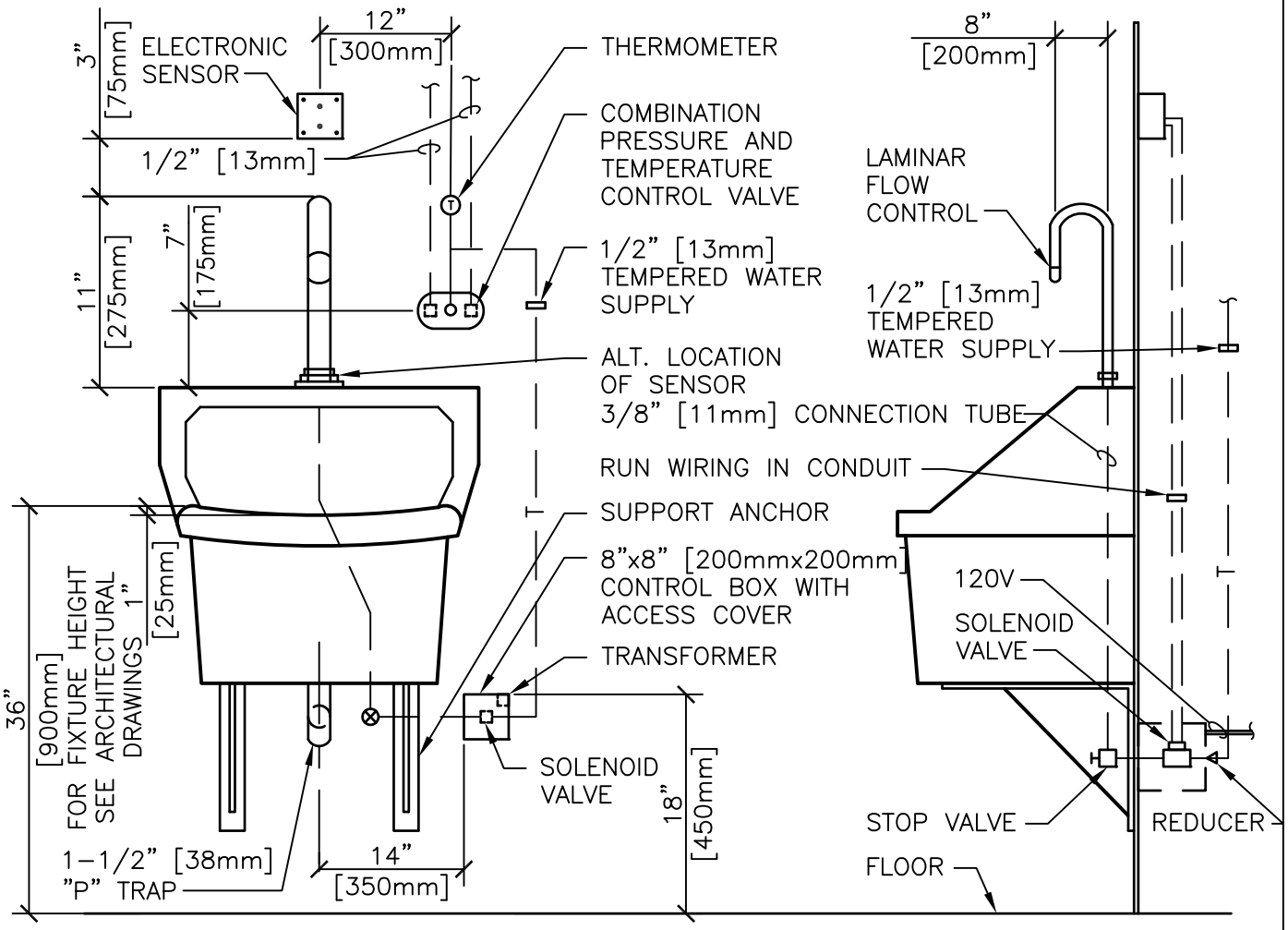

P-520 SURGEONS SCRUB SINK DETAIL

#

NTS

Department of Veterans Affairs

DETAIL TITLE / P-520 SURGEONS SCRUB SINK DETAIL

SCALE: NONE

DATE ISSUED: DECEMBER 1, 2015 CAD DETAIL NO.: SD224000-11.DWG