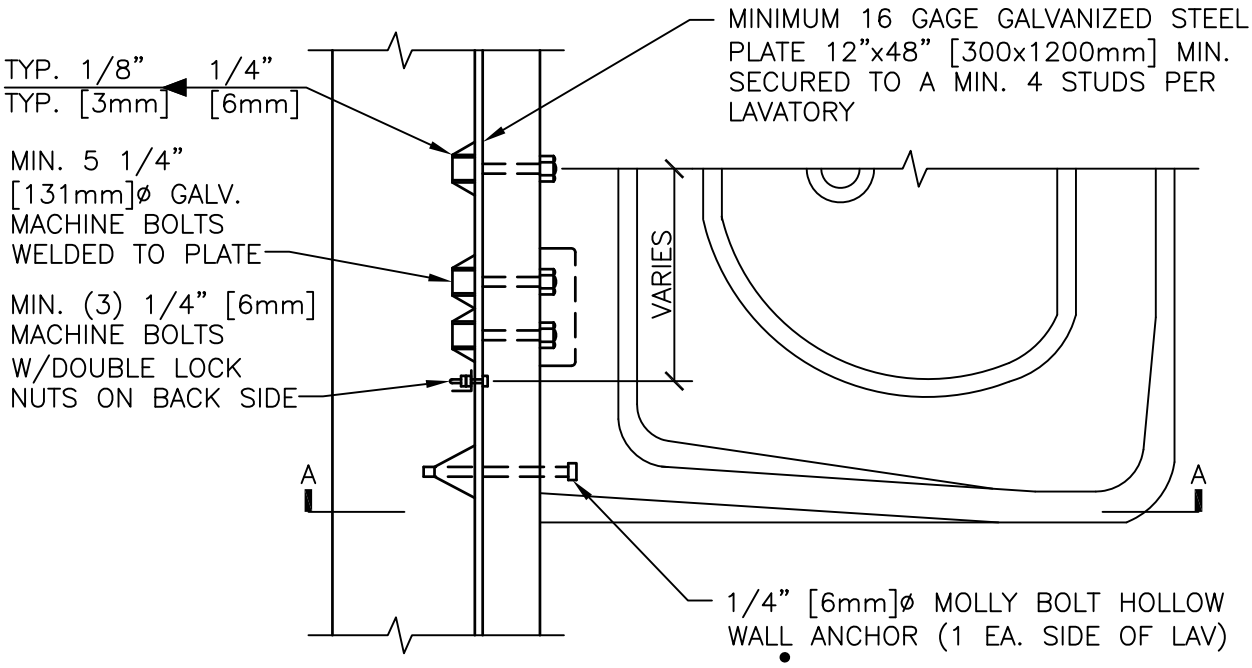

PLAN

NOTE:

1. AT LAVS WITH FOOT PEDAL CONTROLS PROVIDE AN ADDITIONAL 16 GAGE GALVANIZED STEEL PLATE 12"x16" [300x600mm] SECURED TO A MINIMUM OF 2 STUDS PER FOOT PEDAL.
2. PROVIDE 20 GAGE STUDS WHEN HEIGHT EXCEEDS 12'-0" [3600mm]

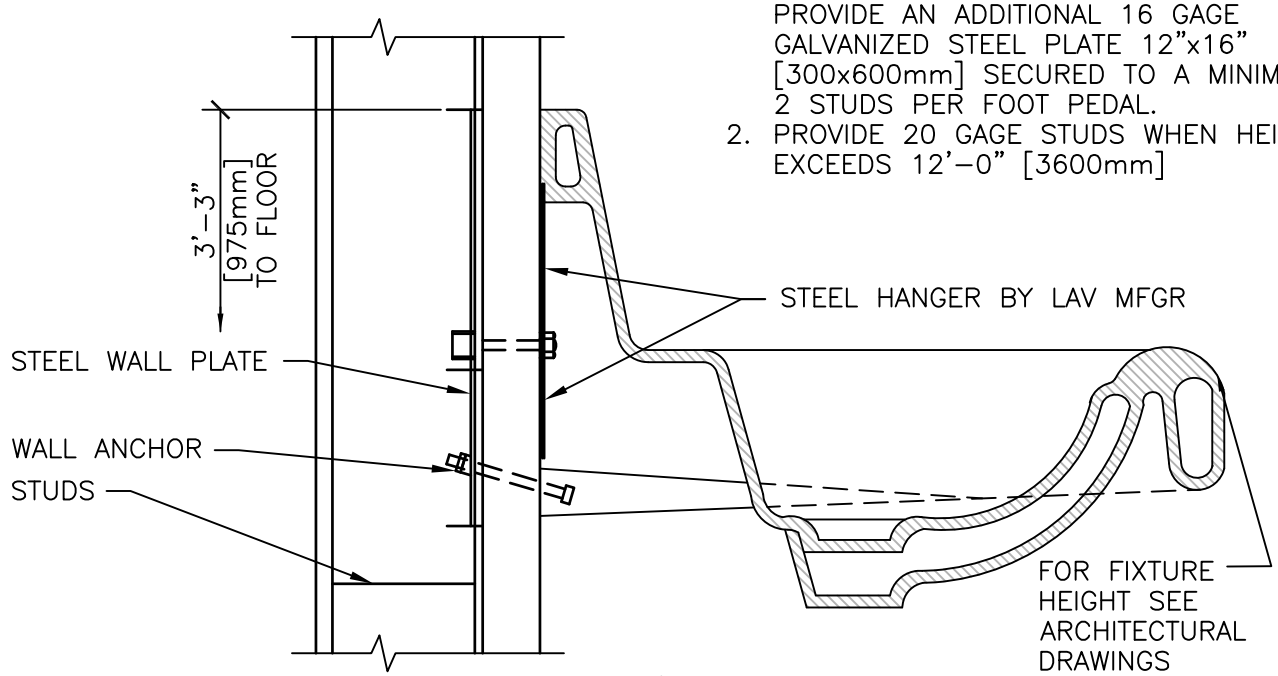

SECTION A

LAVATORY MOUNTING DETAIL

#

NTS

Department of Veterans Affairs

DETAIL TITLE / LAVATORY MOUNTING DETAIL

SCALE: NONE

DATE ISSUED: DECEMBER 1, 2015 CAD DETAIL NO.: SD224000-21.DWG