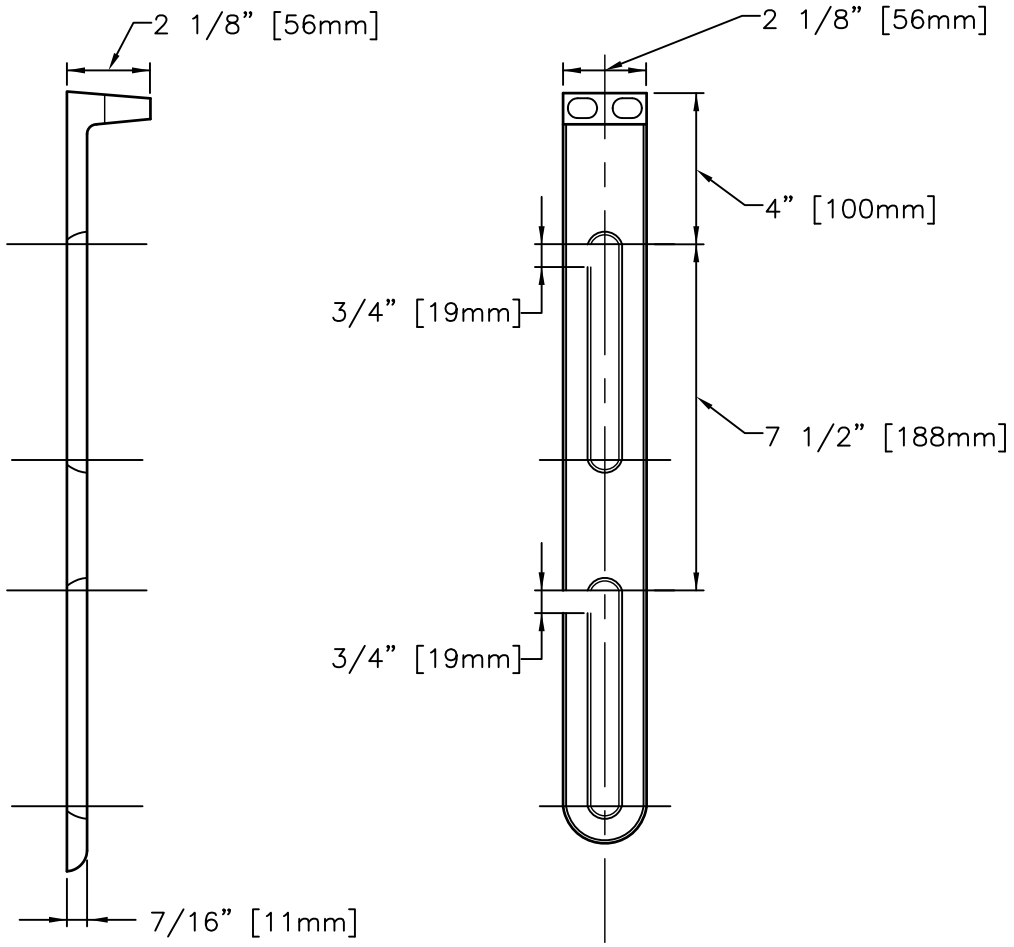

HANGER ROD SUPPORT FOOT

#

NTS

Department of Veterans Affairs

DETAIL TITLE / HANGER ROD SUPPORT FOOT

SCALE: NONE

DATE ISSUED: DECEMBER 1, 2015 CADD DETAIL NO. : SD224000-22.DWG