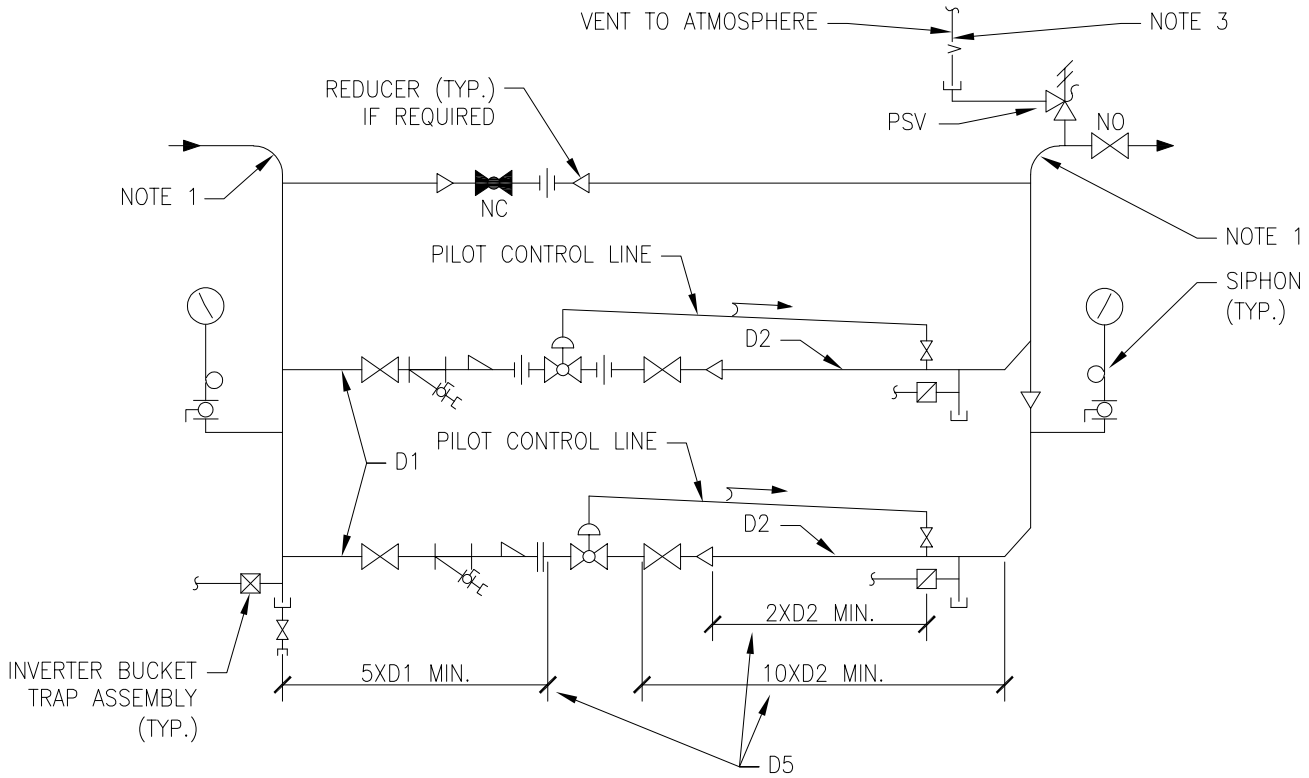

NOTES:

1. SEE FLOOR PLANS FOR PIPE SIZES.
2. SEE EQUIPMENT SCHEDULES FOR VALVE DATA AND PIPE SIZES D1 AND D2. INSTALL VALVES AS RECOMMENDED BY MANUFACTURER.
3. MAKE BYPASS VALVE DISCHARGE PIPE THE SAME SIZE AS D2 FOR THE LARGEST PRV.
4. PROVIDE NECESSARY UNIONS FOR THE REMOVAL OF VALVE WITH SCREWED CONNECTIONS.
5. SLOPE PILOT CONTROL LINE FROM PRESSURE REDUCING VALVE TO DOWN STREAM STEAM PIPING. MIMIMUM SLOPE SHALL BE 25'/100', 25mm/300mm [1"/12"]

DESIGNER'S NOTES:

D1 DESIGNATE LOWER VALVE A AND UPPER VALVE B (1-PRV1A, 1-PRV1B).
USE SYSTEM PRESSURE FOR 1-PRV1A AND SET PRESSURE 13.8kPa [2 PSIG] HIGHER

D2 USE DUAL VALVE PRESSURE REDUCING STATION WHEN THE MINIMUM LOAD IS 10% OR LESS THAN PEAK LOAD.

D3 SAFETY VALVES SHALL BE SIZED SO AS TO RELIEVE AT PRESSURES OF 35-70kPa [5-10 PSIG] IN EXCESS OF DELIVERED PRESSURES OF PRV'S AND TO HAVE A CAPACITY EQUAL TO THE MAXIMUM CAPACITY OF PRV IT IS TO RELIEVE. VENT PIPE SHALL BE NO LESS THAN ONE PIPE SIZE LARGER THAN SAFETY VALVE DISCHARGE AND SHALL FURTHER BE SIZED SO THAT FRICTIONAL RESISTANCE OR VENT DOES NOT EXCEED VELOCITY PRESSURE AT SAFETY VALVE OUTLET. VENTS FROM SAFETY VALVES SHALL RUN THE SHORTEST AND MOST DIRECT ROUTE TO OUTDOOR THRU THE ROOF. WHERE VENTS RUN IN FINISHED SPACE THEY SHALL BE FURRED IN TO MATCH ADJACENT BUILDING CONSTRUCTION; IN UNFINISHED SPACE, PIPE TO BE COVERED ONLY. SAFETY VALVES SHALL BE LOCATED AS SHOWN ON THE FLOOR PLANS.

D4 IF ELECTRONIC PRV'S ARE USED, REPLACE PILOT CONTROL LINE WITH ELECTRONIC PILOT ON THE PRV AND PROVIDE A PRESSURE TRANSDUCER DOWNSTREAM OF PRV.

D5 PIPE DIMENSIONS SHALL BE AS INDICATED IN CONTRACT DRAWINGS OR BY MANUFACTURER'S RECOMMENDATION.

D6 DELETE DESIGNER'S NOTE WHEN COMPLETED.

STEAM PRESSURE REDUCING STATION DOUBLE VALVE (1/3 AND 2/3)

#

NTS

VA | U.S. Department of Veterans Affairs

DETAIL TITLE / STEAM PRESSURE REDUCING STATION DOUBLE VALVE (1/3 AND 2/3)

SCALE: NONE

DATE ISSUED: NOVEMBER 1, 2020

SD232213-01 DWG