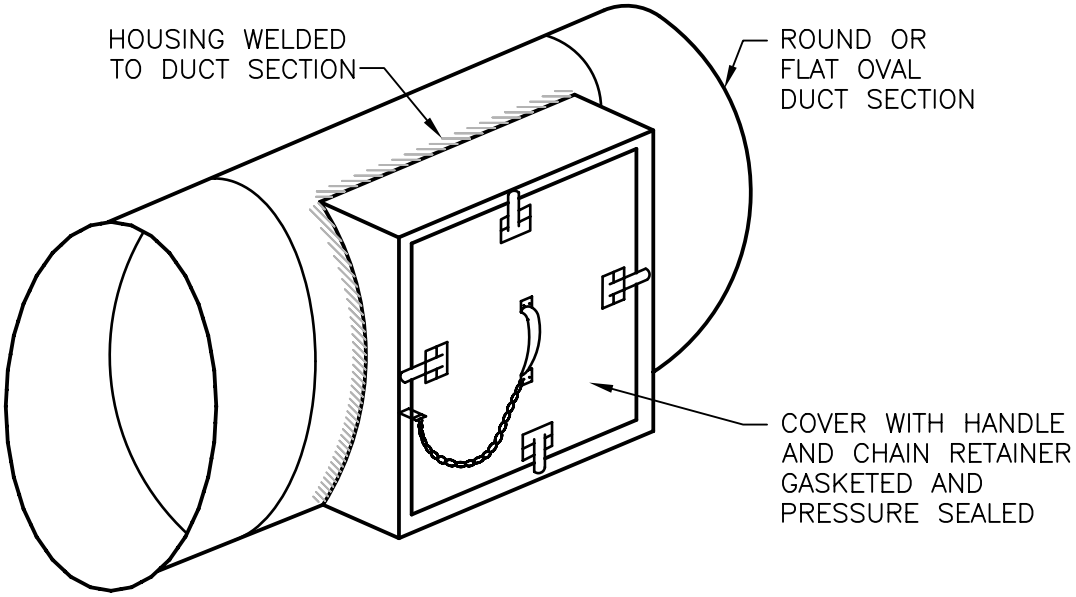

ACCESS SECTION FOR ROUND/OVAL DUCT

#

NTS

Department of Veterans Affairs

DETAIL TITLE / ACCESS SECTION FOR ROUND/OVAL DUCT

SCALE :NONE

DATE ISSUED: DECEMBER 2008 CAD DETAIL NO.: SD233100-10.DWG