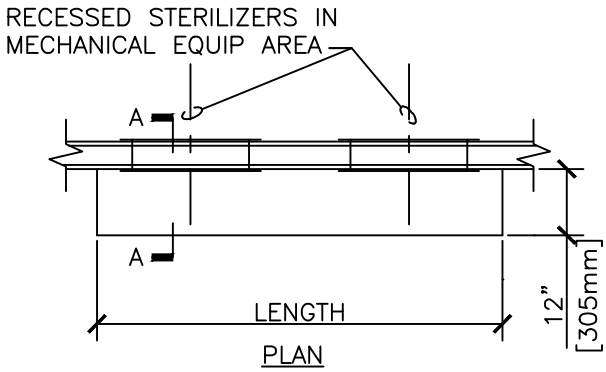

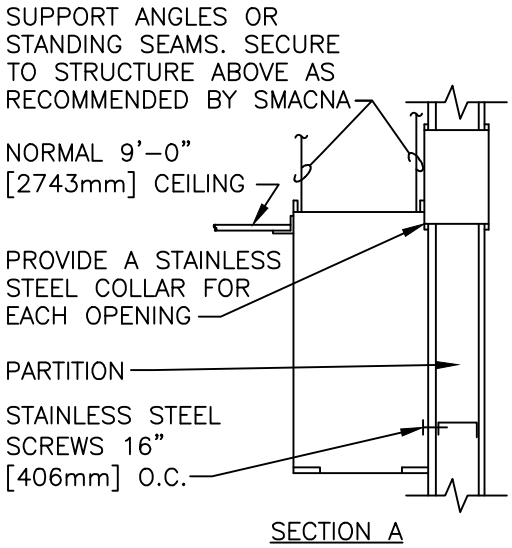

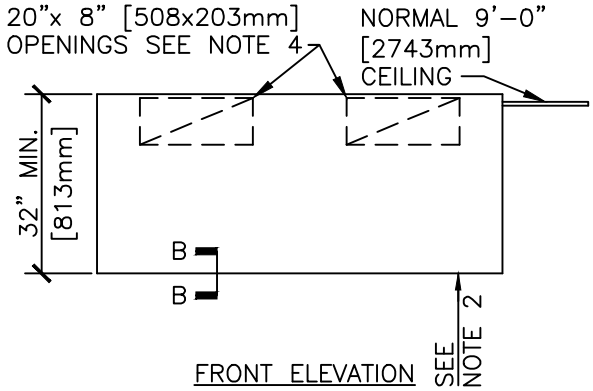

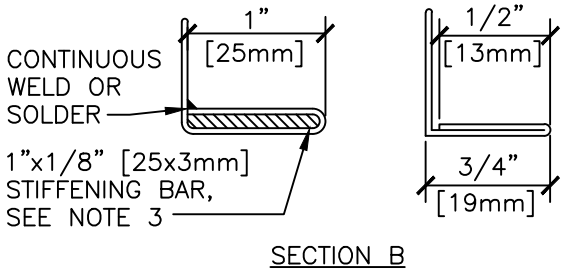

NOTE:

1. HOODS SHALL BE STAINLESS STEEL. SEE SPECIFICATIONS. FOR HOOD SIZES & LOCATIONS SEE EQUIPMENT SCHEDULE OR FLOOR PLANS.
2. HOODS SHALL BE 6'-6" [1981mm] ABOVE FINISHED FLOOR.
3. HOODS OVER 6'-0" [1828mm] LONG WITH 2 OR MORE SECTIONS SHALL HAVE INSIDE STANDING SEAM AND 1"x1/8" [25x3mm] STIFFENING BAR. SEE SECTION B.
4. PROVIDE A 20"x 8" [508x203mm] OPENING OVER EACH STERILIZER. LOCATE OPENING AS HIGH AS POSSIBLE IN HOOD, BUT BELOW CEILING IN MECHANICAL EQUIPMENT AREA IF ROOM HAS A CEILING.

HOOD TYPE "B"

NTS

VA | U.S. Department of Veterans Affairs

DETAIL/TITLE: HOOD TYPE "B"

SCALE: NONE

DATE ISSUED: FEBRUARY 2017 CADD DETAIL NO. : SD233100-20