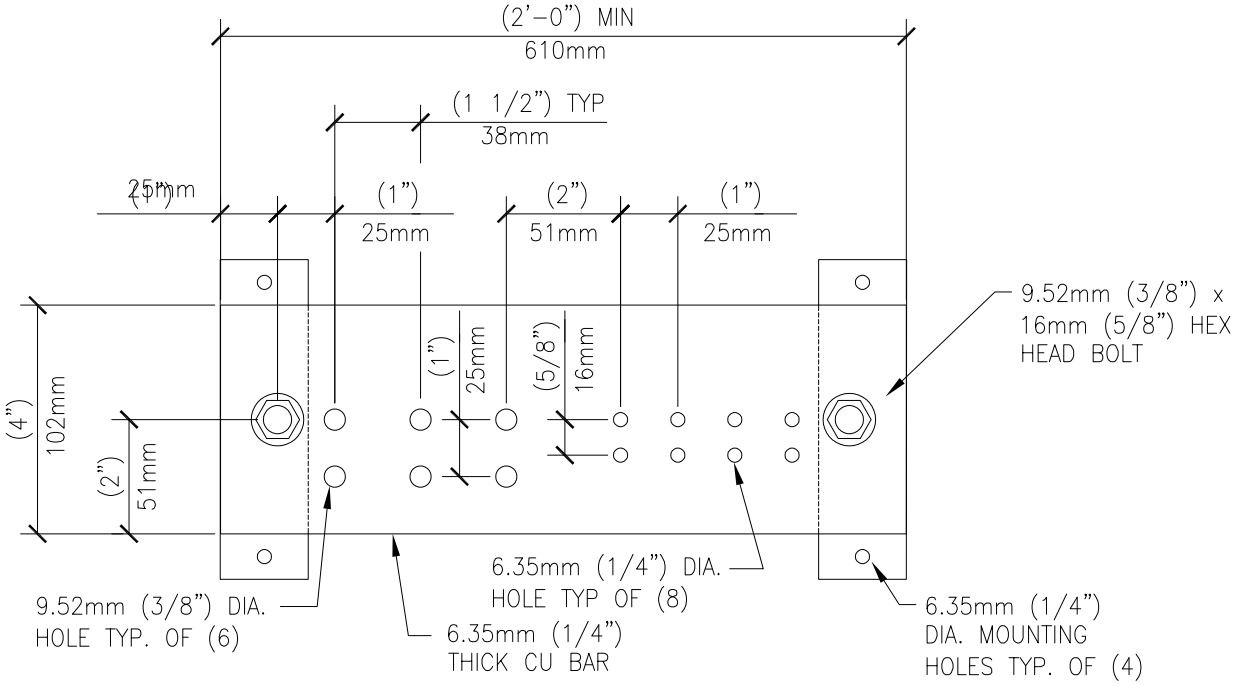

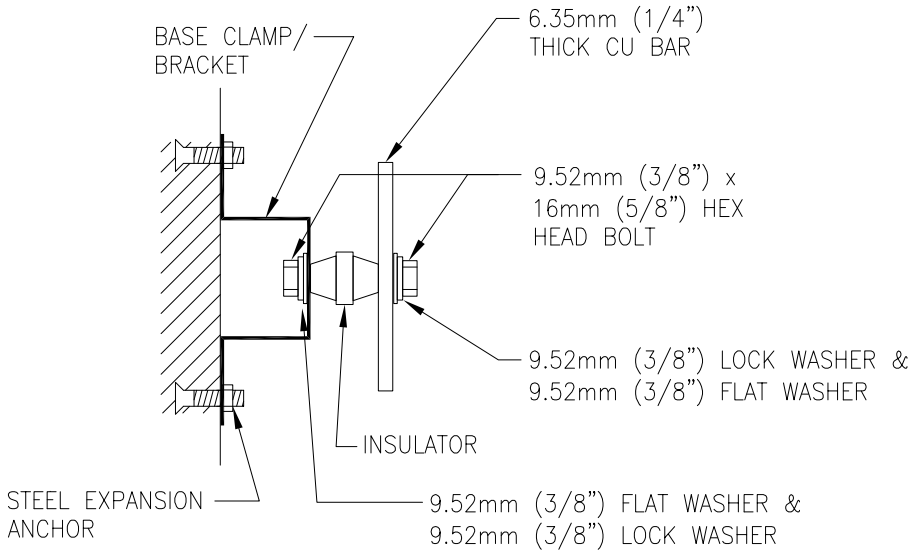

SECTION

GENERAL NOTES:

1. ALL HARDWARE SHALL BE STAINLESS STEEL.
2. PROVIDE 1 MOUNTING POINT PER 305mm (12") OF BAR LENGTH.
3. HOLES MAY BE ADDED IF REQUIRED.

GROUNDING BAR DETAIL

NTS

U.S. Department of Veterans Affairs

DETAIL TITLE / GROUNDING BAR DETAIL

SCALE: NONE

DATE ISSUED: JULY 1, 2020 CAD DETAIL NO.: SD260526-01.DWG