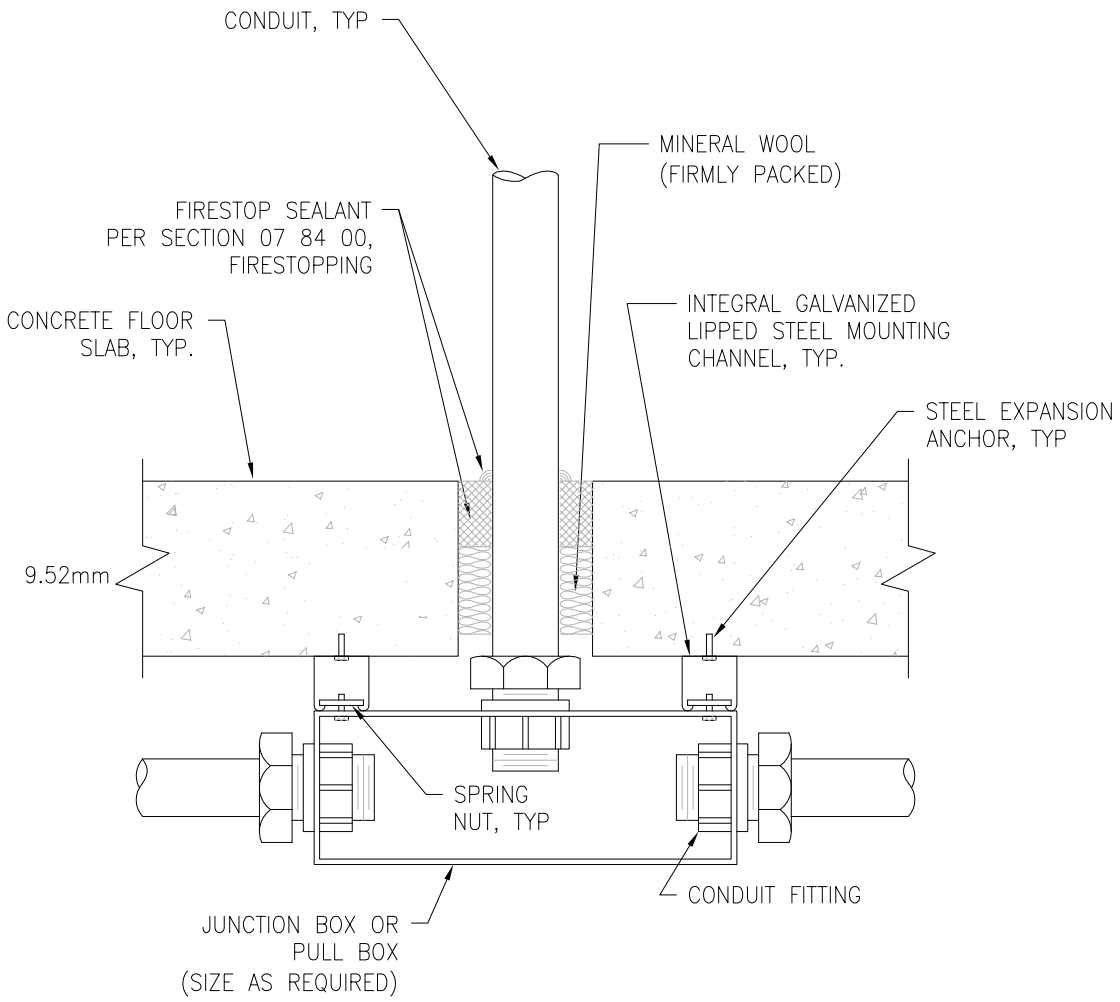

FLOOR SLAB PENETRATION DETAIL

#

NTS

U.S. Department of Veterans Affairs

DETAIL TITLE / FLOOR SLAB PENETRATION DETAIL

SCALE: NONE

DATE ISSUED: JULY 1, 2020

CAD DETAIL NO.: SD260539-01DWG