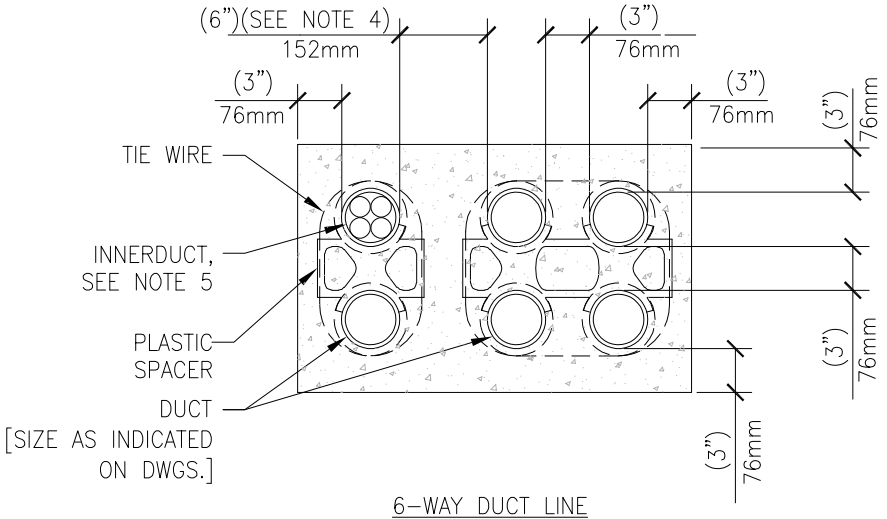

6–WAY DUCT LINE

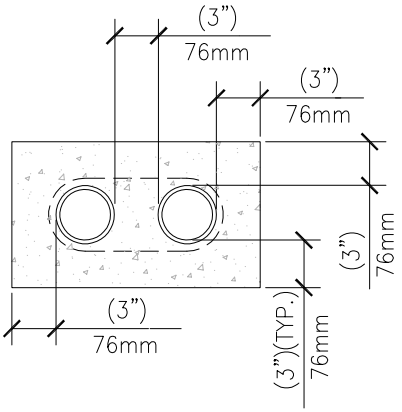

2–WAY DUCT LINE

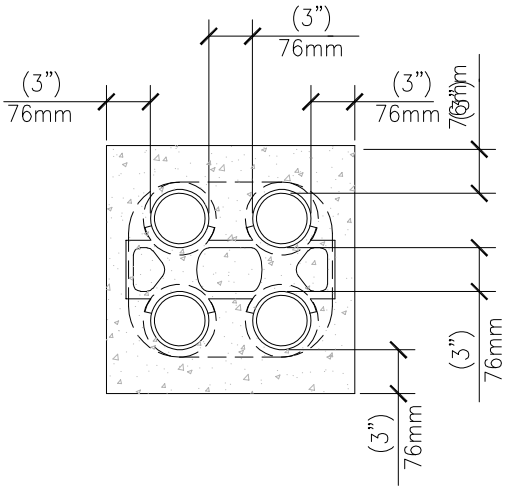

4–WAY DUCT LINE

GENERAL NOTES:

1. CONCRETE SHALL BE 2000 P.S.I. @ 28 DAYS, OR AS SPECIFIED.
2. PROVIDE #4 REINFORCING RODS ON TOP AND BOTTOM OF DUCTS WHEN CROSSING OR PLACED IN ROADWAYS.
3. MINIMUM COVER TO TOP OF ENVELOPE SHALL BE 610mm (24") OR AS OTHERWISE SPECIFIED IN SECTION 26 05 41.
4. PROVIDE MINIMUM 152mm (6") SPACE BETWEEN POWER AND TELECOMMUNICATION DUCTS. INCREASE SIZE AS REQUIRED.
5. INNERDUCT QUANTITY AND SIZE AS INDICATED ON PLANS.

DUCT BANK DETAILS

NTS

VA | U.S. Department of Veterans Affairs

DETAIL TITLE / DUCT BANK DETAIL

SCALE: NONE

DATE ISSUED: JULY 1, 2020 CAD DETAIL NO.: SD260541–02 DWG