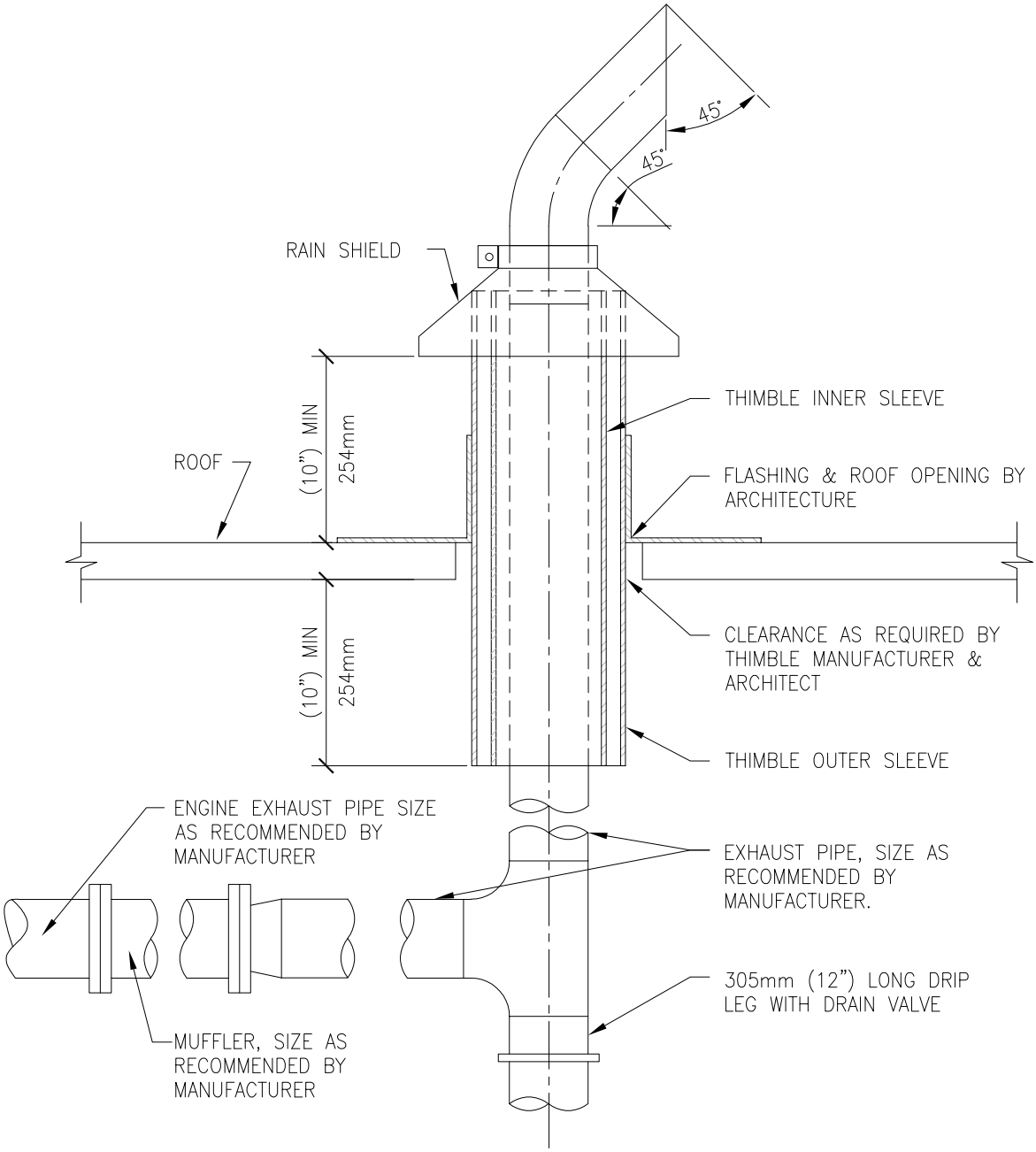


# EMERGENCY GENERATOR EXHAUST

#

NTS

U.S. Department of Veterans Affairs

DETAIL TITLE / EMERGENCY GENERATOR EXHAUST

SCALE: NONE

DATE ISSUED: JULY 1, 2020

CAD DETAIL NO.: SD263213-01 DWG