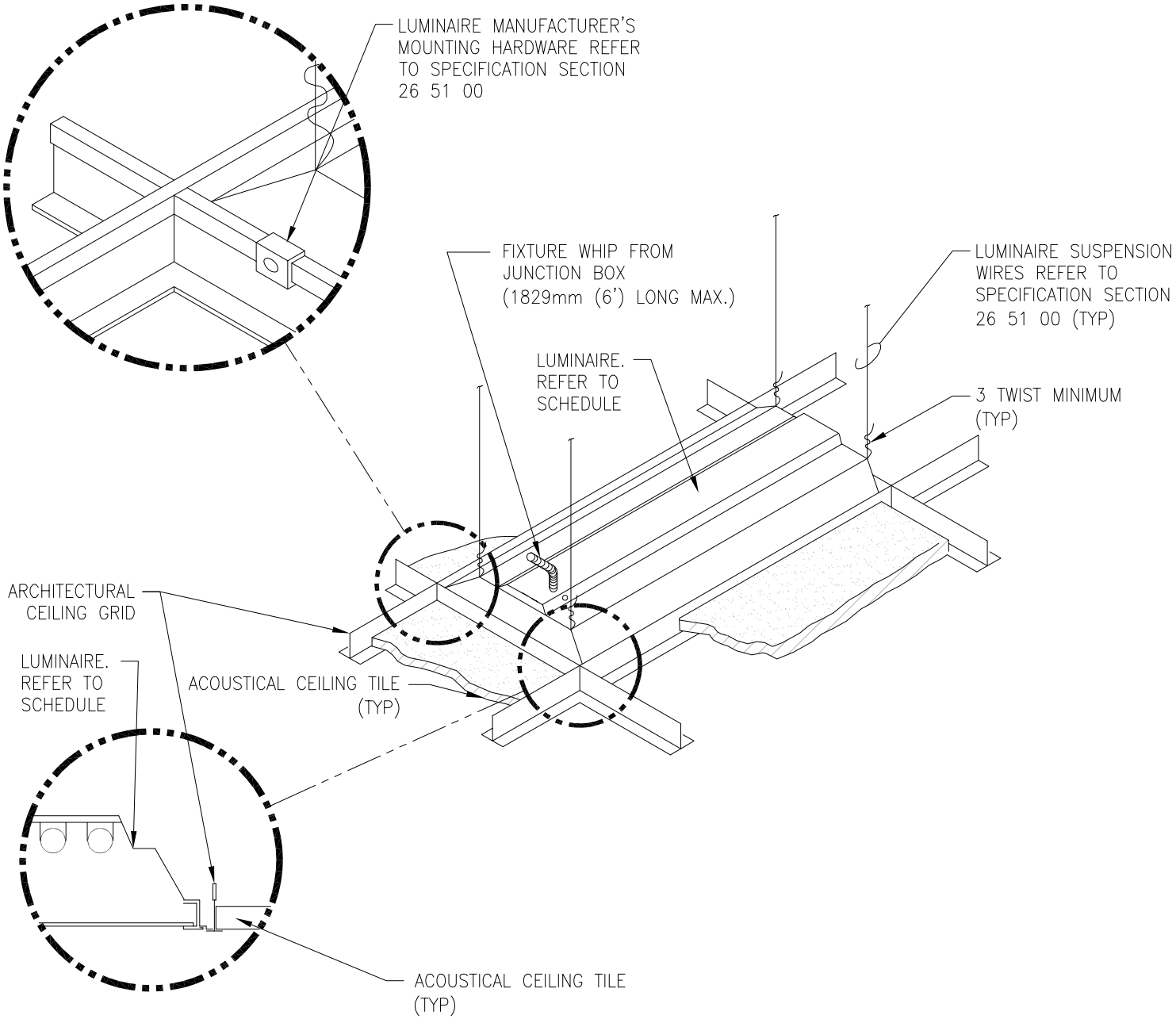

GENERAL NOTE:

1. INSTALL IN ACCORDANCE WITH MANUFACTURER'S MOUNTING INSTRUCTIONS AND USING THE RECOMMENDED MOUNTING HARDWARE.

LUMINAIRE MOUNTING - LAY-IN CEILING

NTS

U.S. Department of Veterans Affairs

DETAIL TITLE / LUMINAIRE MOUNTING - LAY-IN CEILING

SCALE: NONE

DATE ISSUED: JULY 1, 2020 CAD DETAIL NO.: SD265100-02 DWG