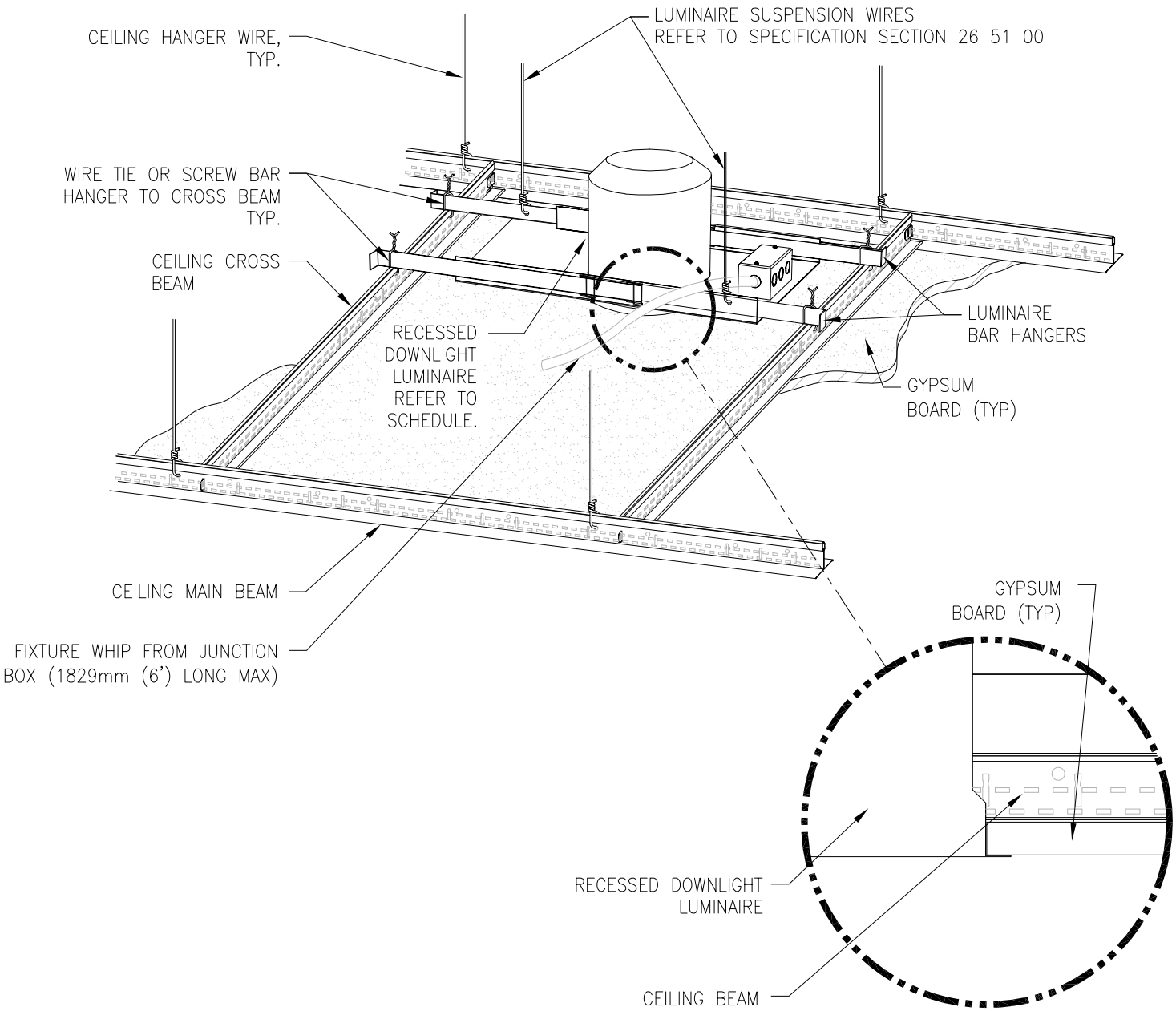

GENERAL NOTE:

1. INSTALL IN ACCORDANCE WITH MANUFACTURER'S MOUNTING INSTRUCTIONS AND USING THE RECOMMENDED MOUNTING HARDWARE.

DOWNLIGHT MOUNTING - GYPBOARD CEILING

#

NTS

VA | U.S. Department of Veterans Affairs

DETAIL TITLE / DOWNLIGHT MOUNTING - GYP BOARD CEILING

SCALE: NONE

DATE ISSUED: JULY 1, 2020 CAD DETAIL NO.: SD265100-03DWG