ELECTRICAL ABBREVIATIONS

1PH	SINGLE-PHASE
1P	SINGLE POLE
2/C	TWO-CONDUCTOR
3/C	THREE-CONDUCTOR
3PH	THREE-PHASE
4/C	FOUR-CONDUCTOR
4W	FOUR-WIRE
A/C UNIT	AIR CONDITIONING UNIT
A/E	ARCHITECT/ENGINEER
AAP	ALARM ANNUNCIATOR PANEL
AC	ALTERNATING CURRENT OR ARMORED CABLE
ACC	ACCESSIBLE
ADDL	ADDITIONAL
ADJ	ADJACENT, ADJOINING
AF	AMPERE FRAME OR AMP FUSE
AFC	ABOVE FINISHED COUNTER, AUTOMATIC FREQUENCY CONTROL, OR AVAILABLE FAULT CURRENT
AFCI	ARC-FAULT CURRENT INTERRUPTER
AFF	ABOVE FINISHED FLOOR
AFG	ABOVE FINISHED GRADE
Ah	AMPERE HOUR
AHJ	AUTHORITY HAVING JURISDICTION
AIC	AMPERE INTERRUPTING CAPACITY
ALT	ALTERNATE
AMB	AMBIENT
AMP	AMPERE
ARCH	ARCHITECT
ASC	AMPS SHORT CIRCUIT
AT	AMPERE TRIP
ATS	AUTOMATIC TRANSFER SWITCH
AUTO	AUTOMATIC
AV	AUDIO VISUAL
BAT	BATTERY
BD	BOARD
BFF	BELOW FINISH FLOOR
BLDG	BUILDING
BRKR	BREAKER
BYP	BY PASS

ELECTRICAL ABBREVIATIONS

C	CONDUIT
CAB	CABINET
CALC	CALCULATE
CAP	CAPACITY
CAT	CATALOG
CATV	COMMUNITY ANTENNA TELEVISION
CCR	CONTROL CONTACTOR
CCTV	CLOSED CIRCUIT TELEVISION
cd	CANDELA
CD	CONSTRUCTION DOCUMENTS
CF	CONTRACTOR FURNISHED
CF/CI	CONTRACTOR FURNISHED/CONTRACTOR INSTALLED
CF/OI	CONTRACTOR FURNISHED/OWNER INSTALLED
CFE	CONTRACTOR FURNISHED EQUIPMENT
CHW	CHILLED WATER
CHWP	CHILLED WATER PUMP
CKT	CIRCUIT
CKT BRKR OR C/B	CIRCUIT BREAKER
CLF	CURRENT LIMITING FUSE
CLG	CEILING
COAX	COAX CABLE
COMM	COMMUNICATION
COMPT	COMPARTMENT
CONC	CONCRETE
CONT	CONTINUE
CONTR	CONTRACTOR
COORD	COORDINATE
CPT	CONTROL POWER TRANSFORMER
CRI	COLOR RENDERING INDEX
CT	CURRENT TRANSFORMER
CTV	CABLE TELEVISION
CU	COPPER
CUR	CURRENT
dB	DECIBEL
DC	DIRECT CURRENT
DCP	DIMMER CONTROL PANEL
DEG C	DEGREES CELSIUS
DEG F	DEGREES FAHRENHEIT
DEMO	DEMOLITION
DIAG	DIAGRAM
DISC	DISCONNECT
DISTR PNL	DISTRIBUTION PANEL

VA | U.S. Department of Veterans Affairs

DETAIL TITLE / ELECTRICAL ABBREVIATIONS

SCALE: NONE

DATE ISSUED: JULY 1, 2020

CAD DETAIL NO.: SD260511-02 DWG

ELECTRICAL ABBREVIATIONS

DMR SW	DIMMER SWITCH
DPDT	DOUBLE POLE, DOUBLE THROW
DPST	DOUBLE POLE, SINGLE THROW
DRSW	DOOR SWITCH
DS	DISCONNECT SWITCH
DWG	DRAWING
EL	ELEVATION
ELEC	ELECTRIC OR ELECTRICAL
ELEV	ELEVATOR
EMER	EMERGENCY
EMI	ELECTROMAGNETIC INTERFERENCE
EMT	ELECTRICAL METALLIC TUBING
ENCL	ENCLOSURE
EPO	EMERGENCY POWER OFF
EPRF	EXPLOSION PROOF
ESMT	EASEMENT
EWC	ELECTRIC WATER COOLER
EWH	ELECTRIC WATER HEATER
EXIST OR (E)	EXISTING
FA	FIRE ALARM
FAAP	FIRE ALARM ANNUNCIATOR PANEL
FACP	FIRE ALARM CONTROL PANEL
FC	FOOTCANDLE
FIXT	FIXTURE
FLA	FULL LOAD AMPS
FLUOR	FLUORESCENT
FP	FIRE PROTECTION
FT	FEET OR FOOT
FU SW	FUSED SWITCH
FVNR	FULL VOLTAGE NON-REVERSING
FVR	FULL VOLTAGE REVERSING
G	ELECTRICAL GROUND
GEN	GENERATOR
GFCI	GROUND FAULT CIRCUIT INTERRUPTER
HID	HIGH INTENSITY DISCHARGE
HOA	HAND-OFF-AUTOMATIC
HP	HORSEPOWER
HT	HEIGHT
HZ	HERTZ

ELECTRICAL ABBREVIATIONS

IESNA	ILLUMINATION ENGINEERING SOCIETY OF NORTH AMERICA
IMC	INTERMEDIATE METAL CONDUIT
INCAND	INCANDESCENT
IR	INFRARED
IWH	INSTANTANEOUS WATER HEATER
J-BOX	JUNCTION BOX
kV	KILOVOLT
kVA	KILOVOLT AMPERE
kVAh	KILOVOLT AMPERE PER HOUR
kVAR	KILOVOLT AMPERE REACTIVE
kW	KILOWATT
kWh	KILOWATT HOUR
kWhM	KILOWATT HOUR METER
LED	LIGHT EMITTING DIODE
LF	LINEAR FEET (FOOT)
LP	LIGHT POLE
LPS	LOW PRESSURE SODIUM
LRA	LOCKED ROTOR AMPS
LT	LIGHT
LTG	LIGHTING
LTG PNL	LIGHTING PANEL
LTNG	LIGHTNING
LV	LOW VOLTAGE
MAX	MAXIMUM
MC	METAL-CLAD
MCA	MINIMUM CIRCUIT AMPS
MCB	MAIN CIRCUIT BREAKER
MCC	MOTOR CONTROL CENTER
MECH	MECHANICAL
MH	MANHOLE
MIN	MINIMUM
MOCP	MAXIMUM OVERCURRENT PROTECTION
MLO	MAIN LUGS ONLY
MT	MOUNT
MTD	MOUNTED
MTG	MOUNTING
MTS	MANUAL TRANSFER SWITCH
MV	MEDIUM VOLTAGE
MVA	MEGAVOLT-AMPERE
MW	MEGAWATT

ELECTRICAL ABBREVIATIONS

NA	NOT APPLICABLE
NC	NORMALLY CLOSED
NEC	NATIONAL ELECTRICAL CODE
NEMA	NATIONAL ELECTRICAL MANUFACTURERS ASSOCIATION
NEUT OR N	NEUTRAL
NFPA	NATIONAL FIRE PROTECTION ASSOCIATION
NIC	NOT IN CONTRACT
NL	NIGHT LIGHT
NO	NORMALLY OPEN
NTS	NOT TO SCALE
OC	ON CENTER
OD	OUTSIDE DIAMETER
OL	OVERLOAD
P	POLE
PB	PULL BOX
PEC	PHOTOELECTRIC CELL
PED	PEDESTAL
PEND	PENDANT
PF	POWER FACTOR
PH	PHASE
PNL	PANEL
PT	POTENTIAL TRANSFORMER
PVC	POLYVINYL CHLORIDE (PLASTIC)
PWR	POWER
RCP	REFLECTED CEILING PLAN
REC	RECESSED
RECPT	RECEPTACLE
RM	ROOM
RMS	ROOT MEAN SQUARE
REQD	REQUIRED
SCC	SHORT CIRCUIT CAPACITY
SD	SMOKE DETECTOR
SF	SQUARE FOOT (FEET)
SHT	SHEET
SI	INTERNATIONAL SYSTEM OF UNITS
SPEC	SPECIFICATION
SPST	SINGLE POLE, SINGLE THROW
SURF	SURFACE
SW	SWITCH

ELECTRICAL ABBREVIATIONS

SWBD	SWITCHBOARD
SWGR	SWITCHGEAR
TEL	TELEPHONE
TV	TELEVISION
TYP	TYPICAL
UFD	UNDERFLOOR DUCT
UGND	UNDERGROUND
UL	UNDERWRITERS LABORATORY
UON	UNLESS OTHERWISE NOTED
UPS	UNINTERRUPTIBLE POWER SUPPLY
UTIL	UTILITY
V	VOLT
VA	VOLT AMPERE
VAR	VOLT AMPERE REACTIVE
VFD	VARIABLE FREQUENCY DRIVE
VOLT	VOLTAGE
W	WATT
WH	WATER HEATER
WP	WEATHERPROOF
XFER	TRANSFER
XFMR	TRANSFORMER

ELECTRICAL SYMBOLS - DIAGRAM

DELTA CONNECTION

MOTOR, SINGLE-PHASE

MOTOR, THREE-PHASE

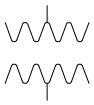
TRANSFORMER

WYE CONNECTION

EARTH GROUND

JUNCTION BOX

PULL BOX

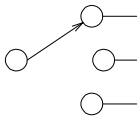
SWITCH, MULTIPOSITION

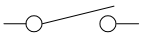
SWITCH, SINGLE BREAK

NORMALLY CLOSED RELAY CONTACT

NORMALLY OPEN RELAY CONTACT

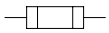
FUSE WITH RATING

CIRCUIT BREAKER

DRAWOUT AIR CIRCUIT BREAKER

RELAY; NUMBER INDICATES RELAY TYPE
50 = INSTANTANEOUS OVERCURRENT OR RATE-OF-RISE
51 = AC-TIME OVERCURRENT
67 = AC-DIRECTIONAL OVERCURRENT
86 = LOCKING OUT

VA | U.S. Department of Veterans Affairs

DETAIL TITLE / ELECTRICAL SYMBOLS - DIAGRAM

SCALE: NONE

DATE ISSUED: JULY 1, 2020

CAD DETAIL NO.: SD260511-07 DWG

ELECTRICAL SYMBOLS - DIAGRAM

	DISCONNECT SWITCH, FUSED
	DISCONNECT SWITCH, UNFUSED
	STARTER, COMBINATION WITH DISCONNECT SWITCH
	STARTER OR MOTOR CONTROLLER
G	GENERATOR, POWER
+ −	BATTERY
	CAPACITOR
M	METER
A	AMMETER
V	VOLTMETER
W	WATTMETER
WH	WATT–HOUR METER

VA | U.S. Department of Veterans Affairs

DETAIL TITLE / ELECTRICAL SYMBOLS - DIAGRAM

SCALE: NONE

DATE ISSUED: JULY 1, 2020

CAD DETAIL NO.: SD260511-08 DWG

ELECTRICAL SYMBOLS - POWER PLAN

MOTOR, SINGLE-PHASE

MOTOR, THREE-PHASE

T — TRANSFORMER, PLAN

WYE CONNECTION

DUCT, CELL FLOOR HEADER

T T — DUCT, TROLLEY

DUCT, UNDERFLOOR JUNCTION BOX

EARTH GROUND

J — JUNCTION BOX

C C — LADDER CABLE TRAY

BRANCH CIRCUIT HOMERUN. LINES INDICATE NUMBER OF CIR
NEUTRAL, AND SWITCH LEG CONDUCTORS. ONE SEPARATE GR
GROUNDING CONDUCTOR SHALL BE PROVIDED FOR EACH HOM
SHOWN

PB — PULL BOX

W W — WIREWAY

S — SUBSTATION

HVS — HI VOLTAGE SWITCH ON CONCRETE PAD

LVS — LOW VOLTAGE SWITCH ON CONCRETE PAD

B B — BUSWAY

PUSH BUTTON

VA | U.S. Department of Veterans Affairs

DETAIL TITLE / ELECTRICAL SYMBOLS-POWER PLAN

SCALE: NONE

DATE ISSUED: JULY 1, 2020 CAD DETAIL NO.: SD260511-09.DWG

ELECTRICAL SYMBOLS - POWER PLAN

DP#____ DISTRIBUTION PANEL

PANELBOARD, FLUSH MOUNTED

PANELBOARD, SURFACE MOUNTED

C RECEPTACLE, CLOCK HANGER

RECEPTACLE, DUPLEX

RECEPTACLE, DUPLEX ON EMERGENCY POWER

RECEPTACLE, DUPLEX WITH GROUND FAULT CIRCUIT IN

RECEPTACLE, QUADRAPLEX

RECEPTACLE, SINGLE

S RECEPTACLE, SINGLE WITH SWITCH

RECEPTACLE, SPECIAL PURPOSE
A = 120V, 20A, 1 PHASE, 2-POLE, 3W, NEMA 5-20
B = 208V, 20A, 1 PHASE, 2-POLE, 3W, NEMA 6-20
C = 120V, 30A, 1 PHASE, 2-POLE, 3W, NEMA 5-30
D = 208V, 30A, 1 PHASE, 2-POLE, 3W, NEMA 6-30
E = 208V, 60A, 1 PHASE, 3-POLE, 4W, NEMA 14-6
F = 208V, 30A, 3 PHASE, 3-POLE 4W, NEMA 15-30
G = 208V, 50A, 3 PHASE, 3 POLE, 4W, NEMA 15-3
H = 208V, 60A, 3 PHASE, 3 POLE, 4W, NEMA 15-6

S RECEPTACLE, SWITCHED DUPLEX

DROP CORD, SINGLE CONVENIENCE OUTLET, 3-WIRE, 20A, W/#12 CONDUCTORS IN FLEXIBLE CORD (CENTEF 6'-6" [1981mm] AFF. MINIMUM).

ELECTRICAL STRIP MOLD (OUTLETS ON 2'-0" [610mm DESIGNATED ON DRAWINGS), MTD 3'-6" [1067mm] AF INDICATED.

DISCONNECT SWITCH, FUSED

DISCONNECT SWITCH, UNFUSED

STARTER, COMBINATION WITH DISCONNECT SWITCH

VA U.S. Department of Veterans Affairs

DETAIL TITLE / ELECTRICAL SYMBOLS-POWER PLAN

SCALE: NONE

DATE ISSUED: JULY 1, 2020 CAD DETAIL NO.: SD260511-10.DWG

ELECTRICAL SYMBOLS - POWER PLAN

STARTER OR MOTOR CONTROLLER

$#

SWITCH

F = FUSED SWITCH
L = LOCK
M = MANUAL MOTOR STARTING
MP= MOTOR SNAP WITH PILOT LIGHT (THERMAL TYPE)
PB= PUSH BUTTON STATION
WP= WEATHER PROOF
K = KEY OPERATED
LM= LOW VOLTAGE MASTER
MC= MOMENTARY CONTACT
P = WITH PILOT LIGHT
RC= REMOTE CONTROL
X = EXPLOSION PROOF

VA | U.S. Department of Veterans Affairs

DETAIL TITLE / ELECTRICAL SYMBOLS-POWER PLAN

SCALE: NONE

DATE ISSUED: JULY 1, 2020 CAD DETAIL NO.: SD260511-11.DWG

ELECTRICAL SYMBOLS - LIGHTING PLAN

(P) SWITCH, CEILING MOUNTED PULL

$# SWITCH (# SUBSCRIPT AS INDICATED BELOW):

BLANK = SINGLE POLE	2 = DOUBLE POLE
3 = THREE-WAY	4 = FOUR-WAY
D = DIMMER	K = KEY OPERATED
LV= LOW VOLTAGE	P = WITH PILOT LIGHT
LM= LOW VOLTAGE MASTER	RC= REMOTE CONTROL
PB= PUSH BUTTON STATION	WP= WEATHER PROOF
T = TIMER OPERATED	Mo= OCCUPANCY SENSOR

(A) RECESSED DOWNLIGHT FIXTURE, LETTER INDICATES TYPE.

(A) LIGHT FIXTURE, RECESSED, 610x1220mm (2'x4'); LETTER INDICATES TYPE.

(B) LIGHT FIXTURE, RECESSED, 305x1220mm (1'x4'); LETTER INDICATES TYPE.

(C) LIGHT FIXTURE, RECESSED, 305x2439mm (1'x8'); LETTER INDICATES TYPE.

(A) LIGHT FIXTURE, SURFACE MOUNTED, 610x1220mm (2'x4'); LETTER INDICATES TYPE.

(B) LIGHT FIXTURE, SURFACE MOUNTED, 305x1220mm (1'x4'); LETTER INDICATES TYPE.

(C) LIGHT FIXTURE, SURFACE MOUNTED, 305x2439mm (1'x8'); LETTER INDICATES TYPE.

(D) LIGHT FIXTURE, EMERGENCY; LETTER INDICATES TYPE.

(E) LIGHT FIXTURE, RECESSED, 610x610mm (2'x2'); LETTER INDICATES TYPE.

ELECTRICAL SYMBOLS - LIGHTING PLAN

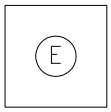

LIGHT FIXTURE, SURFACE MOUNTED, 2'x2' [610x610mm]; LETTER INDICATES TYPE.

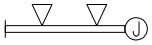

LIGHT TRACK WITH HEADS AS SHOWN

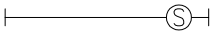

LIGHT FIXTURE, STRIP; LETTER INDICATES TYPE.

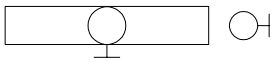

LIGHT FIXTURE, WALL MOUNTED

LIGHTING, ONE HEAD EMERGENCY BATTERY POWER

LIGHTING, TWO HEAD EMERGENCY BATTERY POWER

LIGHTING, THREE HEAD EMERGENCY BATTERY POWER

STREET LIGHT WITH BRACKET

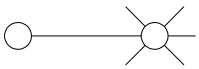

LIGHT POLE, ONE LUMINAIRE

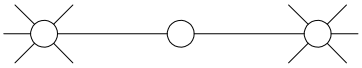

LIGHT POLE, TWO LUMINAIRES

LIGHT POLE, POST TOP MOUNT LUMINAIRE

LIGHTING WALL PACK, EXTERIOR BUILDING

EXIT SIGN, WALL MOUNTED WITH DIRECTIONAL ARROWS AND FACES AS SHOWN

EXIT SIGN, CEILING MOUNTED WITH DIRECTIONAL ARROWS AND FACES AS SHOWN

LIGHT FIXTURE, BOLLARD

VA | U.S. Department of Veterans Affairs

DETAIL TITLE / ELECTRICAL SYMBOLS-LIGHTING PLAN

SCALE: NONE

DATE ISSUED: JULY 1, 2020 CAD DETAIL NO.: SD260511-13.DWG

GENERAL NOTES

A. ALL FINAL LOCATIONS AND ARRANGEMENTS OF LIGHTING FIXTURES SHALL BE OBTAINED FROM THE ARCHITECTURAL REFLECTED CEILING PLAN.

B. LIGHTING FIXTURES WITH MORE THAN TWO LAMPS SHALL HAVE TWO OUTER LAMPS CONTROLLED WITH ONE SWITCH AND INNER LAMP(S) CONTROLLED BY A SECOND SWITCH.

C. EACH BRANCH CIRCUIT HOMERUN SHALL HAVE NO MORE THAN THREE CIRCUITS. EACH BRANCH CIRCUIT HOMERUN SHALL HAVE A SEPARATE GREEN INSULATED EQUIPMENT GROUNDING CONDUCTOR.

D. MULTI-GANG BACKBOXES FOR DIFFERENT VOLTAGES AND TYPES OF EMERGENCY AND NORMAL BRANCH WIRING DEVICES SHALL HAVE DIVIDERS BETWEEN DEVICES.

GENERAL NOTES - DEMOLITION

A. FOR EXISTING EQUIPMENT, SUCH AS LIGHTING FIXTURES, WIRING DEVICES, CONDUITS, ETC., SHOWN ON PLANS TO BE REMOVED, COMPLETELY CUT/CAP CONDUITS AT THE AREA OF WORK PERIMETER AND REMOVE CONDUIT WITHIN THE WORK AREA, DISCONNECT WIRING AT THE OVERCURRENT PROTECTIVE DEVICE AND REMOVE WIRING COMPLETELY FROM THE ABANDONED CONDUITS.

B. DISCONNECT ALL ABANDONED WIRING OF ALL TYPES AT THE OVERCURRENT PROTECTIVE DEVICE. COMPLETELY REMOVE ALL ABANDONED WIRING.

C. MAINTAIN AND RESTORE, IF INTERRUPTED, ALL CONDUITS AND CONDUCTORS PASSING THROUGH RENOVATED AREAS AND SERVICING UNDISTURBED AREAS.

GENERAL AND DEMOLITION NOTES

NTS

VA | U.S. Department of Veterans Affairs

DETAIL TITLE / GENERAL AND DEMOLITION NOTES

SCALE: NONE

DATE ISSUED: JULY 1, 2020 CAD DETAIL NO.: SD260511-14.DWG

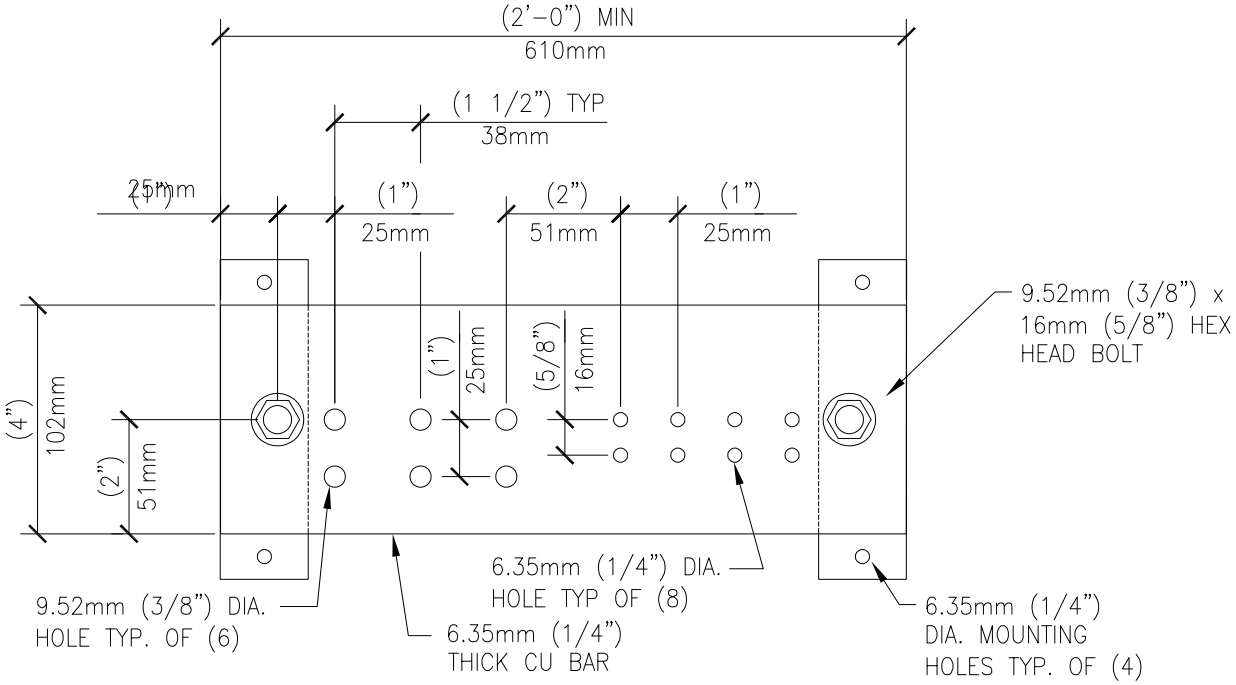

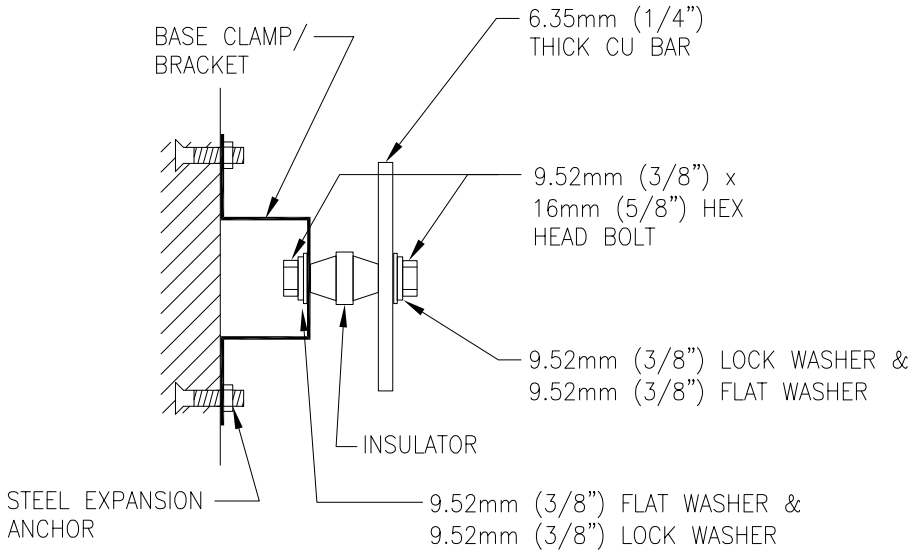

SECTION

GENERAL NOTES:

1. ALL HARDWARE SHALL BE STAINLESS STEEL.
2. PROVIDE 1 MOUNTING POINT PER 305mm (12") OF BAR LENGTH.
3. HOLES MAY BE ADDED IF REQUIRED.

GROUNDING BAR DETAIL

NTS

U.S. Department of Veterans Affairs

DETAIL TITLE / GROUNDING BAR DETAIL

SCALE: NONE

DATE ISSUED: JULY 1, 2020 CAD DETAIL NO.: SD260526-01.DWG

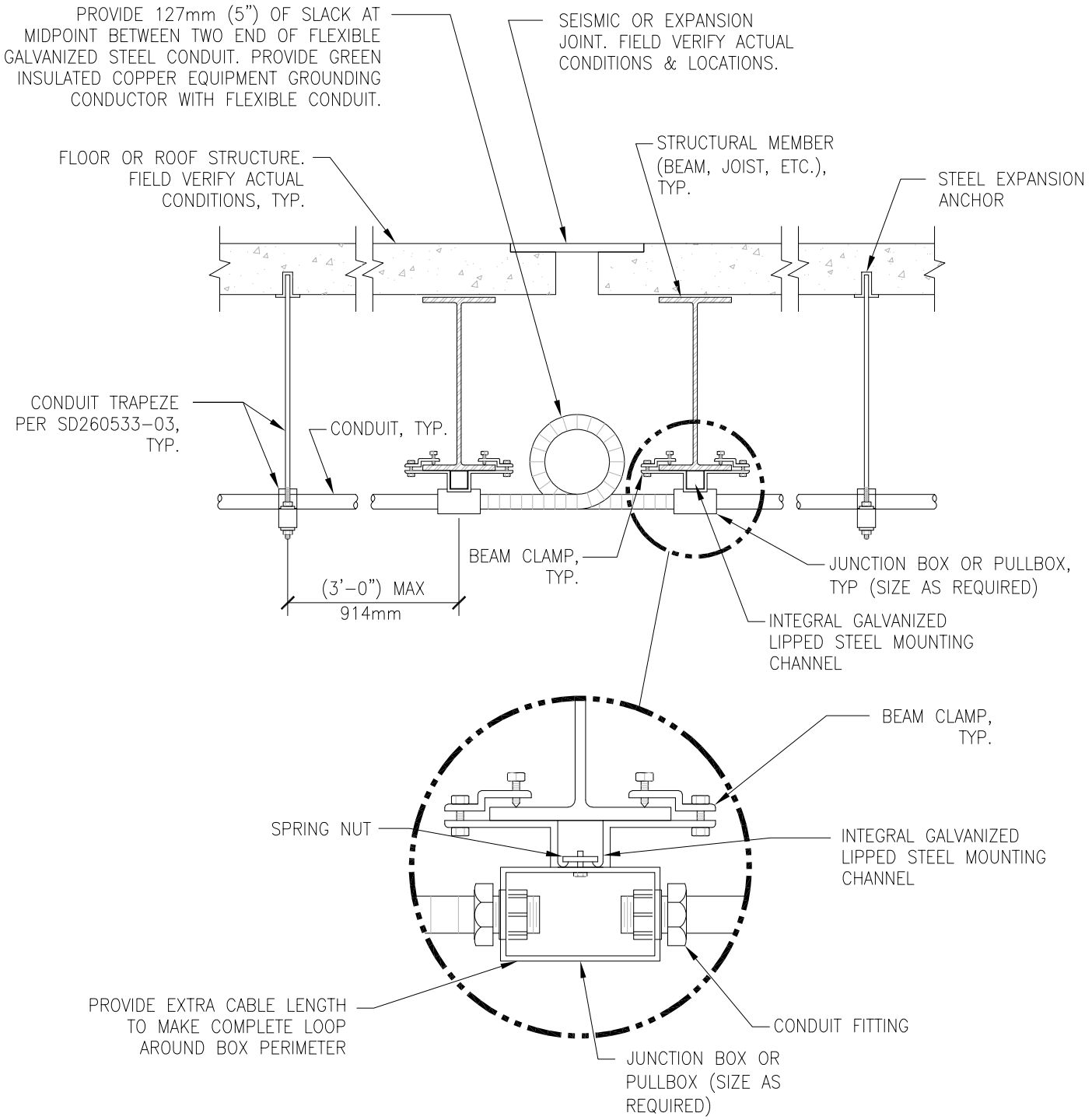

GENERAL NOTE:

1. DETAIL IS APPLICABLE ONLY FOR CONDUIT SMALLER THAN 76mm (3").

CONDUIT EXPANSION JOINT CROSSING-FLEXIBLE CONDUIT

NTS

U.S. Department of Veterans Affairs

DETAIL TITLE / CONDUIT EXPANSION JOINT CROSSING – FLEXIBLE CONDUIT DETAIL

SCALE: NONE

DATE ISSUED: JULY 1, 2020 CAD DETAIL NO.: SD260533-01.DWG

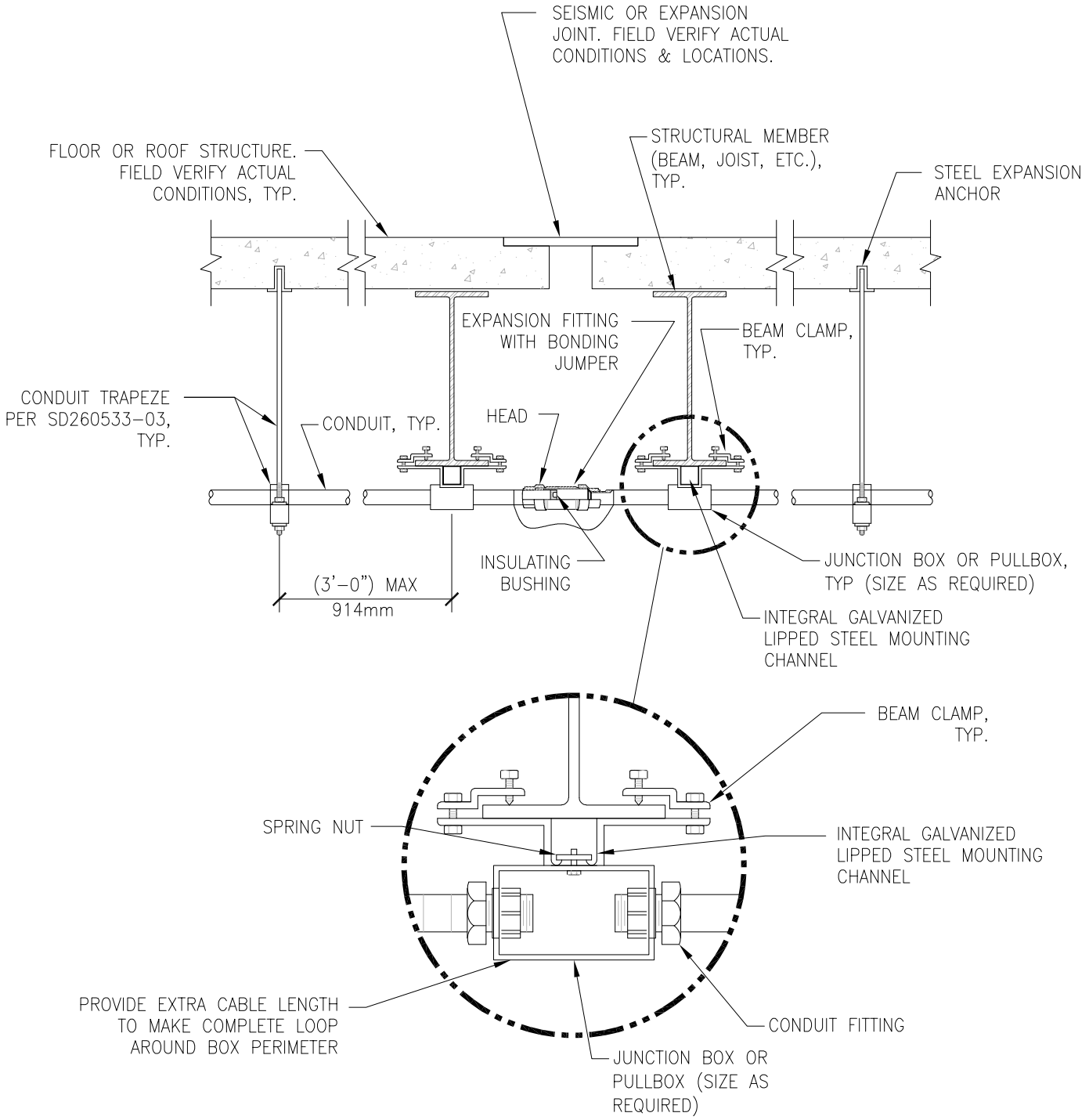

GENERAL NOTE:

1. INSTALLATION IS ACCEPTABLE ALTERNATE TO DETAIL SD260533-01.
2. INSTALLATION IS REQUIRED FOR CONDUIT SMALLER THAN 76mm (3") AND LARGER.

CONDUIT EXPANSION JOINT CROSSING-EXPANSION FITTING

#

NTS

VA | U.S. Department of Veterans Affairs

DETAIL TITLE / CONDUIT EXPANSION JOINT CROSSING – EXPANSION FITTING DETAIL

SCALE: NONE

DATE ISSUED: JULY 1, 2020 CAD DETAIL NO.: SD260533-02.DWG

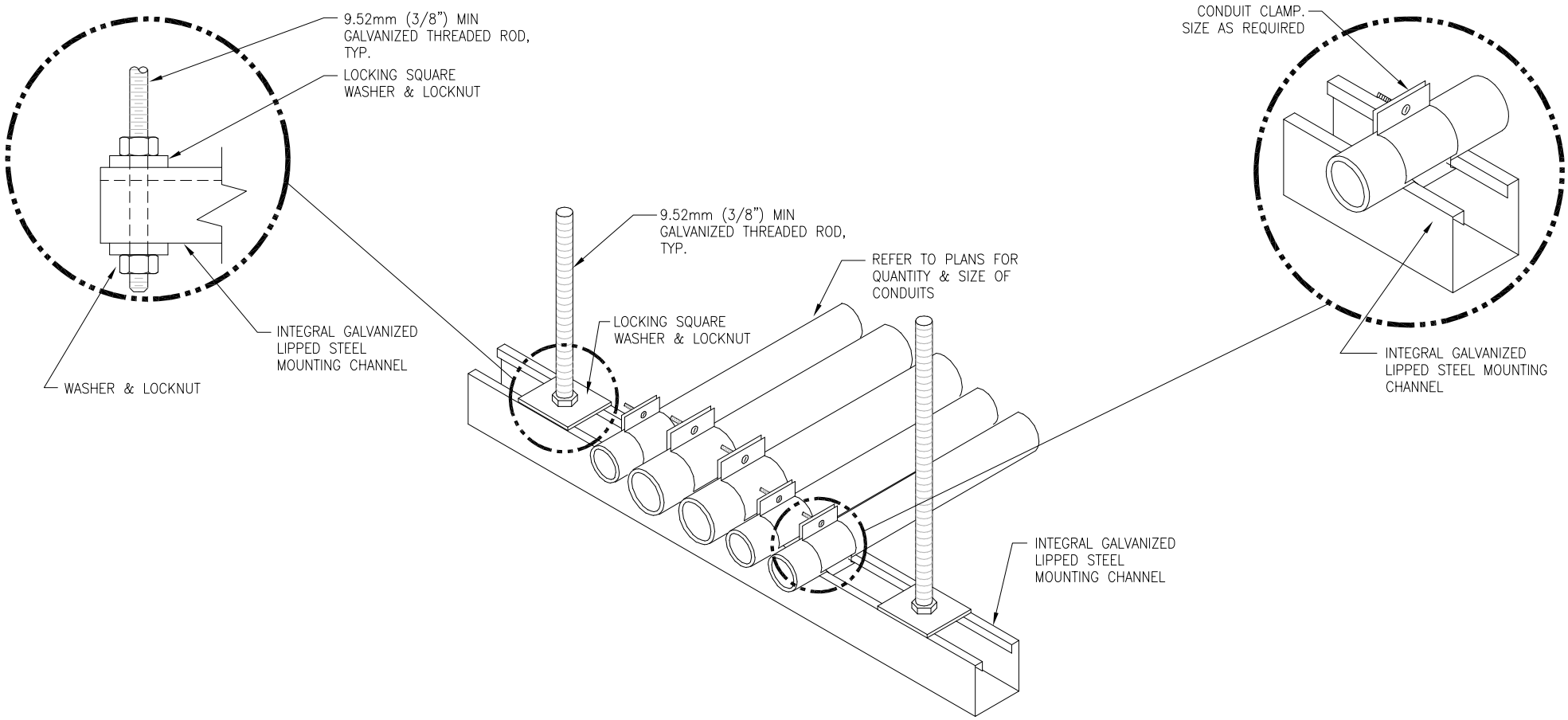

GENERAL NOTES:

1. INTEGRAL GALVANIZED LIPPED STEEL MOUNTING CHANNEL LONGER THAN 915mm (36") SHALL BE INSTALLED WITH A CENTER SUPPORT ROD. SUPPORT RODS SHALL NOT BE GREATER THAN 457mm (18") APART.
2. FASTEN THREADED ROD TO STRUCTURE BY APPROVED METHOD PER SPECIFICATION 26 05 33, RACEWAY AND BOXES FOR ELECTRICAL SYSTEMS. FIELD VERIFY EXACT CONDITIONS.
3. FOR TRAPEZE INSTALLATIONS IN SEISMIC AREAS REFER TO SPECIFICATION SECTION 13 05 41, SEISMIC RESTRAINT REQUIREMENTS FOR NON-STRUCTURAL COMPONENTS.

CONDUIT TRAPEZE MOUNTING DETAIL

NTS

VA | U.S. Department of Veterans Affairs

DETAIL TITLE / CONDUIT TRAPEZE MOUNTING DETAIL

SCALE: NONE

DATE ISSUED: JULY 1, 2020 CAD DETAIL NO.: SD260533-03.DWG

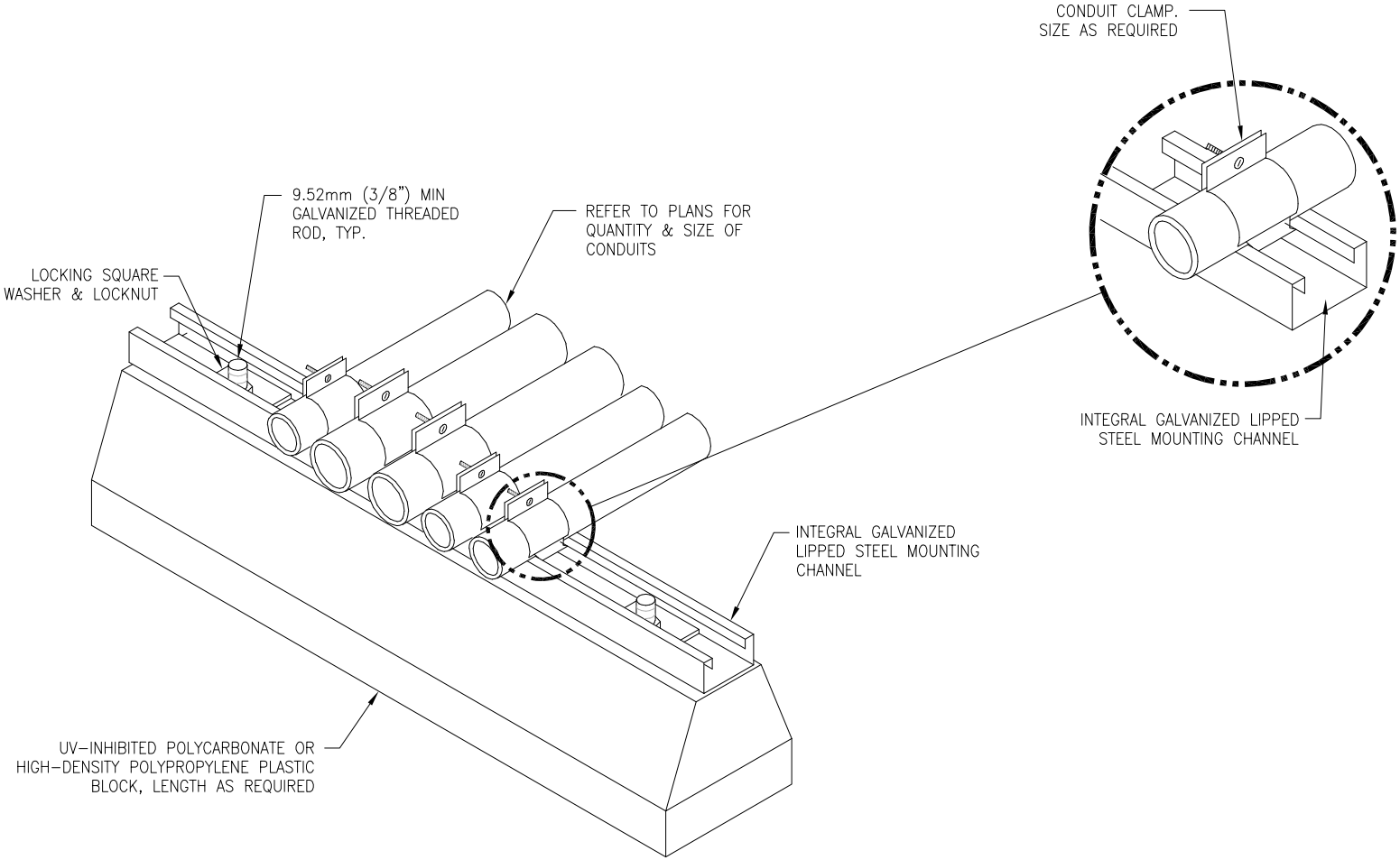

ROOF CONDUIT SUPPORT DETAIL

#

NTS

U.S. Department of Veterans Affairs

DETAIL TITLE / ROOF CONDUIT SUPPORT DETAIL

SCALE: NONE

DATE ISSUED: JULY 1, 2020 CAD DETAIL NO.: SD260533-04.DWG

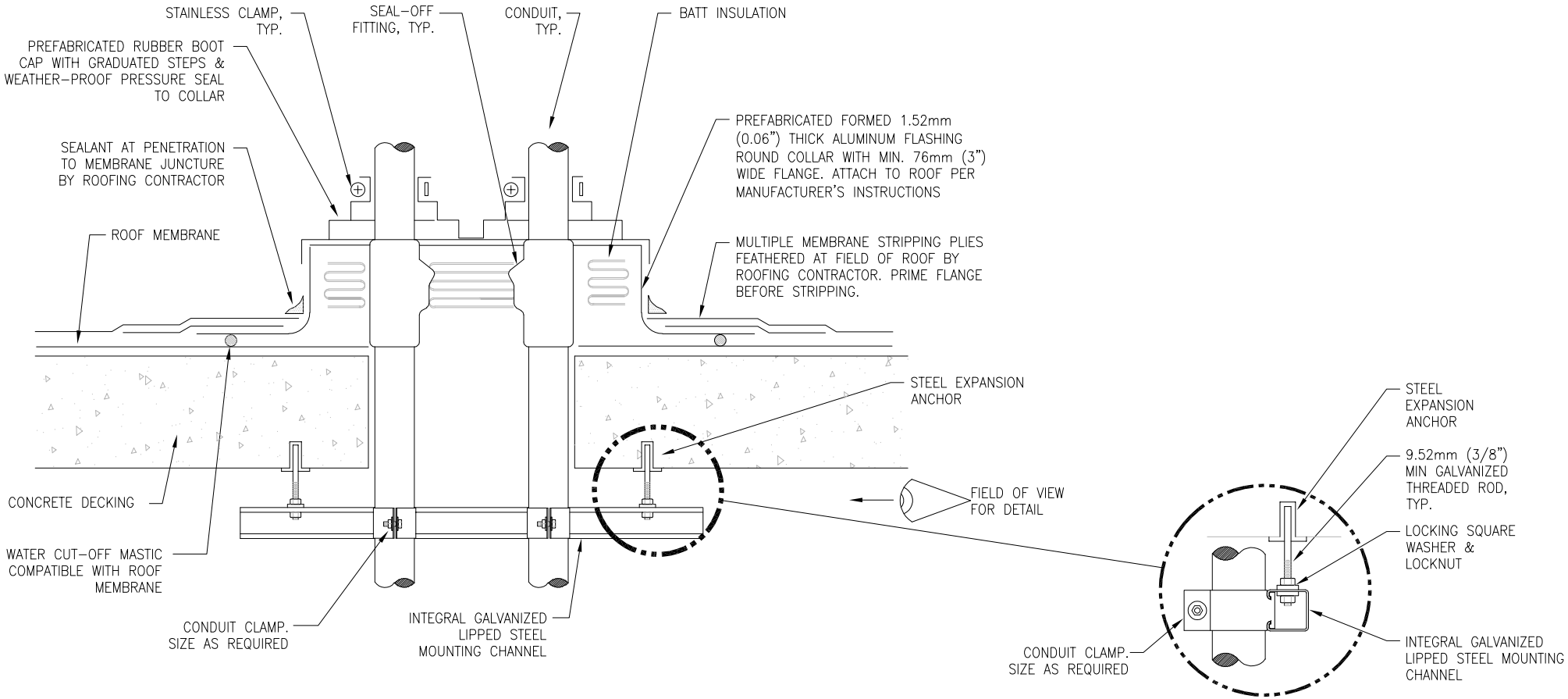

GENERAL NOTES:

1. MAINTAIN A MINIMUM CLEARANCE OF 305mm (12") ON ALL SIDES OF ROOF PENETRATION FROM WALLS, CURBS, AND OTHER PROJECTIONS TO FACILITATE PROPER FLASHING.
2. FLANGES OF ADJACENT FLASHINGS SHALL NOT BE CUT OR OVERLAPPED.
3. VERIFY ROOF & STRUCTURAL SYSTEM WITH ARCHITECT.
4. COORDINATE FLASHING INSTALLATION WITH ROOFING CONTRACTOR TO ENSURE PROPER METHODS & MATERIALS ARE USED TO MAINTAIN ROOF WARRANTY.

CONDUIT ROOF PENETRATION DETAIL

NTS

VA | U.S. Department of Veterans Affairs

DETAIL TITLE / CONDUIT ROOF PENETRATION DETAIL

SCALE: NONE

DATE ISSUED: JULY 1, 2020 CAD DETAIL NO.: SD260533-05.DWG

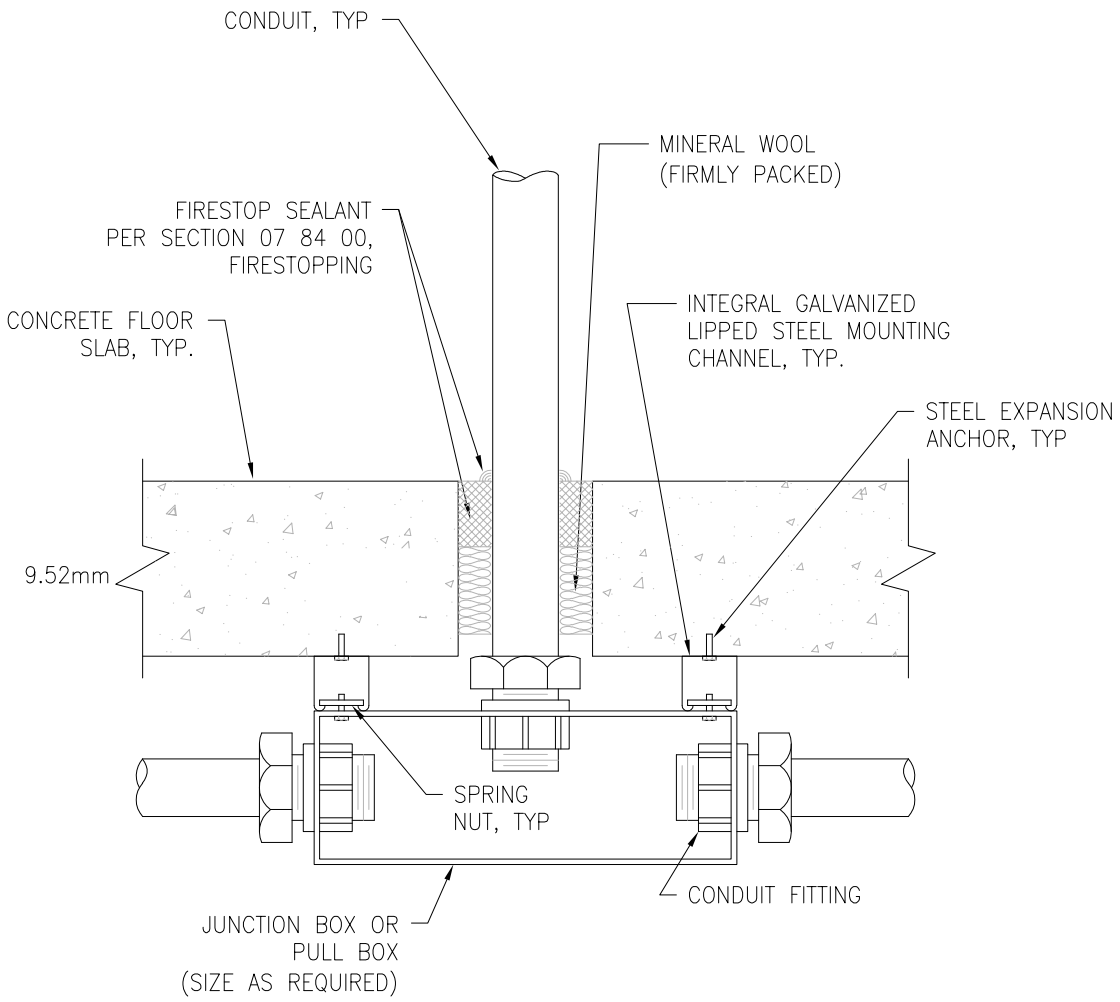

FLOOR SLAB PENETRATION DETAIL

#

NTS

U.S. Department of Veterans Affairs

DETAIL TITLE / FLOOR SLAB PENETRATION DETAIL

SCALE: NONE

DATE ISSUED: JULY 1, 2020

CAD DETAIL NO.: SD260539-01DWG

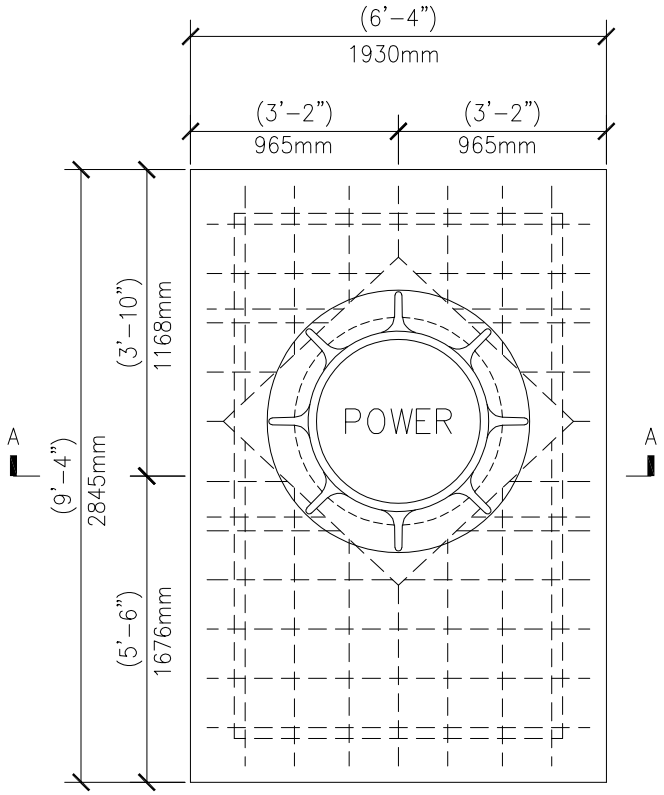

TOP VIEW

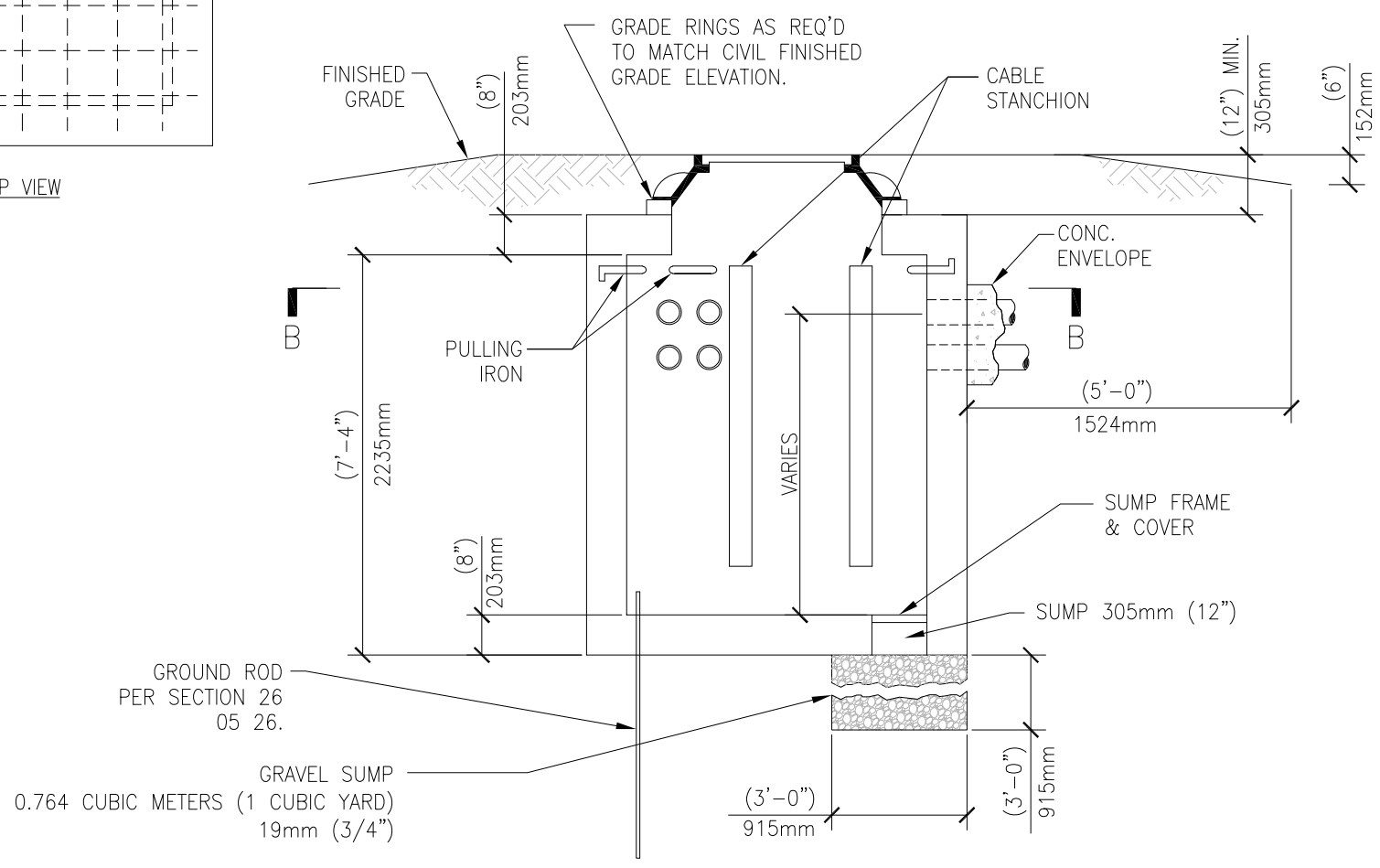

SECTION "A-A"

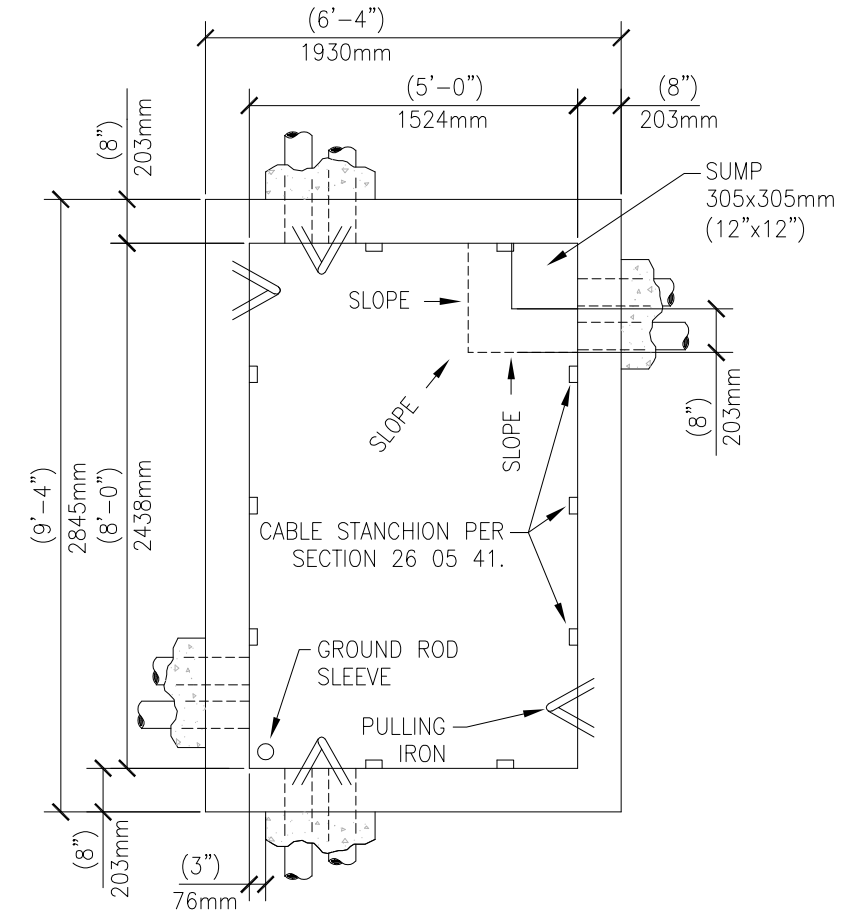

SECTION "B-B"

GENERAL NOTE:
INCLUDE ALUMINUM LADDER (NOT SHOWN FOR CLARITY)

POWER MANHOLE DETAILS

NTS

DETAIL TITLE / POWER MANHOLE DETAIL

U.S. Department of Veterans Affairs

VA

SCALE: NONE

DATE ISSUED: JULY 1, 2020

CAD DETAIL NO.: SD260541-01.DWG

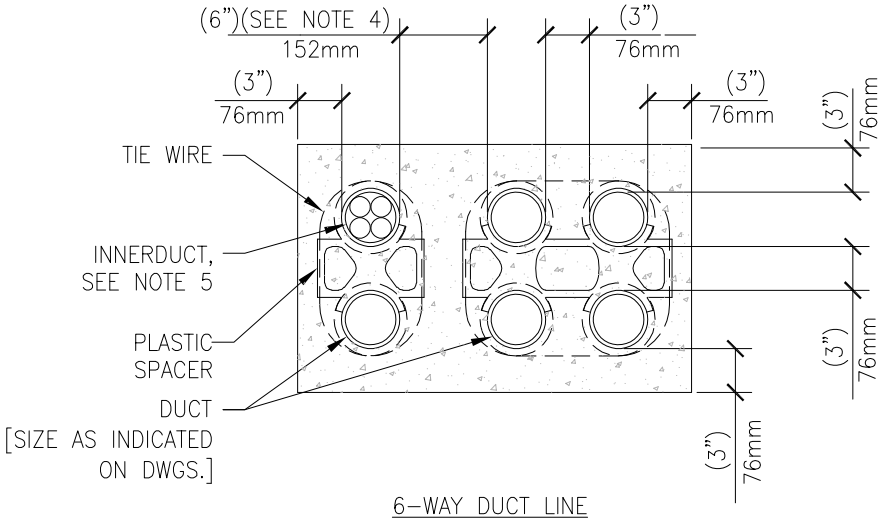

6–WAY DUCT LINE

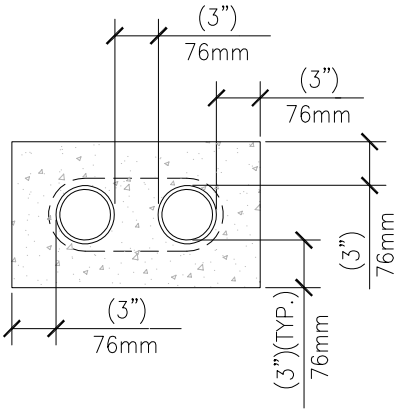

2–WAY DUCT LINE

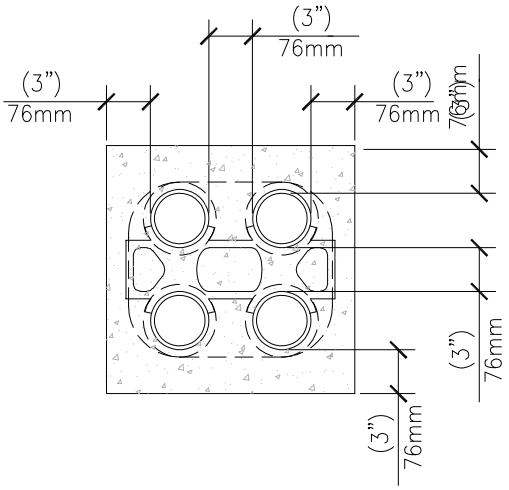

4–WAY DUCT LINE

GENERAL NOTES:

1. CONCRETE SHALL BE 2000 P.S.I. @ 28 DAYS, OR AS SPECIFIED.
2. PROVIDE #4 REINFORCING RODS ON TOP AND BOTTOM OF DUCTS WHEN CROSSING OR PLACED IN ROADWAYS.
3. MINIMUM COVER TO TOP OF ENVELOPE SHALL BE 610mm (24") OR AS OTHERWISE SPECIFIED IN SECTION 26 05 41.
4. PROVIDE MINIMUM 152mm (6") SPACE BETWEEN POWER AND TELECOMMUNICATION DUCTS. INCREASE SIZE AS REQUIRED.
5. INNERDUCT QUANTITY AND SIZE AS INDICATED ON PLANS.

DUCT BANK DETAILS

NTS

VA | U.S. Department of Veterans Affairs

DETAIL TITLE / DUCT BANK DETAIL

SCALE: NONE

DATE ISSUED: JULY 1, 2020 CAD DETAIL NO.: SD260541–02 DWG

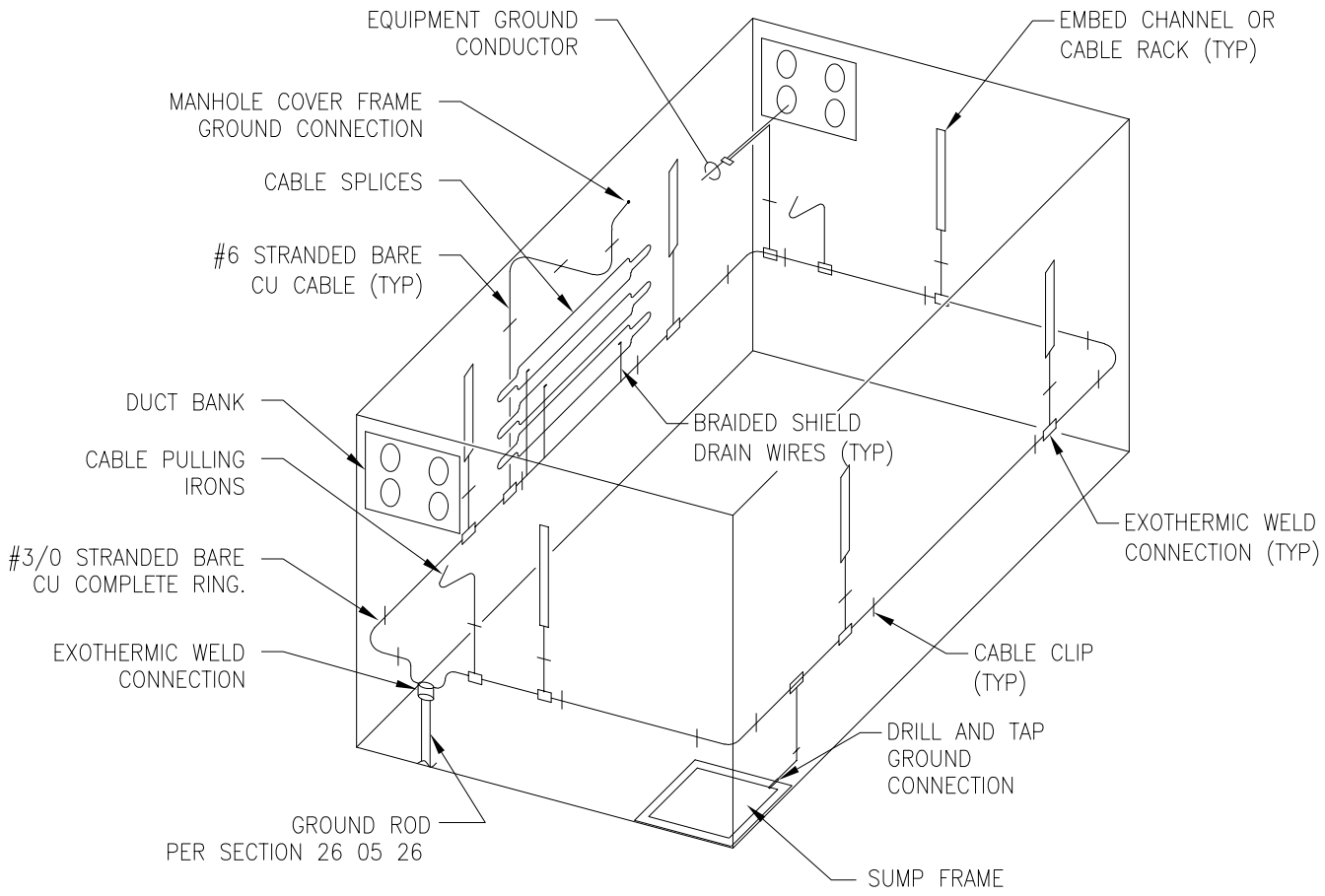

MANHOLE GROUNDING DETAIL

#

NTS

U.S. Department of Veterans Affairs

DETAIL TITLE / MANHOLE GROUNDING DETAIL

SCALE: NONE

DATE ISSUED: JULY 1, 2020

CAD DETAIL NO.: SD260541-03 DWG

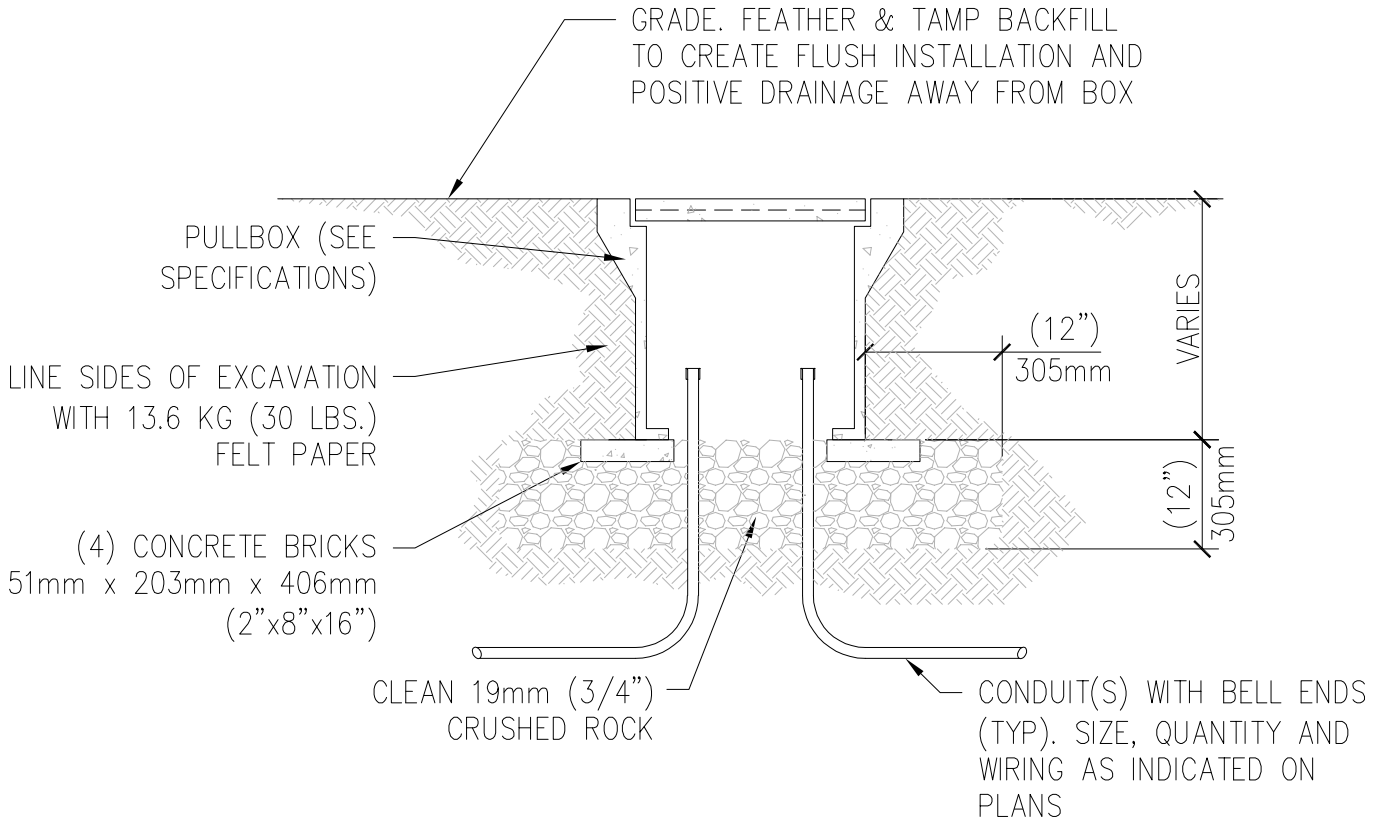

UNDERGROUND CONCRETE PULLBOX - TURF AREA DETAIL

#

NTS

VA | U.S. Department of Veterans Affairs

DETAIL TITLE / UNDERGROUND CONCRETE PULLBOX – TURF AREA DETAIL

SCALE: NONE

DATE ISSUED: JULY 1, 2020 CAD DETAIL NO.: SD260541-04 DWG

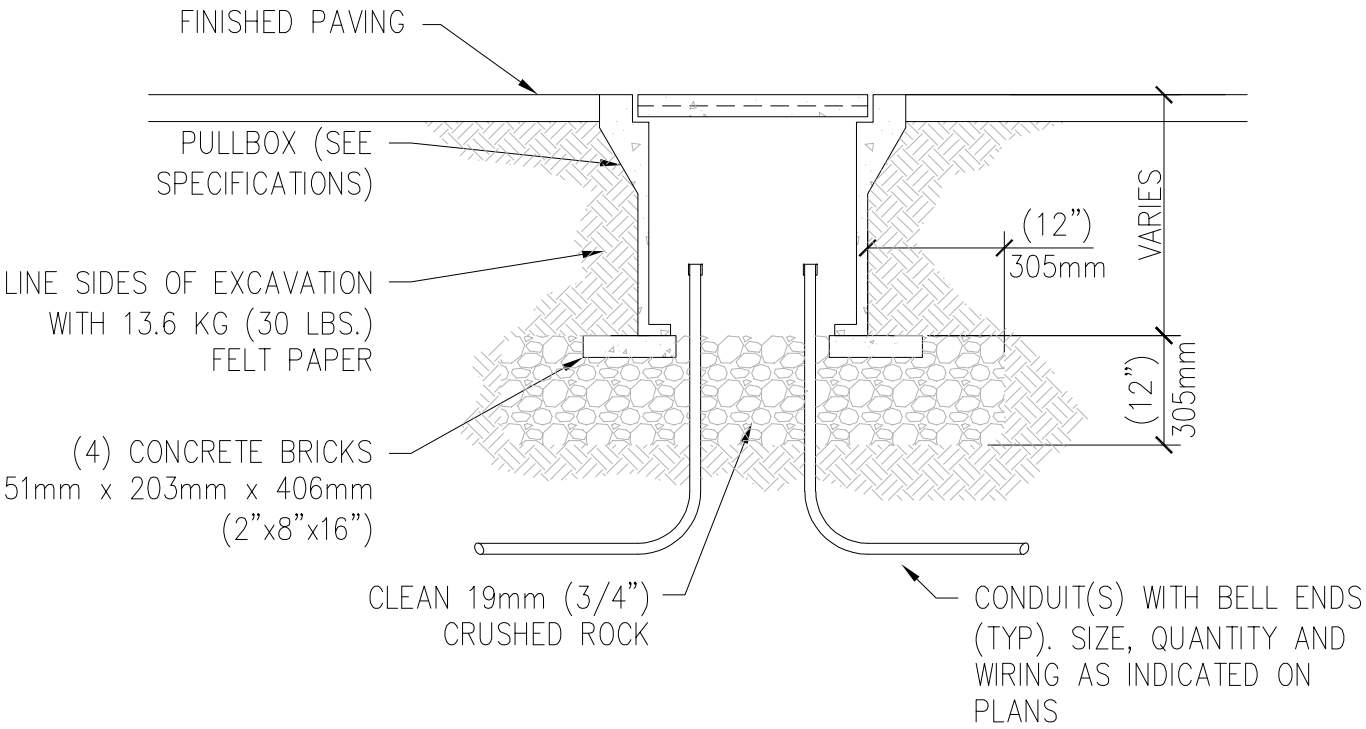

UNDERGROUND CONCRETE PULLBOX - PAVED AREAS DETAIL

NTS

U.S. Department of Veterans Affairs

DETAIL TITLE / UNDERGROUND CONCRETE PULLBOX - PAVED AREAS DETAIL

SCALE: NONE

DATE ISSUED: JULY 1, 2020 CAD DETAIL NO.: SD260541-05 DWG

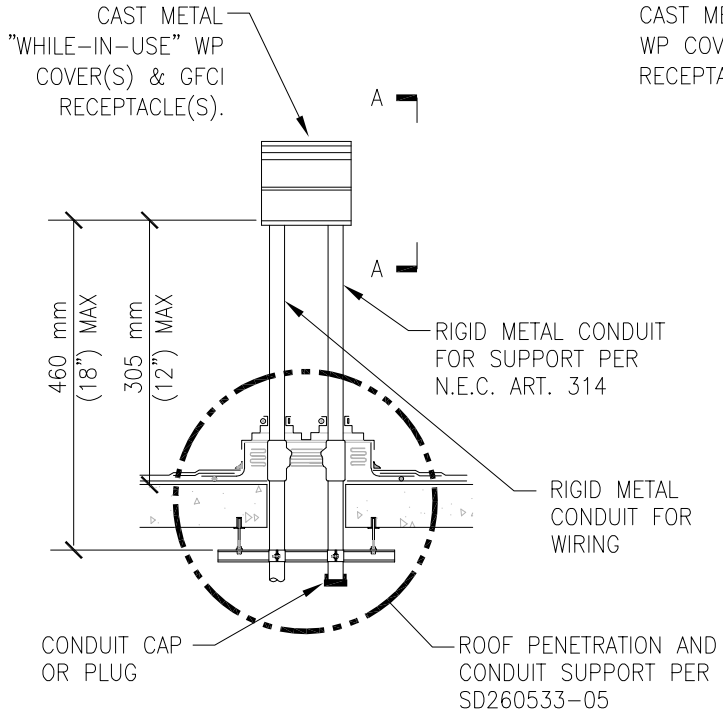

ELEVATION

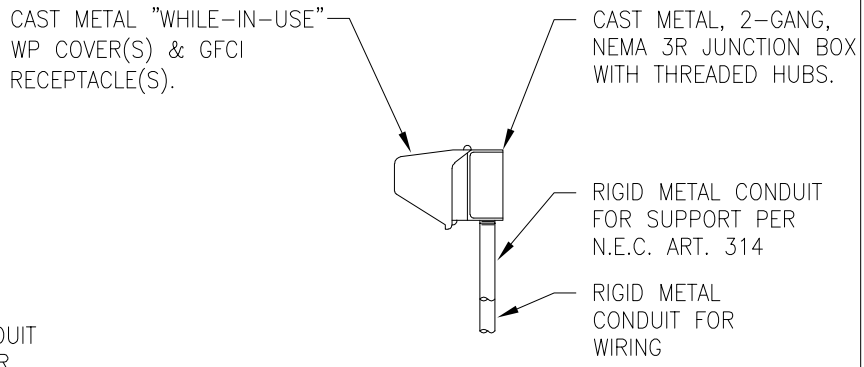

SECTION "A-A"

RECEPTACLE ROOF MOUNTING DETAIL

NTS

U.S. Department of Veterans Affairs

DETAIL TITLE / RECEPTACLE ROOF MOUNTING DETAIL

SCALE: NONE

DATE ISSUED: JULY 1, 2020

CAD DETAIL NO.: SD262726-01 DWG

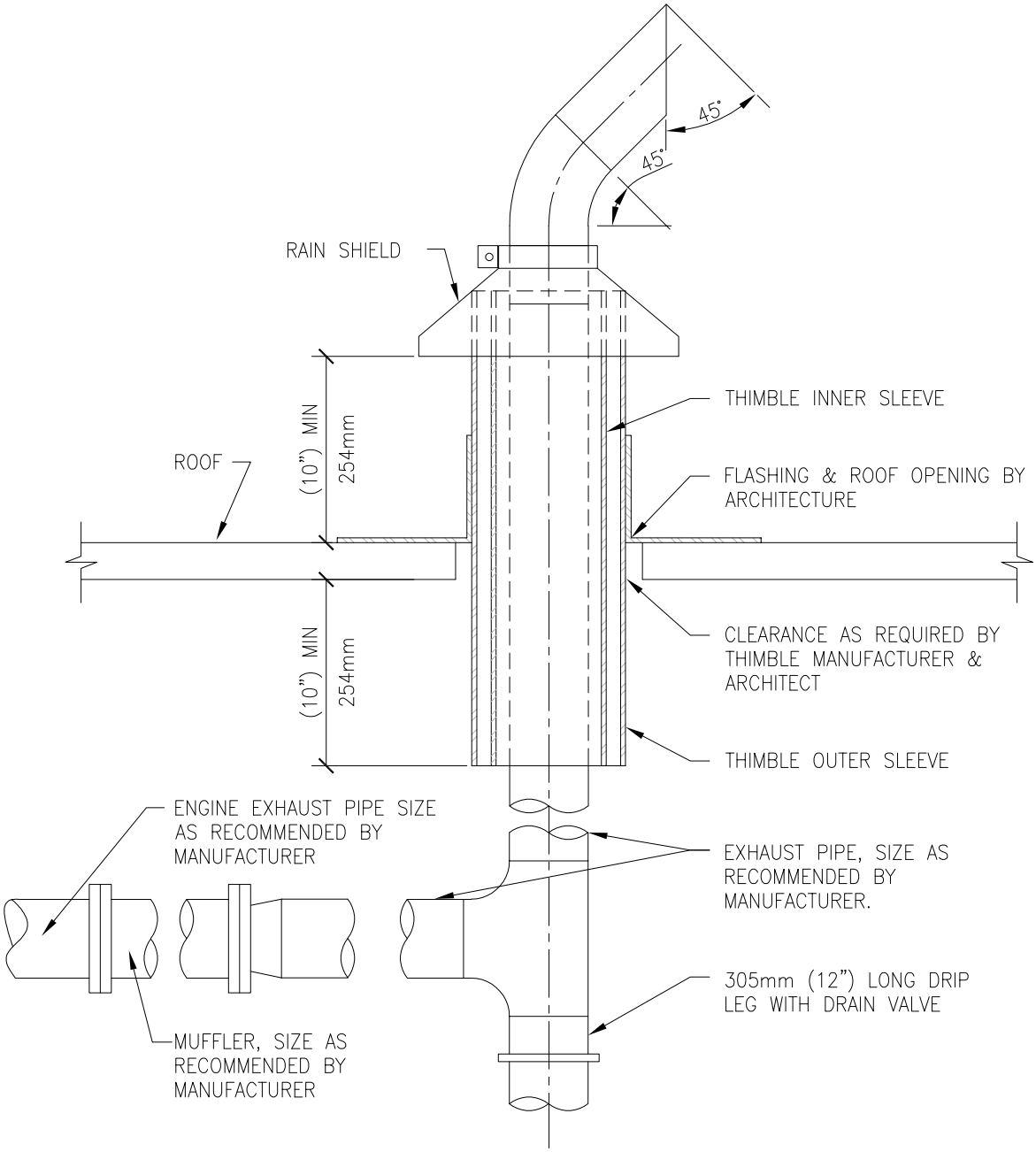

EMERGENCY GENERATOR EXHAUST

#

NTS

U.S. Department of Veterans Affairs

DETAIL TITLE / EMERGENCY GENERATOR EXHAUST

SCALE: NONE

DATE ISSUED: JULY 1, 2020

CAD DETAIL NO.: SD263213-01 DWG

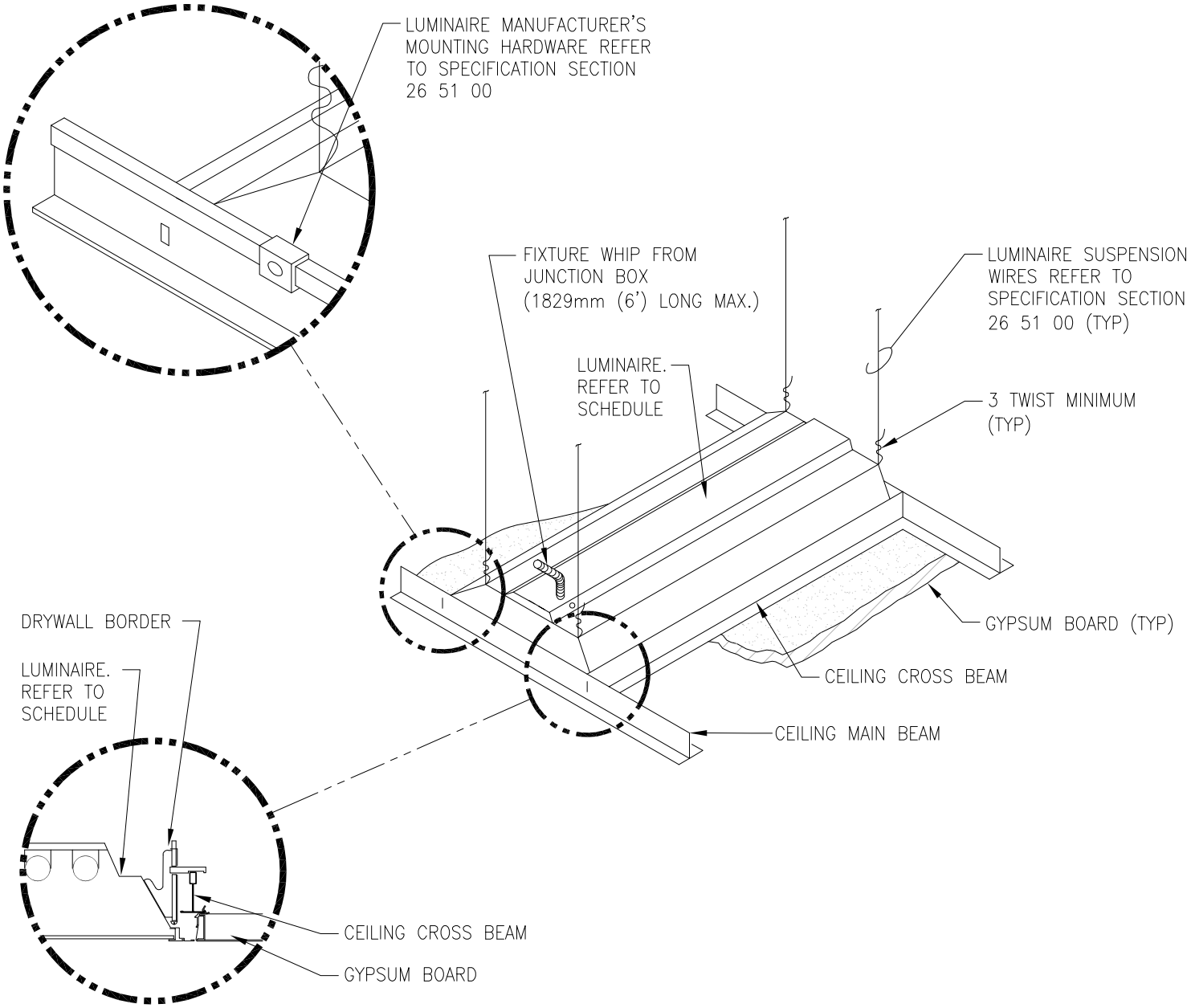

GENERAL NOTE:

1. INSTALL IN ACCORDANCE WITH MANUFACTURER'S MOUNTING INSTRUCTIONS AND USING THE RECOMMENDED MOUNTING HARDWARE.

LUMINAIRE MOUNTING - GYPBOARD CEILING

NTS

U.S. Department of Veterans Affairs

DETAIL TITLE / LUMINAIRE MOUNTING - GYPBOARD CEILING DETAIL

SCALE: NONE

DATE ISSUED: JULY 1, 2020 CAD DETAIL NO.: SD265100-01 DWG

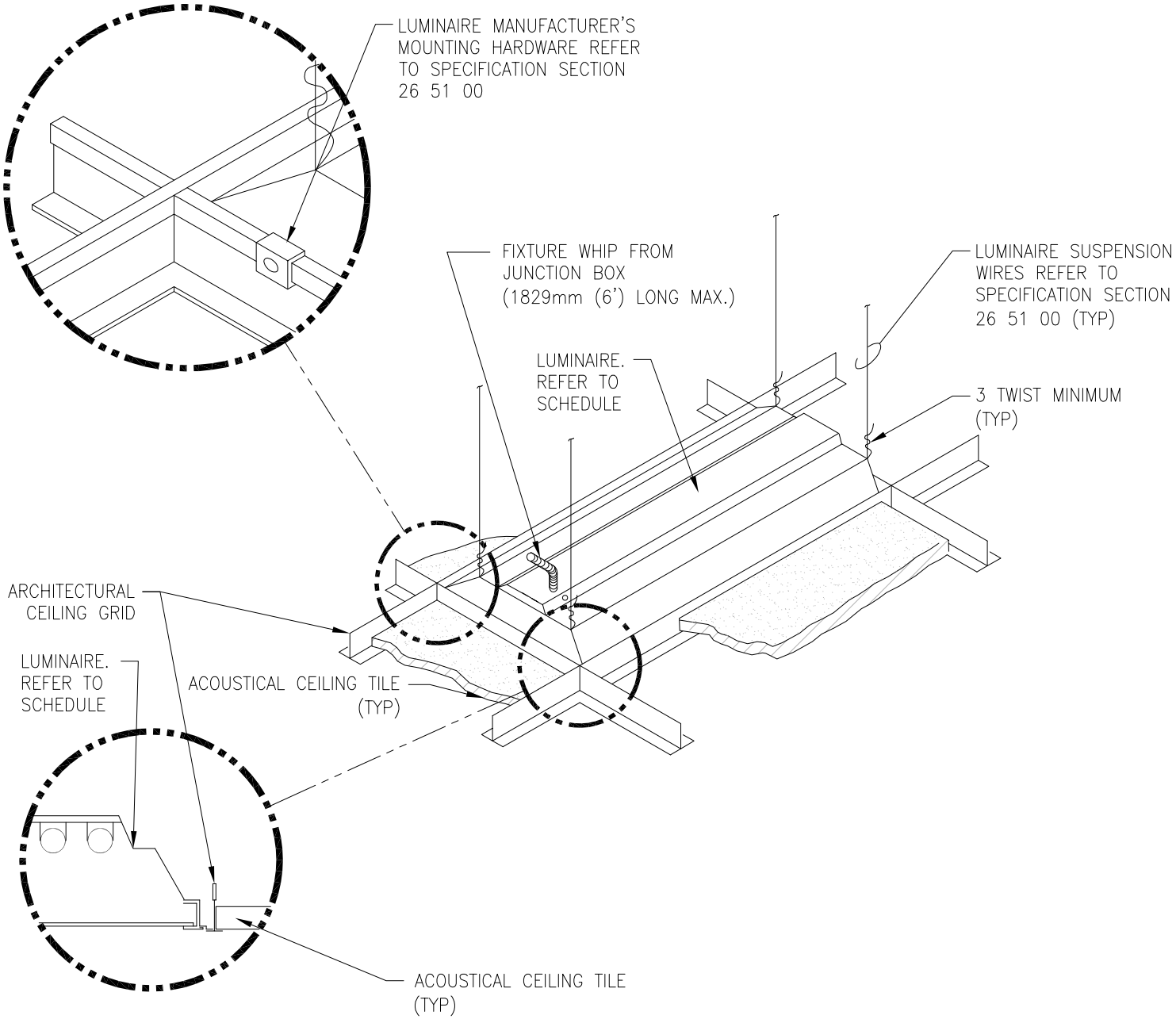

GENERAL NOTE:

1. INSTALL IN ACCORDANCE WITH MANUFACTURER'S MOUNTING INSTRUCTIONS AND USING THE RECOMMENDED MOUNTING HARDWARE.

LUMINAIRE MOUNTING - LAY-IN CEILING

NTS

U.S. Department of Veterans Affairs

DETAIL TITLE / LUMINAIRE MOUNTING - LAY-IN CEILING

SCALE: NONE

DATE ISSUED: JULY 1, 2020 CAD DETAIL NO.: SD265100-02 DWG

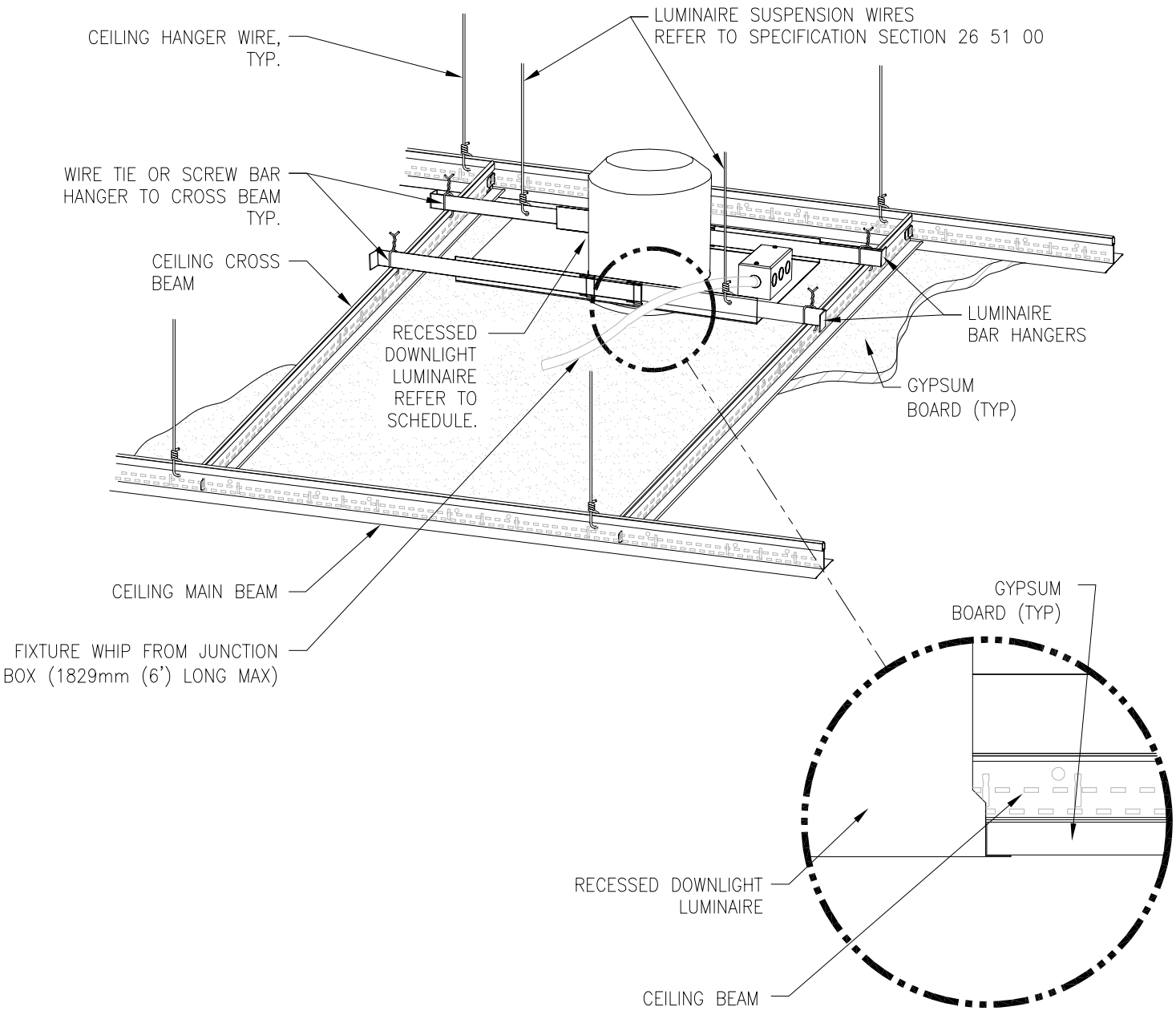

GENERAL NOTE:

1. INSTALL IN ACCORDANCE WITH MANUFACTURER'S MOUNTING INSTRUCTIONS AND USING THE RECOMMENDED MOUNTING HARDWARE.

DOWNLIGHT MOUNTING - GYPBOARD CEILING

#

NTS

VA | U.S. Department of Veterans Affairs

DETAIL TITLE / DOWNLIGHT MOUNTING - GYP BOARD CEILING

SCALE: NONE

DATE ISSUED: JULY 1, 2020 CAD DETAIL NO.: SD265100-03DWG

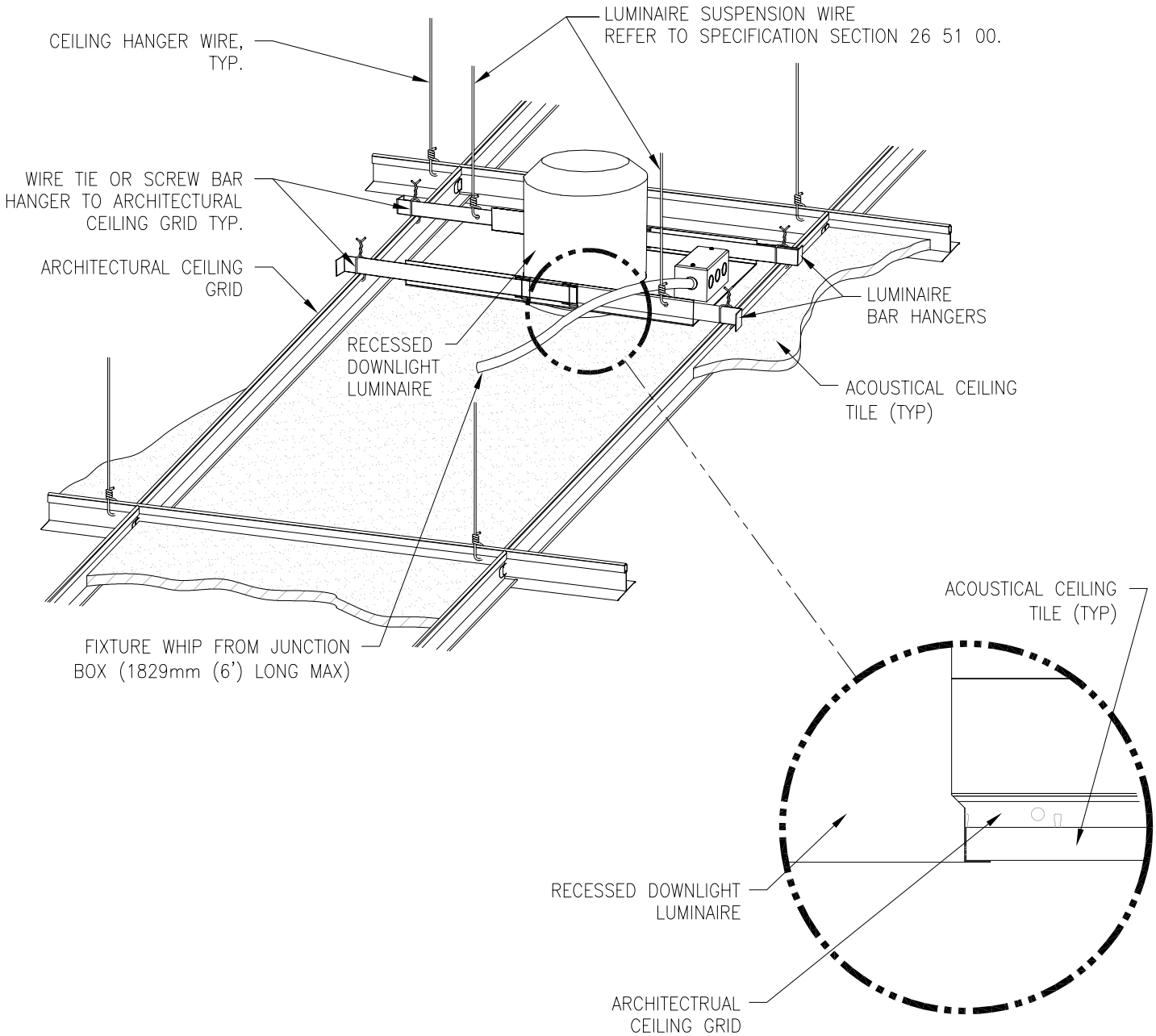

GENERAL NOTE:

1. INSTALL IN ACCORDANCE WITH MANUFACTURER'S MOUNTING INSTRUCTIONS AND USING THE RECOMMENDED MOUNTING HARDWARE.

DOWNLIGHT MOUNTING - LAY-IN CEILING

#

NTS

U.S. Department of Veterans Affairs

DETAIL TITLE / DOWNLIGHT MOUNTING - LAY-IN CEILING

SCALE: NONE

DATE ISSUED: JULY 1, 2020 CAD DETAIL NO.: SD265100-04 DWG

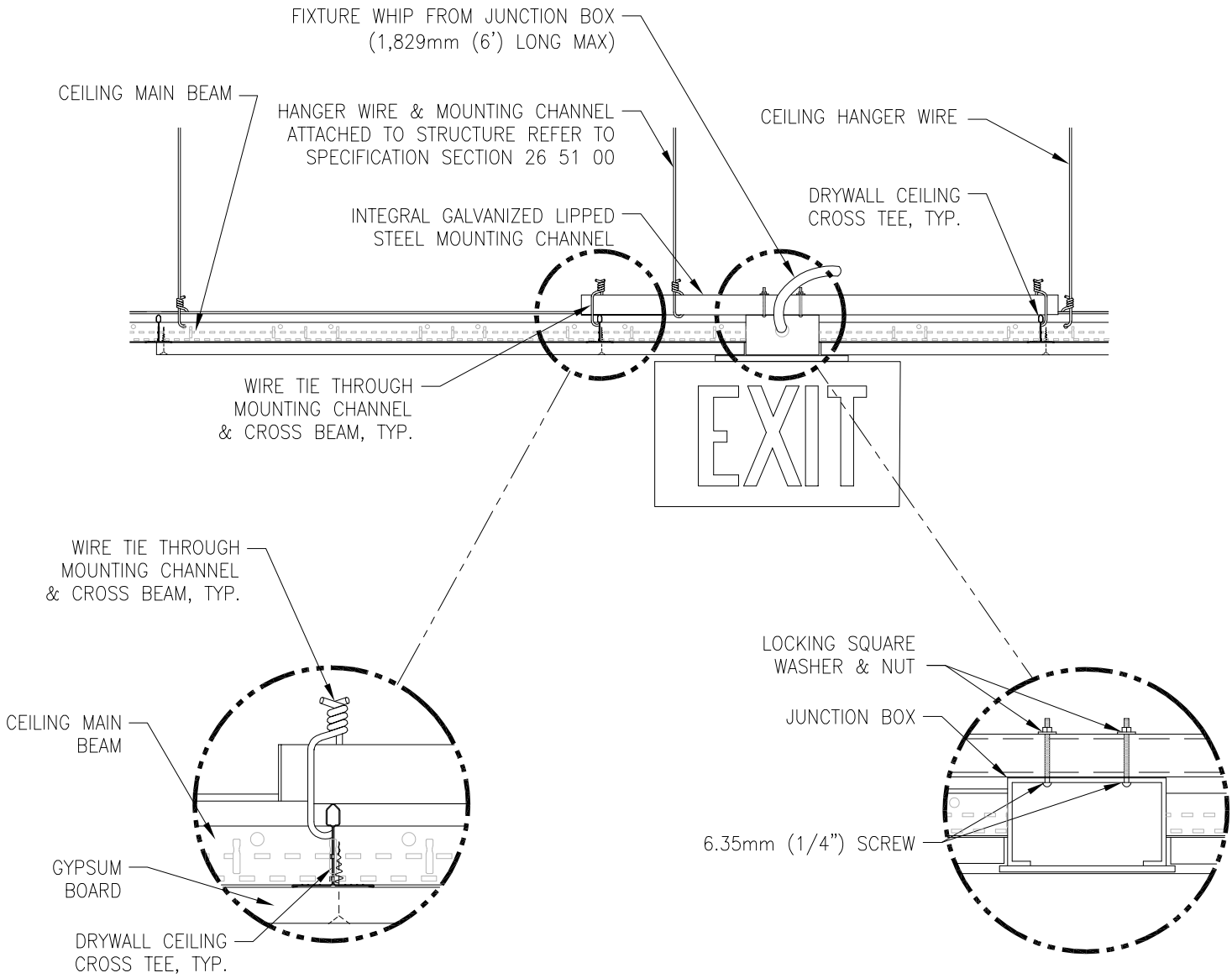

GENERAL NOTE:

1. INSTALL IN ACCORDANCE WITH MANUFACTURER'S MOUNTING INSTRUCTIONS AND USING THE RECOMMENDED MOUNTING HARDWARE.

EXIT SIGN MOUNTING - GYPBOARD CEILING

#

NTS

VA | U.S. Department of Veterans Affairs

DETAIL TITLE / EXIT SIGN MOUNTING - GYPBOARD CEILING

SCALE: NONE

DATE ISSUED: JULY 1, 2020 CAD DETAIL NO.: SD265100-05 DWG

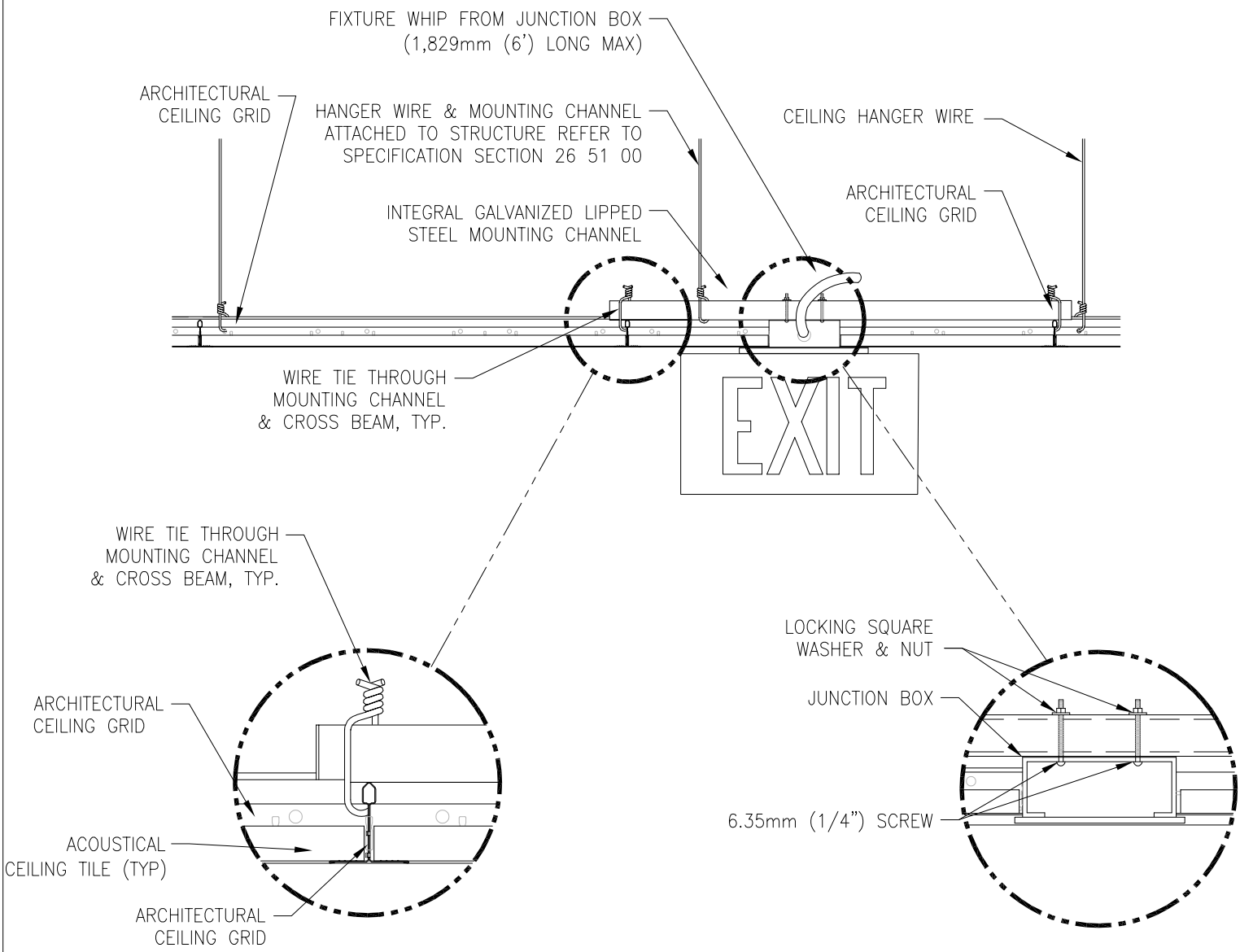

GENERAL NOTE:

1. INSTALL IN ACCORDANCE WITH MANUFACTURER'S MOUNTING INSTRUCTIONS AND USING THE RECOMMENDED MOUNTING HARDWARE.

EXIT SIGN MOUNTING - LAY-IN CEILING

NTS

VA | U.S. Department of Veterans Affairs

DETAIL TITLE / EXIT SIGN MOUNTING - LAY-IN CEILING

SCALE: NONE

DATE ISSUED: JULY 1, 2020 CAD DETAIL NO.: SD265100-06 DWG

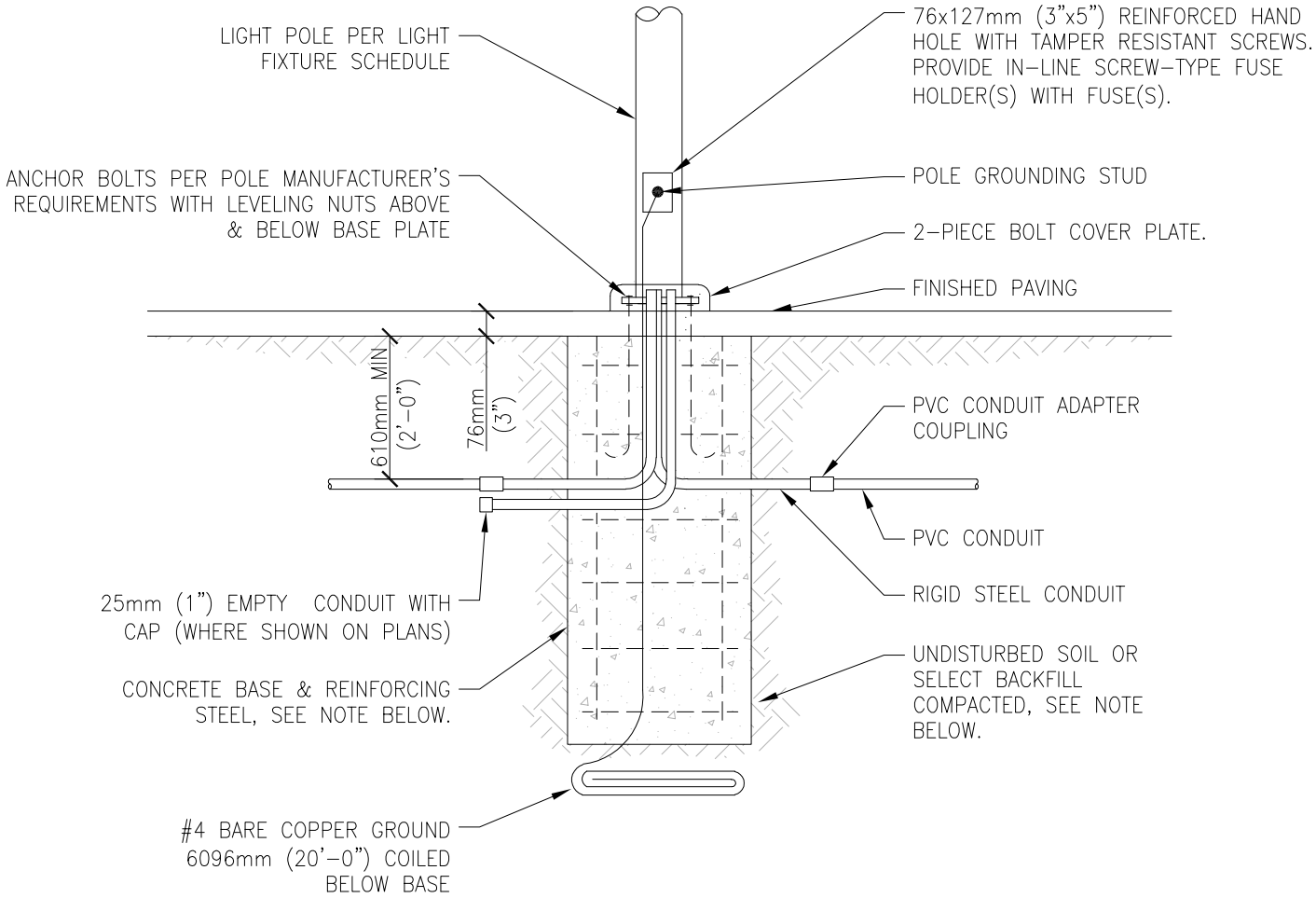

GENERAL NOTES:

1. BACKFILL, CONCRETE, REINFORCING STEEL, & ANCHOR BOLTS ARE SHOWN FOR REFERENCE ONLY. STRUCTURAL DESIGN IS SHOWN ON STRUCTURAL DRAWINGS.
2. REFER TO SPECIFICATION SECTION 26 56 00 FOR MOUNTING & LEVELING REQUIREMENTS.
3. REFER TO LANDSCAPE DETAILS FOR INSTALLATION OF PAVERS & INTERFACE BETWEEN PAVERS AND POLE BASE.

POLE BASE DETAIL - PAVED AREAS

NTS

U.S. Department of Veterans Affairs

DETAIL TITLE / POLE BASE DETAIL - PAVED AREAS

SCALE: NONE

DATE ISSUED: JULY 1, 2020 CAD DETAIL NO.: SD265600-01 DWG

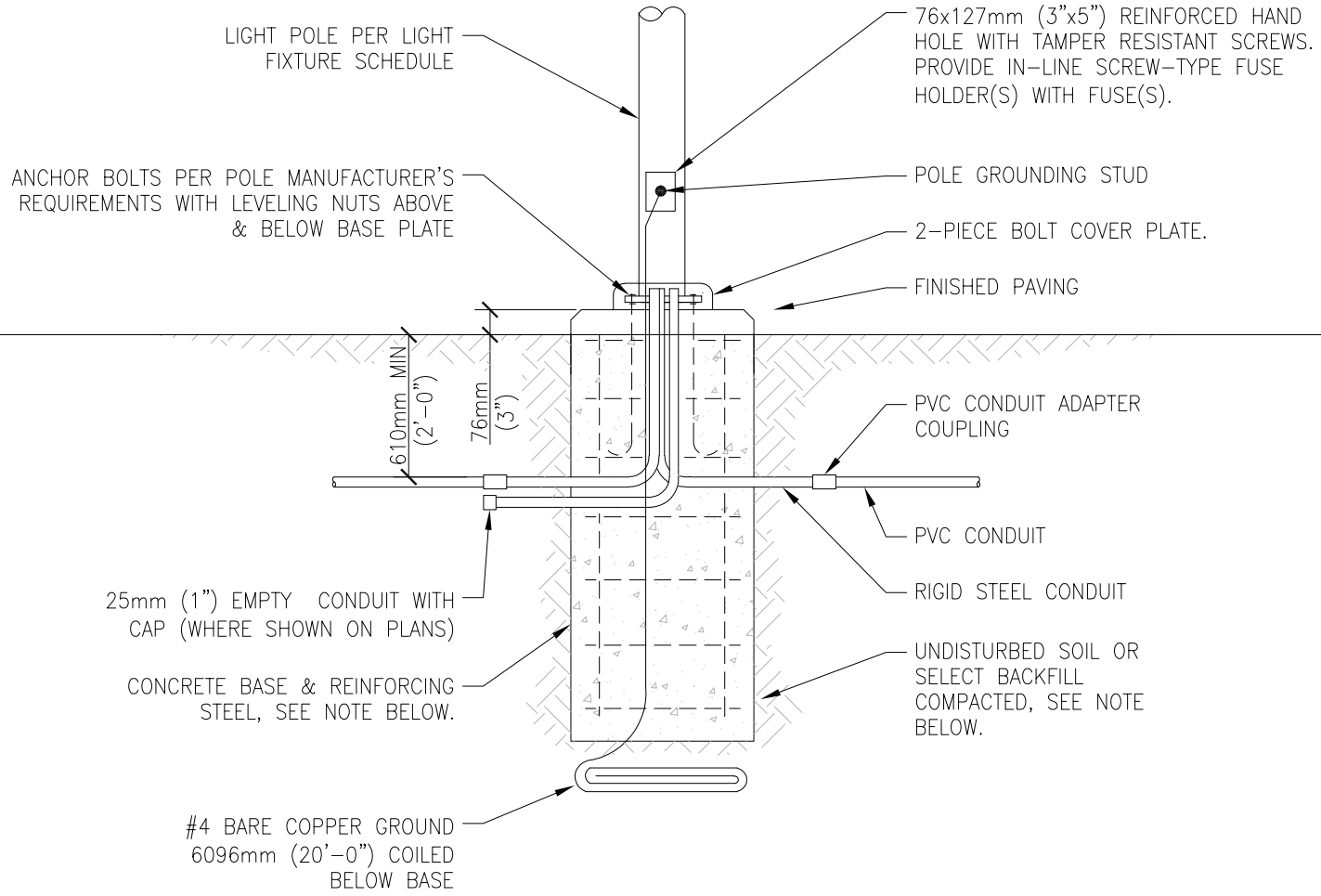

GENERAL NOTES:

1. BACKFILL, CONCRETE, REINFORCING STEEL, & ANCHOR BOLTS ARE SHOWN FOR REFERENCE ONLY. STRUCTURAL DESIGN IS SHOWN ON STRUCTURAL DRAWINGS.

2. REFER TO SPECIFICATION SECTION 26 56 00 FOR MOUNTING & LEVELING REQUIREMENTS.

POLE BASE DETAIL - TURF AREAS

#

NTS

VA | U.S. Department of Veterans Affairs

DETAIL TITLE / POLE BASE DETAIL - TURF AREAS

SCALE: NONE

DATE ISSUED: JULY 1, 2020 CAD DETAIL NO.: SD265600-02 DWG

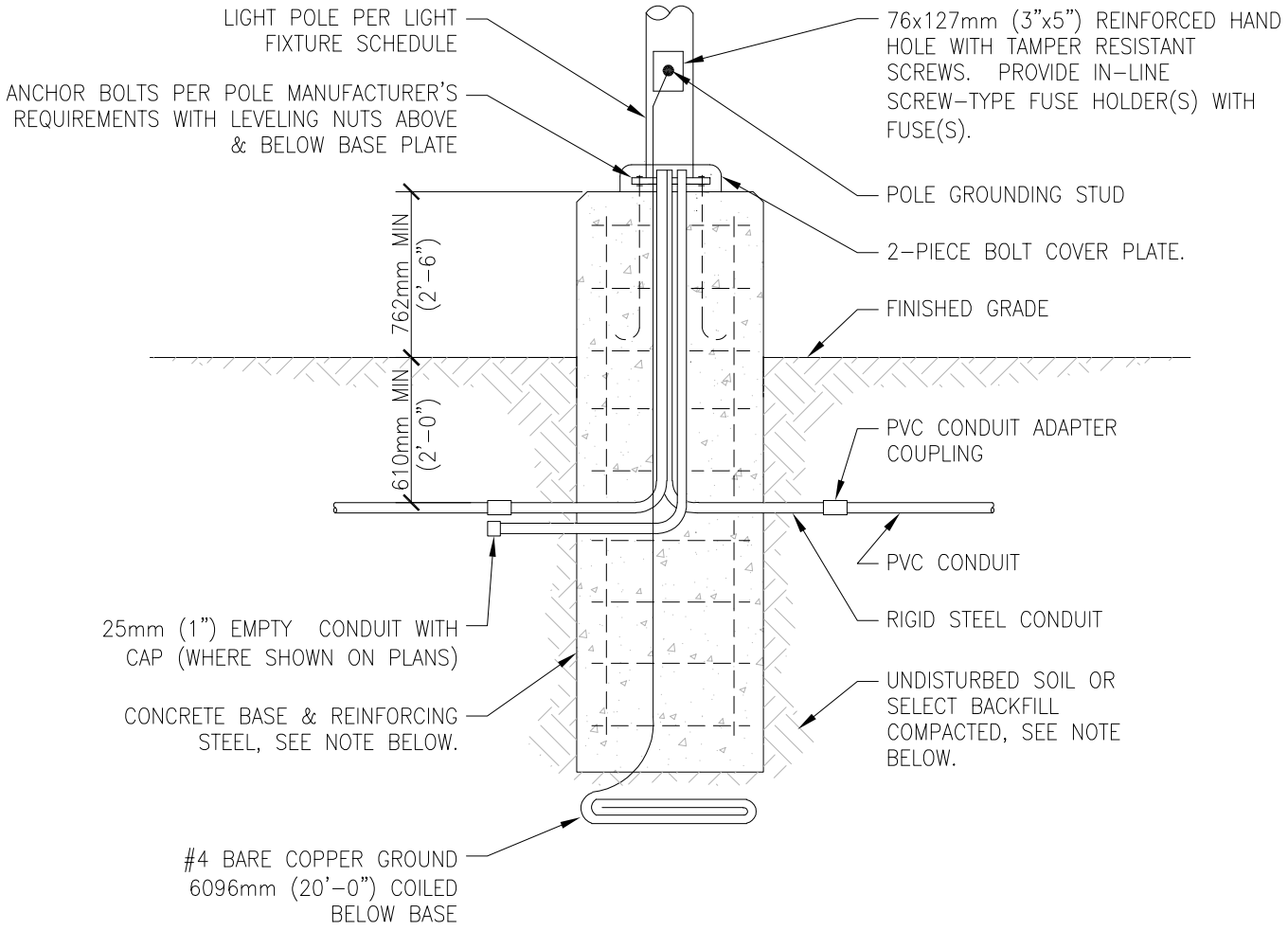

GENERAL NOTES:

1. BACKFILL, CONCRETE, REINFORCING STEEL, & ANCHOR BOLTS ARE SHOWN FOR REFERENCE ONLY. STRUCTURAL DESIGN IS SHOWN ON STRUCTURAL DRAWINGS.

2. REFER TO SPECIFICATION SECTION 26 56 00 FOR MOUNTING & LEVELING REQUIREMENTS.

POLE BASE DETAIL - TURF AREAS

#

NTS

U.S. Department of Veterans Affairs

DETAIL TITLE / POLE BASE DETAIL - TURF AREAS

SCALE: NONE

DATE ISSUED: JULY 1, 2020

CAD DETAIL NO.: SD265600-03 DWG

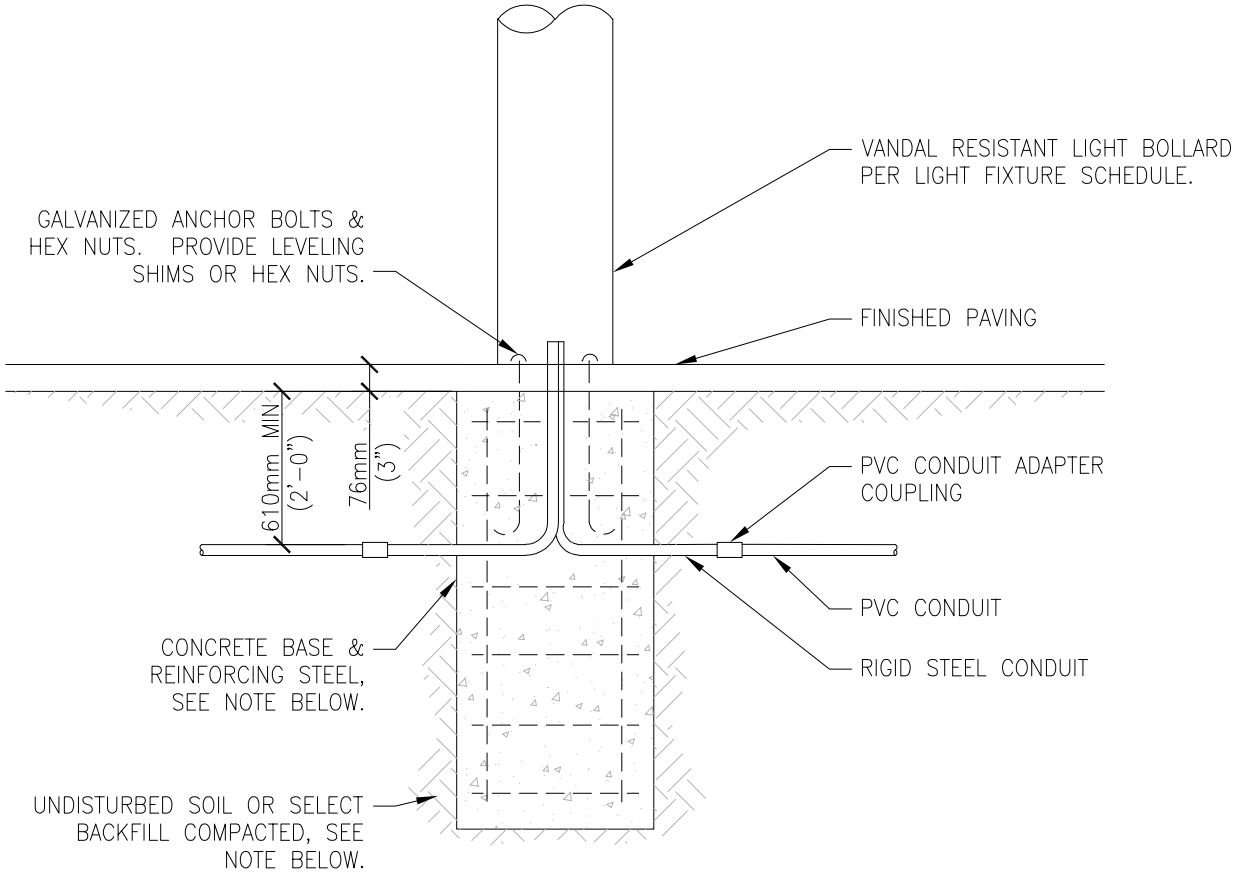

GENERAL NOTES:

1. BACKFILL, CONCRETE, REINFORCING STEEL, & ANCHOR BOLTS ARE SHOWN FOR REFERENCE ONLY. STRUCTURAL DESIGN IS SHOWN ON STRUCTURAL DRAWINGS.
2. REFER TO SPECIFICATION SECTION 26 56 00 FOR MOUNTING & LEVELING REQUIREMENTS.
3. REFER TO LANDSCAPE DETAILS FOR INSTALLATION OF PAVERS & INTERFACE BETWEEN PAVERS AND POLE BASE.

BOLLARD BASE DETAIL - PAVED AREAS

NTS

U.S. Department of Veterans Affairs

DETAIL TITLE / BOLLARD BASE DETAIL – PAVED AREAS

SCALE: NONE

DATE ISSUED: JULY 1, 2020 CAD DETAIL NO.: SD265600-04 DWG

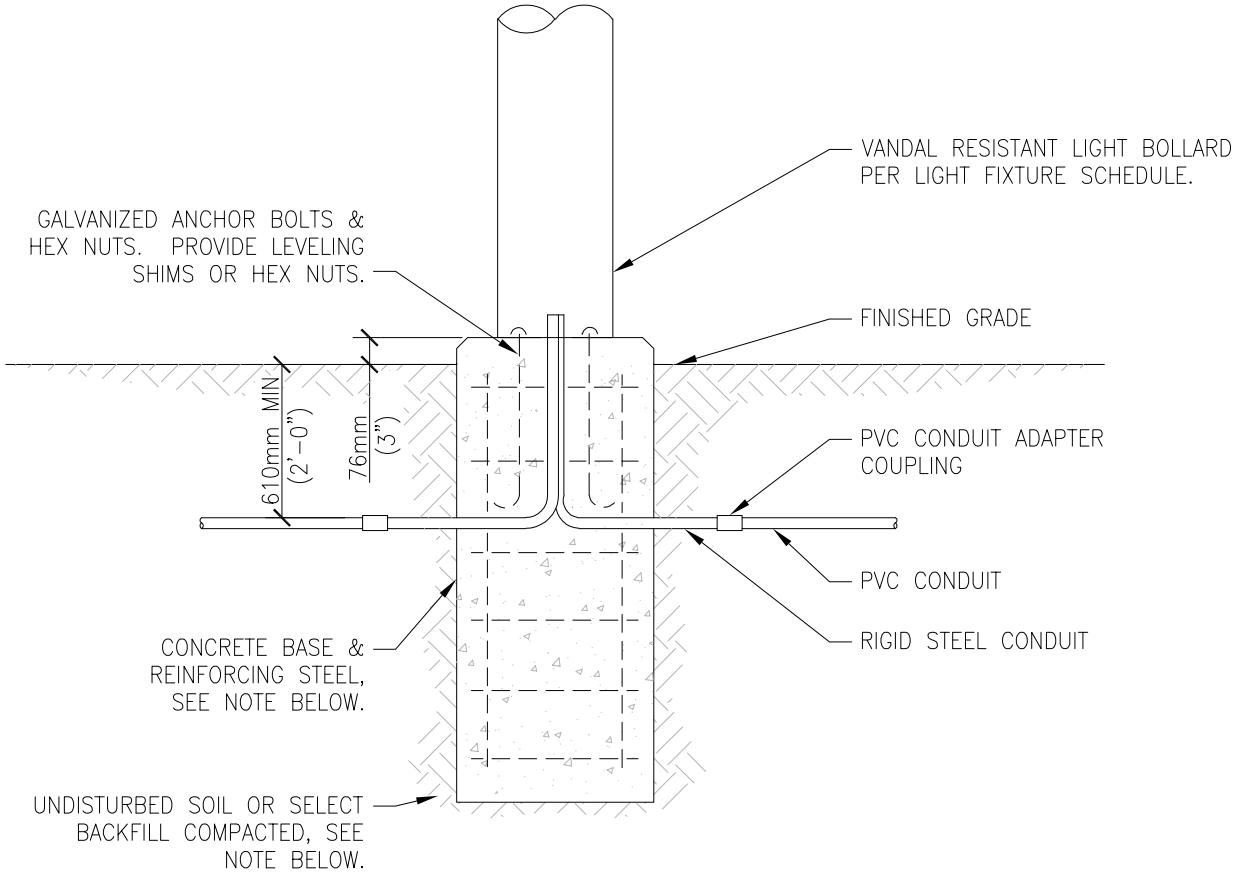

GENERAL NOTES:

1. BACKFILL, CONCRETE, REINFORCING STEEL, & ANCHOR BOLTS ARE SHOWN FOR REFERENCE ONLY. STRUCTURAL DESIGN IS SHOWN ON STRUCTURAL DRAWINGS.

2. REFER TO SPECIFICATION SECTION 26 56 00 FOR MOUNTING & LEVELING REQUIREMENTS.

BOLLARD BASE DETAIL - TURF AREAS

#

NTS

VA | U.S. Department of Veterans Affairs

DETAIL TITLE / BOLLARD BASE DETAIL – TURF AREAS

SCALE: NONE

DATE ISSUED: JULY 1, 2020 CAD DETAIL NO.: SD265600-05 DWG