ePayments User Guide (EDI Lockbox)

August 2011

Veterans Affairs
Product Development (PD)

(This page included for two-sided copying.)

		Revision History	
Date	**Revision**	**Description**	**Author**
8/01/2011	1.0	Initial	Berry Anderson

(This page included for two-sided copying.)

Table Of Contents

1. INTRODUCTION 1

1.1. BUSINESS USES' 1
1.2. TIMEFRAMES 1
1.3. PATCHES 2
1.3.1. IB*2.0*431 2
1.3.2. PRCA*4.5*269 2
1.4. NEW TERMINOLOGY 3
1.5. PROCESS FLOW 4
1.6. TRANSMITTING EEOBS BETWEEN SITES 7

2. GETTING STARTED WITH EPAYMENTS 9

2.1. MENUS AND SCREENS 9
2.2. PARAMETERS 14
2.3. MAIL GROUPS 14
2.3.1. How to read an ERA/835 14

3. PAYMENTS PROCESSING 19

3.1. CHECK EMAIL 19
3.2. EXCEPTION PROCESSING 20
3.2.1. Transmission Exceptions 20
3.2.2. Data Exceptions 22
3.3. WORKING THE EEOB WORKLIST 23
3.3.1. ERA List - Worklist Actions 26
3.3.2. Worklist Actions 30
3.3.3. Research Menu Actions 42
3.3.4. Example of processing a Paper Check and ERA 44
3.3.5. Example of processing a matched ERA and EFT 48

4. FMS 55

4.1. THREE DAY EFT CYCLE 55
4.2. EFT DEPOSITS 58

5. NPI 61

6. ADDITIONAL FUNCTIONALITY 63

6.1. AUTO–AUDIT 63
6.1.1. Update Rate Types For Auto-audit 63
6.2. AUTOMATIC MATCH EFTS TO ERAS ACRONYM: MA 64
6.3. MANUAL MATCH EFT-ERA ACRONYM: MM 64
6.4. MARK Ø-BALANCE EFT MATCHED ACRONYM: ZB 64
6.5. MOVE ERA TOTAL TO SUSPENSE ACRONYM: MO 64
6.6. UNMATCH AN ERA ACRONYM: UN 65
6.7. UPDATE ERA POSTED USING PAPER EOB ACRONYM: UP 65
6.8. MARK ERA RETURNED TO PAYER ACRONYM: RET 65

7. REPORTS 67

7.1. DAILY ACTIVITY REPORT ACRONYM: DA 67

7.1.1. When to run this report 67
7.1.2. How to run this report 67
7.2. EEOB TRANSFER REPORTS ACRONYM: TR 69
7.2.1. When to run this report: 69
7.2.2. How to run this report 69
7.3. EFT UNMATCHED AGING REPORT ACRONYM: EFT 69
7.3.1. When to run this report 70
7.3.2. How to run this report 70
7.4. ERA UNMATCHED AGING REPORT ACRONYM : ERA 71
7.4.1. When to run this report 71
7.4.2. How to run this report 71
7.5. UNAPPLIED EFT DEPOSITS REPORT ACRONYM: UN 73
7.5.1. When to run this report 73
7.5.2. How to run this report 73
7.6. ACTIVE BILLS WITH EEOB REPORT ACRONYM: AB 74
7.6.1. When to run this report 74
7.6.2. How to run this report 74
7.7. EFT DEPOSIT RECONCILIATION REPORT ACRONYM: DEP 75
7.7.1. When to run this report 75
7.7.2. How to run this report 75
7.8. VIEW/PRINT ERA ACRONYM: VP 76
7.8.1. When to run this report 76
7.8.2. How to run this report 76

8. ENHANCEMENTS TO NON-EDI LOCKBOX MENUS 79

8.1. AGENT CASHIER MENU 79
8.1.1. EX Extended Check/Trace/Credit Card Search and LP Link Payment 79

9. APPENDIX A – HELPFUL LINKS 81

10. APPENDIX B – CLAIM LEVEL ADJUSTMENT CODES 83

11. APPENDIX C – PROVIDER LEVEL ADJUSTMENT CODES 85

12. APPENDIX D - DEFINITIONS 89

13. APPENDIX E – 3RD PARTY EDI LOCKBOX BULLETINS 93

1. Introduction

1.1. Business Uses'

The Health Insurance Portability and Accountability Act of 1996 (HIPAA) or Public Law 101-191 requires healthcare plans and providers who conduct transactions electronically to comply with rules of standardization. HIPAA has several purposes but defines standards through rules and compliance of transactions and code sets. National standards allow for compatible formats between providers and third party payers. PNC Bank in Pennsylvania functions as the VA 3rd Party Lockbox bank and will accept those standard transactions from payers on behalf of VA. The bank makes a daily deposit of 3rd party payments to US Treasury. They will also transmit deposit information in the form of an Electronic Funds Transfer (EFT) and data about the payment in the form of an Electronic Remittance Advice (ERA) to the Austin Financial Services Center (FSC). The Austin FSC will accept those transactions from the bank and translate those files into a VistA readable format. The FSC will then forward those files to the appropriate VistA AR package by way of Mailman messages. In addition, the FSC will also transmit the ERA and EFT data files to EPHRA.

VistA, therefore, was enhanced to allow receipt processing and posting of electronic remittance data sent by payers. Additionally, VistA and FMS were enhanced to accommodate receipt and processing of 3rd party electronic payment data.

The ePayments software will supplement the current accounts receivable process by eliminating some data entry and automating the process of entering payments on a field service receipt. The software will now create an electronic receipt that replaces the paper field service receipt for payments received via the ePayments software.

1.2. Timeframes

The ePayments software was released to sites on October 10, 2003 with an installation compliance deadline of October 16, 2003. The payer community is working to make their transactions HIPAA compliant. Once payers are ready to transmit, they will work with our Lockbox Bank to enroll in the VA ePayments program. After enrolling, each payer will go through a rigorous transaction testing process with our Lockbox bank and any Clearinghouse that may be integrated. Testing ensures that the payer's 835 EFT and ERA transmissions:

1. Conform to acceptable HIPAA and X12 transaction standards and
2. Can be received and forwarded by internal VA processing and messaging systems.

The entire payer community was not expected to be ready to transmit immediately following the HIPAA deadline of October 16, 2003. Payer implementation is expected to be staggered but initially covered the payers with the highest VHA claim submission volume across each VISN. Sites should expect to continue with paper processing as the electronic payers are brought on line.

Since releasing the ePayments system, VHA has been honored by NACHA, the Electronic Payments Association, for its success in implementing a nationwide electronic health care remittance and payment processing system that complies with the electronic transaction standards of the HIPAAPNC Bank in Pittsburgh, Pennsylvania serves as VHA's lockbox bank and has partnered with VHA to enroll payers in this new, electronic business process. VHA's experience with payers has been positive with regard to the payer's capability to produce and transmit ERAs. However, less than one percent of VHA's active payers are producing and transmitting an EFT. While VHA's primary goal is to enroll its payer community for ERA, VHA believes that additional benefits of HIPAA will be realized through both ERA and EFT processing. Because HIPAA regulations specify that payers comply with a request for ERA in

response to a provider's claim, payers' business organizations may not be focused on the development of EFT.

1.3. Patches

Patches IB*2.0*431 and PRCA*4.5*269 have been developed to make the Integrated Billing (IB) and Accounts Receivable (AR) applications HIPAA 5010 (HIPAA II) compliant, and to address business needs of the Department of Veterans Affairs. In addition to defect corrections, system enhancements have been made to reduce the level of effort required for AR staff to process payments as well as to decrease user errors.

1.3.1. IB*2.0*431

HIPAA 5010 (HIPAA II) changes

- Modifications have been made to allow VistA to receive, process and display ERA/EEOB and MRA EOB data from FSC in HIPAA 5010 (HIPAA II) compatible format.

- Backward compatibility is supported to allow VistA to also receive messages in the existing HIPAA 4010 format.

- The data content of EEOB messages has been modified to meet HIPAA 5010 (HIPAA II) standard.

- Existing EOB Trace #, ICN and Contact Number fields have been extended in length and new fields are added for:
    - Claim Received Date
    - Coverage Expiration Date
    - Corrected Priority Payer Name and ID
    - Other Subscriber Name
    - Adjustment/Payer Policy Reference

1.3.2. PRCA*4.5*269

HIPAA 5010 (HIPAA II) changes

- Modifications have been made to the EDI Lockbox menu to allow VistA to receive, process, and display ERA, EFT and EEOB data from FSC in HIPAA 5010 (HIPAA II) compatible format. Backward compatibility is supported to allow VistA to also receive messages in the existing HIPAA 4010 format.

- The data content of ERA, EFT and EOB messages has been modified to meet HIPAA 5010 (HIPAA II) standard. Existing EFT/ERA Payer Name, Trace #, Contact Numbers, Rendering Provider and Adjustment Reference fields are extended in length and a new ERA field 'Payer Web Site Address' is also introduced.

Other Changes

Additional system modifications (outside of HIPAA 5010) (HIPAA II) are included which will enable automation of the labor intensive workarounds and minimize costly system errors.

- The PRCA NIGHTLY PROCESS batch job auto matches EFT and ERA transactions and updates receipts for the AR package. This process includes a purge of receipts which is extended by this release from one year's retention to seven years.
- The process for receiving EFT messages is modified to verify on date as well as ticket number. This allows 469 and 569 3rd Party ticket number ranges to be reused without being treated as duplicates.
- Minimum dollar amount of zero is enforced in Worklist adjustments.
- ERA numbers are no longer truncated in Worklist but are now displayed as the full 10 digits.
- 'Patient Charge Maintenance' option in the Worklist/Research Menu is replaced by the 'Administrative Charge Adjustment' option.
- Within TPJI (menu option [IBJI THIRD PARTY JOINT INQUIRY]) the Comment History sub option is modified to display contact details (including the new Payer Web Site field).

1.4. New Terminology

The following table of terms contains vocabulary that will be referenced throughout this document to describe the ePayments process.

EFT	Electronic Funds Transfer; the electronic form of what is currently sent as a paper check
ERA	Electronic Remittance Advice; the equivalent to a stack of paper Explanation of Benefits (EOB) statements for many patients from one payer
EEOB	Electronic Explanation of Benefits; one line item within an ERA
Trace Number	A number assigned by the insurance company to identify which EFT payment is associated with what ERA; used to re-associate electronic remittance payment with data

1.5. Process Flow

The following figure depicts a high level description of the ePayments process.

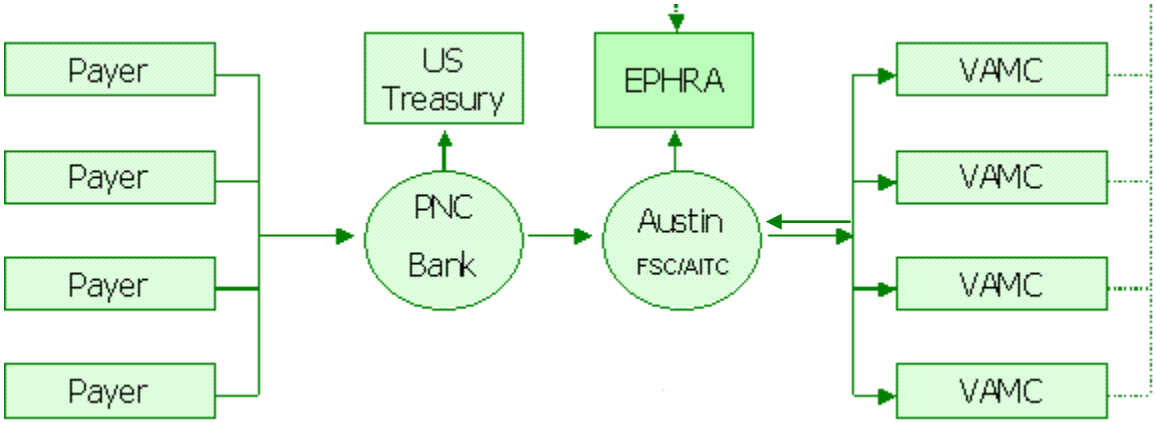

Figure 1 - ePayments High Level Process Flow

The data flow process will function as follows:

1. Electronic claims will be sent to the payer and the Clearinghouse will send a message to VistA Integrated Billing (IB), indicating that the claim passed all Clearinghouse validity edits and was forwarded to the payer. The message will initiate the auto-audit functionality that automatically audits the claim and sets it up as a receivable in VistA.
2. The payer adjudicates the claim and determines payment. The payment may be sent electronically to PNC Bank as an EFT or the payer may mail a paper check.
3. PNC Bank will send:
    a. EFT dollars directly to the U.S. Treasury,
    b. EFT 835 transactions, containing daily total deposit information by payer to the FSC, and
    c. ERA 835 transactions, containing electronic EOBs (EEOBs) to the FSC.
4. The FSC will pass EFT and ERA information on to each VAMC in flat file format via VistA Mailman messages. These messages are sent to the MLB mail group.
5. Additionally, the FSC will transmit the EFT and ERA flat file information to the EPHRA database
6. The FSC will also transmit unroutable EEOB data to EPHRA. Unroutable EEOB data does not contain the appropriate Tax ID information to allow the FSC to route it to the proper VistA AR system. FSC 224-Unit staff will monitor EPHRA for unroutable EEOB data and use other data identifiers, such as the bill number, to determine appropriate routing and transmit to the correct VistA AR system.

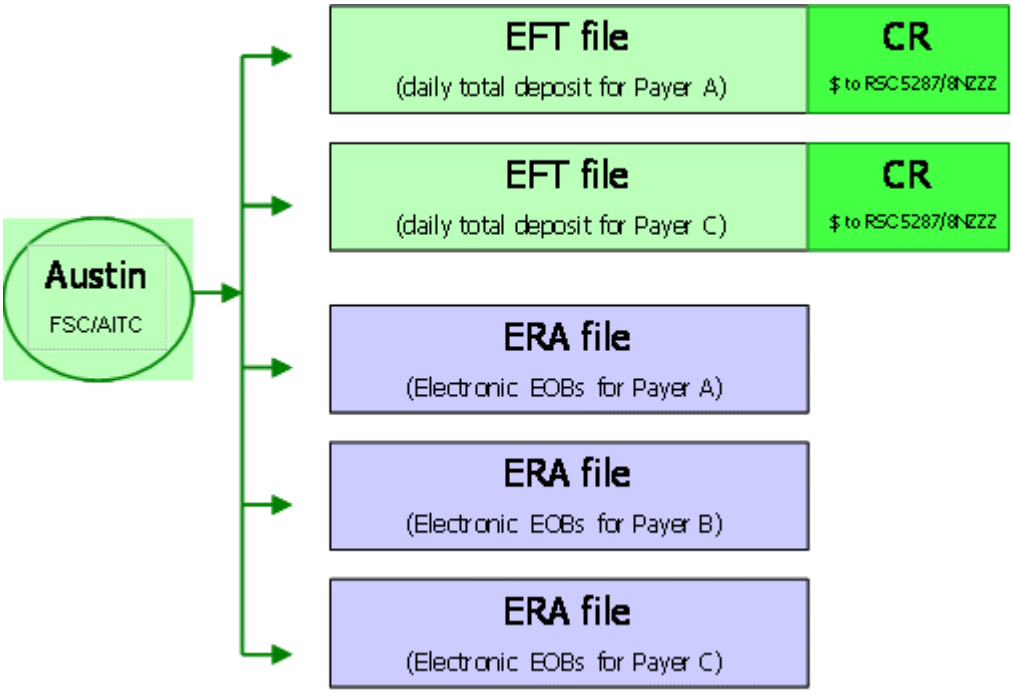

Figure 2 - EFT and ERA Storage Process in VistA

7. EFT data received by VistA initiates an automatic Credit Receipt (CR) document for each payment received within the deposit and puts the payment information into a separate appropriation fund that tracks payments not yet posted as part of the A/R nightly processing job. The Revenue Source Code (RSC) 8NZZ was created specifically for 3rd Party EFTs. (See Figure 2 - EFT and ERA Storage Process in VistA)

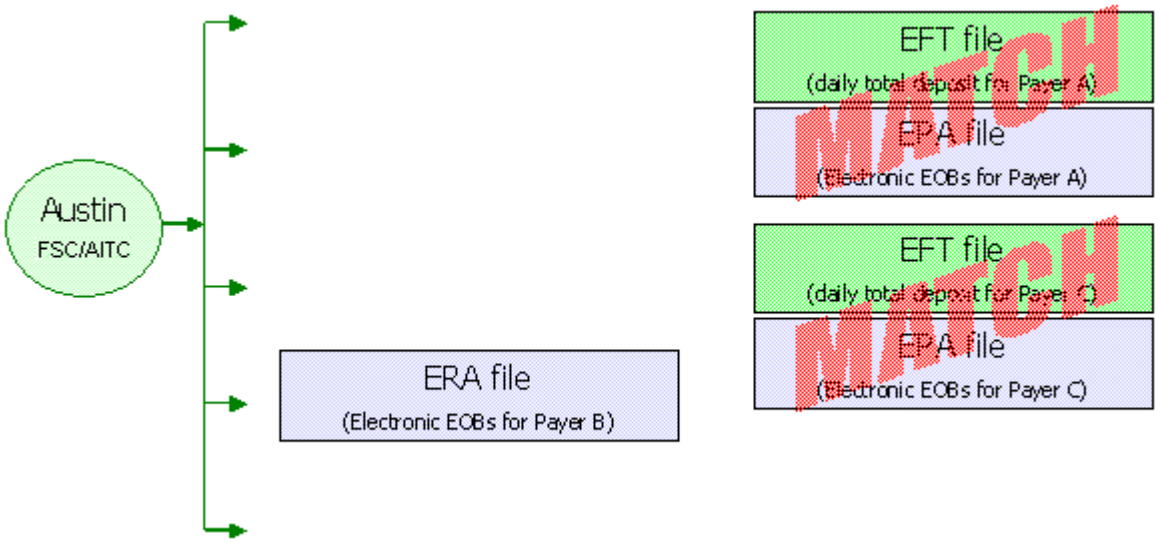

Figure 3 - ePayments Nightly Process

8. VistA runs a nightly process (see Figure 3 - ePayments Nightly Process) that matches ERAs to EFT files using the Trace Number and Insurance Company ID.
    a. If the system finds a match, it then verifies the amount matches. If the amount matches, the ERA and EFT detail records are automatically marked as "matched."
    b. If the amount does not match, the ERA record and the EFT detail record are marked as "matched with errors."
    c. If the system is not able to match an ERA with an EFT detail record, it is marked as "unmatched." It is most likely that this scenario will call for a match to a paper check or is a zero-payment.
9. When the ERA is received in VistA, it attempts to associate EEOBs with bills in the AR package and stores the details associated with the payer's adjudication decisions in Integrated Billing's EEOB file. This EEOB data is available for display under the BILL CHARGES action in THIRD PARTY JOINT INQUIRY.
    a. If any EEOBs cannot be associated with bills in VistA, a message will be sent to the RCDPE PAYMENTS EXCEPTIONS mail group. This message indicates that there is a problem with the bill number such as belongs to another site or the numbers were transposed.
    b. See Section 3.2 Exception Processing for instructions on transferring an EEOB to the appropriate site.
    c. If NONE of the EEOBs included in the ERA can be associated with a bill in VistA, a message will be sent to the RCDPE PAYMENT EXCEPTIONS mail group indicating there were no valid bills on the ERA for the site. This ERA is then rejected and is not stored at the site. Contact your ePayments POC for assistance if needed.
10. Members of the RCDPE Payments mail group receive the nightly processing bulletins.
11. Members of the RCDPE Payment Exceptions mail group will receive all bulletins for exception conditions or processing issues generated by the EDI Lockbox/ePayments message processor. Generally, an ePayments exception occurs when an EDI Lockbox message cannot be automatically or completely filed into the VistA AR and IB systems. When this occurs an exception record is created in Exception Processing. In order to address the transmission issues, you will access the Exception Processing function.
12. The user reviews all unposted ERAs and creates the EEOB Worklist Scratch Pad entries to make the necessary adjustments to balance the total of the EEOB with the total on the check or EFT. In order to use the worklist, ERAs with an unmatched status require matching to a paper check or marked as a zero pay.
13. Once the adjustments are made in the Worklist, the Receipt can be created automatically through a Worklist function. The receipt and any total balancing adjustments can be created manually.
14. The receipt can then be processed as normal through PR Process Receipt option.
15. For EFTs related to ERAs:
    After the receipt is processed and closed in VistA, the FMS transactions will be initiated. This means that a TR document is generated to FMS to transfer the monies from the new MCCF RSC 5287.4/8NZZ to the appropriate MCCF collection accounts under 5287. This TR document will also transfer any monies needing to be posted to the station suspense account or other accounts, due to non-MCCF billing/payments.

16. For ERAs related to paper checks:
    A CR document is generated to process the monies into FMS. This is the same processing as for current non-EDI Lockbox receipts.

17. If the ERA receipt is not created using the Worklist, then the ERA reference must be manually entered using the EDIT RECEIPT action in Receipt Profile. If the ERA is also associated with an EFT, the EFT reference must also be manually added using this action. This is extremely important because the receipt associated with an EFT will generate the appropriate TR documents to move the money out of 8NZZ and into the proper Fund/RSC whereas a receipt without an EFT referenced will generate a CR document and will expect the dollars on the receipt to be deposited by your site.

1.6. Transmitting EEOBs between Sites

Transfer of EEOBs between sites uses the existing functionality of the VistA MailMan system. If a site mistakenly receives an EEOB belonging to another site, that EEOB's data (**not the dollars**) may be transferred to the appropriate site through Mailman messaging. The institutional file (file 4) must have a domain set for the facility that the EEOB is being transferred to so the software knows where to send the information. Check with your local IRM to ensure the domain is set correctly.

When a site receives a transferred EEOB, a message is automatically returned to the transferring site to acknowledge the EEOB's receipt. The EEOB is then loaded into the receiving site's DATA EXCEPTIONS list. It must either be accepted as belonging to the site or rejected. In either case, another automated message is sent back to the transferring site with this information. On receipt of either of these 2 latter messages the transfer status of the individual EEOB detail record at the transferring site is updated with this information.

Transferring an EEOB to another site will be done according to the following process:

1. From the EEOB Data Exceptions List, locate the misrouted EEOB and select Transfer EEOB. This option can be found on the main EDI Lockbox menu option under the EDI Lockbox 3rd party Exceptions (EXC).

2. The system will prompt the user to select the EEOB Data Exception from the screen.

3. After the user enters the number of the EEOB Data Exception, the system will ask the user to which site the EEOB is to be transferred. The user will select from a list of site names and numbers and enter the information after the screen prompt. Remember only the sites that have the domain set correctly, as referenced above, will show at this prompt.

4. The system then allows the user to enter 45 characters for comment to indicate who at the other site should be contacted with regard to the transferred EOB. The user can enter a name and telephone number. The default for this is the agent cashier's information as set up the IB Site Parameters.

5. The system then asks the user if the EEOB should be printed. The user can enter his or her preference.

6. After the transfer is made, the system will transmit the EEOB record by Mailman to the other site. The user's screen will show that the transfer was made but not yet acknowledged by the receiving site. An EEOB Transfer moves the data only and not the associated dollars. To transfer money, the user must perform a TDA or Journal Voucher.

7. The receiving site automatically sends an acknowledgement receipt for the transferred EEOB back to the originating site when mailman successfully delivers it. In addition, the receiving site's RCDPE PAYMENTS mail group receives a bulletin alerting them to the existence of the transferred in EEOB. The EEOB will appear as a TRANSMISSION EXCEPTION in

EXCEPTION PROCESSING. This site must review the transferred in EEOB and accept it as theirs by using the FILE MESSAGE action and selecting the EEOB exception record or reject it by using the DELETE MESSAGE action and selecting the EEOB exception record. Either action removes it from the receiving site's TRANSMISSION EXCEPTION list. If the EEOB is accepted, the EEOB will automatically be removed from the originating site's Exception List and a bulletin will be sent to the RCDPE PAYMENT MGMT mail group to notify them that the funds must be manually transferred for the transferred EEOB. If rejected, the status of the EEOB at the originating site is updated to indicate this. A bulletin is sent to the RCDPE PAYMENTS mail group to report the rejected EEOB transfer. The EEOB can then be transferred to another site.

2. Getting started with ePayments

2.1. Menus and Screens

A new list manager screen, the ERA List – Worklist screen (a.k.a. “pick list”), has been added in order to display the selection of ERAs to be worked.

The selections that the user makes when defining the ERAs to be included in the list will display in the header information on this screen. The following information is available in the body of the ERA List – Worklist screen:

1. Sequence #
2. ERA #
3. Trace #
4. Payer Name
5. Match Status
6. ERA Paid Date
7. Total Amount Paid
8. Date Received

```
ERA List - Worklist           Jul 22, 2010@17:37:06          Page:    1 of    3
SELECTED:  MATCH STATUS: BOTH           POST STATUS: UNPOSTED
           DATE RANGE  : NONE SELECTED
           ALL PAYERS
#   ERA #         TRACE#
            PAYER NAME/MATCH STATUS         ERA PAID DT  TOT AMT PAID   DT REC'D
1    1          12345
                                          10/29/02          20.00      10/29/02
            IBinsurance Company One         APPROX # EEOBs: 1
            MATCHED TO PAPER CHECK          EFT RECEIPT STATUS: NOT ENTERED

2    1234567891  TEST123
                                         6/8/10          3456.78       6/8/10
            IBinsurance Company Two         APPROX # EEOBs: 1
            MATCHED TO PAPER CHECK          (CHECK PAYMENT CHOSEN)

3    9876543210  01234567890123456789012345678901234567890123456789
                                        7/21/10           123.45       7/21/10
            IBinsurance Company Three       APPROX # EEOBs: 1
            MATCHED TO PAPER CHECK          (CHECK PAYMENT CHOSEN)
+          '-' Before the ERA # indicates no scratchpad entry
    Select ERA                 View/Print ERA            Exit
    Sort List                  Hide/Display Batch
Select Action: Next Screen//
```

The EEOB Worklist/Scratchpad is a new option that has been created for the ePayments system. It allows the user to select an ERA and view the detailed EEOB records associated with the ERA.

The following information is available from the EEOB Worklist/Scratchpad:

For the entire ERA:

1. ERA Entry #
2. Payer Name/ID
3. Total Amt Paid
4. Paper Check # or EFT Trace #
5. Total amount to be posted to the receipt

```
EEOB Worklist/Scratch Pad     Jul 21, 2010@12:17:58          Page:    1 of    1
ERA Entry #: 9876543210        Total Amt Pd: 123.45
Payer Name/ID: IBinsurance Company One/55555555
PAPER CHECK #: 1003
_____________________________________________________________________________
1       EEOB Seq # On ERA: 1   Net Payment Amt: 123.45
       1.001 Claim #: KXXXXXX Patient/Last 4: IBpatient,One A/5555
         Claim Bal: 0.00   Billed Amt: 0.00   Amt To Post: 123.45
         Svc Dt: 6/1/00  COB: NO   Rx Copay: UNKNOWN  Means Tst: ??
         Payment Amt: 123.45   Total Adjustments: 0.00  Net: 123.45
.............................................................................




          Enter ?? for more actions
    Split/Edit A Line         Look At Receipt       EOB View/Print EEOB
    Distribute Adj Amts       Review Line           ERA View/Print ERA
    Refresh Scratch Pad       Batch Maintenance         Exit
    Research Menu             Verify
Select Action: Next Screen//
```

For the EEOB detail:

1. Bill number
2. Patient Priority Status (CAT C)
3. Rx Copay exempt status
4. Date of service
5. Billed amount
6. Claim balance (current balance)
7. Patient last name
8. Last 4 digits of the patient's SSN
9. Paid amount (amt to post)
10. COB status
11. Line item number from the ERA
12. ERA level and Claim level Adjustment totals

13. Comment Date and Time (stamp)
14. (Comment) User Name

```
EEOB Worklist/Scratch Pad     Jul 21, 2010@12:17:58          Page:    1 of    1
ERA Entry #: 9876543210        Total Amt Pd: 123.45
Payer Name/ID: IBinsurance Company One/55555555
PAPER CHECK #: 1003

1       EEOB Seq # On ERA: 1   Net Payment Amt: 123.45
       1.001 Claim #: KXXXXXX Patient/Last 4: IBpatient,One A/5555
         Claim Bal: 0.00   Billed Amt: 0.00   Amt To Post: 123.45
         Svc Dt: 6/1/00  COB: NO   Rx Copay: UNKNOWN  Means Tst: ??
         Payment Amt: 123.45   Total Adjustments: 0.00  Net: 123.45
_____________________________________________________________________.




          Enter ?? for more actions
    Split/Edit A Line         Look At Receipt       EOB View/Print EEOB
    Distribute Adj Amts       Review Line           ERA View/Print ERA
    Refresh Scratch Pad       Batch Maintenance         Exit
    Research Menu             Verify
Select Action: Next Screen//
```

The list manager EEOB Worklist will allow the user to perform the following actions:

1. Split/Edit A Line
2. Distribute Adj Amts
3. Refresh Scratch Pad
4. Research Menu
5. Look At Receipt
6. Review Line
7. Batch Maintenance
8. Verify
9. View/Print EEOB
10. View/Print an ERA
11. Exit

```
EEOB Worklist/Scratch Pad     Jul 21, 2010@12:17:58          Page:    1 of    1
ERA Entry #: 9876543210        Total Amt Pd: 123.45
Payer Name/ID: IBinsurance Company One/55555555
PAPER CHECK #: 1003

1       EEOB Seq # On ERA: 1   Net Payment Amt: 123.45
       1.001 Claim #: KXXXXXX Patient/Last 4: IBpatient,One A/5555
         Claim Bal: 0.00   Billed Amt: 0.00   Amt To Post: 123.45
         Svc Dt: 6/1/00  COB: NO   Rx Copay: UNKNOWN  Means Tst: ??
         Payment Amt: 123.45   Total Adjustments: 0.00  Net: 123.45
```

```
.......................................................................
                                                                      
                                                                      
                                                                      
          Enter ?? for more actions
    Split/Edit A Line         Look At Receipt       EOB View/Print EEOB
    Distribute Adj Amts       Review Line           ERA View/Print ERA
    Refresh Scratch Pad       Batch Maintenance         Exit
    Research Menu             Verify
Select Action: Next Screen//
```

The expanded Look At Receipt action (previously named PREVIEW RECEIPT) will yield the Preview/Create Receipt screens, and allows the following actions to be performed:

1. Select option LOOK AT RECEIPT
2. CREATE RECEIPT (which will allow a link to the RECEIPT PROCESSING function if the receipt is created without errors)

```
EEOB WORKLIST PREVIEW RECEIPT Jul 21, 2010@08:43:02          Page:    1 of    1
ERA Entry #: 9876543210        Total Amt Pd: 20.59
Payer Name/ID: IBinsurance Company One/55555555
PAPER CHECK #: 1003
 LINE #     ACCOUNT                        AMOUNT
PAYMENTS (LINES FOR RECEIPT):
 1.001      XXX-KXXXXXX                    20.59 
                                                 
                                                 
                                                 
                                                 
                                                 
                                                 
                                                 
                                                 
                                                 
          Enter ?? for more actions
  Print Receipt Preview     Create Receipt            Exit
Select Action: Quit//
```

The expanded Batch Maintenance action includes additional functions that are used to further define the ERA:

1. EDIT BATCH (locked with key PRCA ERA BATCH MAINTENANCE)
2. NEW BATCH ASSIGNMENT (locked with key PRCA ERA BATCH MAINTENANCE)
3. MARK ALL READY TO POST (locked with key PRCA ERA BATCH MAINTENANCE)
4. BATCH SUMMARY REPORT (locked with key PRCA ERA BATCH MAINTENANCE)

The new Verify option will provide functionality needed to identify and mark unverified EEOBs:

1. MANUAL MARK AS VERIFIED
2. REPORT OF UNVERIFIED WITH DISCREPANCIES

```
VERIFY EEOBs:
          1     MANUAL MARK AS VERIFIED
          2     REPORT OF UNVERIFIED WITH DISCREPANCIES
          3     QUIT AND RETURN TO WORKLIST

Select Action: QUIT//
```

The Research Menu is accessible through the list manager EEOB Worklist screen and it allows the following actions to be performed:

1. Release hold
2. Adjust <Inc/Dec>
3. Full Acct Prof
4. Admin Cost Adj
5. TPJI (Third Party Joint Inquiry)
6. On Hold List
7. Claims Match Rpt
8. Bill Comment Log
9. Re establish Bill
10. View/Print EEOB
11. Review Line
12. Scratchpad Menu/Exit

```
EEOB Worklist Research          Aug 10, 2010@11:01:33           Page: 1 of       2
ERA Entry #: 5                    Total Amt Pd:  509.61
Payer Name/ID: IBinsurance Company One/5555555555
PAPER CHECK #: 55555-55555555
_____________________________________________________________________________
1      (V) EEOB Seq # On ERA:  1  Net Payment Amt:  0.00
         1.001 Claim #: KXXXXXX Patient/Last 4: IBpatient,One A/5555
           Claim Bal: 0.00  Billed Amt: 19.47  Amt to Post: 0.00
            Svc Dt: 1/27/03 COB: NO    Rx Copay: NON-EXEMPT   Means Tst: ??
           Payment Amt: 0.00  Total Adjustments: 0.00  Net: 0.00
.............................................................................
2      (V) EEOB Seq # On ERA:  3  Net Payment Amt: 509.61
         2.001 Claim #: KXXXXXX  Patient/Last 4: IBpatient,Two A/4444
           Claim Bal: 509.61 Billed Amt: 559.61 Amt To Post: 509.61
           Svc Dt: 2/4/03  COB: NO    Rx Copay: NON-EXEMPT  Means Tst: NO
           Payment Amt: 590.61 Total Adjustments: 0.00  Net: 509.61
.............................................................................
+      Enter ?? for more actions
```

```
   Release Hold                    TPJI                      Re establish Bill
   Adjust (Inc/Dec)                On Hold Lost              View/Print EEOB
   Full Acct Prof                  Claims Match Rpt          Review Line
   Admin Cost Adj                  Bill Comment Log          Scratch Pad Menu/Exit
Select Action: Next Screen//
```

All of the menus will be described in detail in Section 3 Payments Processing.

2.2. Parameters

Two new parameters have been added as a part of the ePayments software. Those parameters are:

1. **New Site Parameter – Aging Payments**
   This parameter allows the user to select the specified number of days that will elapse before an unmatched payment (for an EFT detail line) will be reported. This parameter will be used when the report is run as part of the nightly processing. At installation, the Report Aging Payments site parameter will default to five days.

2. **New Site Parameter – Aging ERA**

   This parameter allows the user to select the specified number of days that will elapse before an unmatched ERA will be reported. This parameter will be used when the job is run as part of the nightly processing. At installation, the Report Aging ERA site parameter will default to seven days.

2.3. Mail groups

Four new mail groups have been added for Lockbox. The names of these mail groups are:

RCDPE PAYMENTS: This group will receive all reports and bulletins generated by the nightly processing job and from all other EDI Lockbox jobs except for those resulting from exceptions found when storing the EDI Lockbox transmission records. An example would be the Daily Activity Report.

- **RCDPE PAYMENTS EXCEPTIONS**: This group will receive all bulletins for exception conditions generated by the receipt of all EDI Lockbox electronic messages. Exceptions occur when the software cannot identify a bill number in the site's VistA system.

- **RCDPE PAYMENTS MGMT**: This group will receive the bulletin that is sent when an EEOB transferred out of the site is accepted by another site.

MLB: This mail group receives all transmission messages relating to EDI Lockbox. These messages contain the detailed transmission data.

It is a local decision as to who will be members of these mail groups. It is recommended at a minimum that the MCCF Supervisor or Lead AR be included. **Important: The electronic data is sent to VistA thru these mail man messages. If no one is assigned to these mail groups, the electronic data will not be stored in VistA. These messages also help with trouble shooting and problem solving.** Appendix E contains a list of the bulletins and recommendations on how to handle each message.

2.3.1. How to read an ERA/835

The 835 is a transaction set created by HIPAA standards. The transaction format defines what data should be included in the Electronic Remittance Advice (ERA) for use in the world of Electronic Data Interchange (EDI). '835' is the technical term used in the healthcare industry when referring to an ERA –

Electronic Remittance Advice. ERAs or 835's can be found in the ePayments software in the worklist, view/print options, or under Billed Charges (BC) in the TPJI menu. ERA's are sent in a standard format as defined by HIPAA and include standard Claim adjustment reason codes (CARC's).

```
                EDI LOCKBOX EEOB DETAIL FROM WORKLIST   7/22/10        Page: 1

 ERA NUMBER: 9876543210  ERA DATE: Jul 21, 2010
INS COMPANY: IBinsurance Company One/555555555
ERA TRACE #: 1234567890123456789012345678901234567890123456789

==============================================================================

CLAIM #: XXX-KXXXXXX
EOB GENERAL INFORMATION:
 Type        : NORMAL EOB                EOB Paid DT  : 12/21/07
 Entry Dt/Tm :12/24/07 4:33 pm           Claim Status : PROCESSED
 Entry Dt/Tm :12/24/07 4:33 pm           Review Status: ACCEPTED-COMPLETE EOB
 Entered By  :                           Insurance Seq: SECONDARY
 Last Edited : 12/24/07 7:06 am          Last Edit By : POSTMASTER
 Patient Name: IBpatient,One             Pt. Relation : PATIENT
 Insured Name: IBpatient,One             Insured ID   : SUBSC ID XXXXXX
 Claim Rec'd Date     :
 Other Subscriber Name:


Enter RETURN to continue or '^' to exit:
```

The example above shows the user the ERA number, trace number and date, and payer information. This is on page 1 of the ERA.

```
                EDI LOCKBOX EEOB DETAIL FROM WORKLIST   7/22/10        Page: 1

 ERA NUMBER: 9876543210  ERA DATE: Jul 21, 2010
INS COMPANY: IBinsurance Company One/555555555
ERA TRACE #: 1234567890123456789012345678901234567890123456789
==============================================================================

CLAIM #: XXX-KXXXXXX
EOB GENERAL INFORMATION:
 Type        : NORMAL EOB                EOB Paid DT  : 12/21/07
 Entry Dt/Tm :12/24/07 4:33 pm           Claim Status : PROCESSED
 Entry Dt/Tm :12/24/07 4:33 pm           Review Status: ACCEPTED-COMPLETE EOB
 Entered By  :                           Insurance Seq: SECONDARY
 Last Edited : 12/24/07 7:06 am          Last Edit By : POSTMASTER
 Patient Name: IBpatient,One             Pt. Relation : PATIENT
 Insured Name: IBpatient,One             Insured ID   : SUBSC ID XXXXXX
 Claim Rec'd Date     :
 Other Subscriber Name:


Enter RETURN to continue or '^' to exit:
```

Also included on page 1 is the bill number, patient name, ID number, claim status, and patient relationship.

```
                EDI LOCKBOX EEOB DETAIL FROM WORKLIST    7/22/10       Page: 2

 ERA NUMBER: 9876543210  ERA DATE: Jul 21, 2010
INS COMPANY: IBinsurance Company One/555555555
ERA TRACE #: 1234567890123456789012345678901234567890123456789
================================================================================
PAYER INFORMATION:
 Payer Name   : IBinsurance Company One
 Payer Id     : 5555555555
 ICN          :

 Contact Phone  : 555-555-5555
 Contact e-Mail : XXXXX@XXXXXXX.com
 Payer Web Site : http://www.WebSite.com
 Policy Reference: XXXXXXXXXXXXXXXXXXXXXXXXXXXXXXXXXXXXXXXXXXXXXXXXXXXXXXXX
 XXXXXXXXXXXXXXXXXXXXXXXXXXXXXXXXXXXXXXXXXXXXXXXXXXXXXXXXXXXXXXXXXXXXXXXXX
 Cross Ovr ID : XXXXXXXXX
 Cross Ovr Nm: XXXXXXXXXXXXXXX


Enter RETURN to continue or '^' to exit:
```

The User see the Payer Information including payer name, payer ID number, and the payers Internal Control Number (ICN) and any other claim level contact information on page 2. The claim level contact information can also be viewed from the Claim Information -> Comment History option available under TPJI. TPJI is available through many menu paths, such as EDI Lockbox -> EEOB Worklist -> Select ERA -> Research Menu -> TPJI.

```
                EDI LOCKBOX EEOB DETAIL FROM WORKLIST    7/22/10       Page: 3

 ERA NUMBER: 9876543210  ERA DATE: Jul 21, 2010
INS COMPANY: IBinsurance Company One/555555555
ERA TRACE #: 1234567890123456789012345678901234567890123456789
================================================================================
CLAIM LEVEL PAY STATUS:
 Tot Submitted Chrg:     102.95         Covered Amt       :       0.00
 Payer Paid Amt    :      20.59         Patient Resp. Amt :       0.00

CLAIM LEVEL ADJUSTMENTS:
 NONE

MEDICARE INFORMATION:
  NONE
LINE LEVEL ADJUSTMENTS:
  #   SV DT   REVCD  PROC  MOD  UNITS  BILLED  DEDUCT  COINS    ALLOW     PYMT
  1 06/01/10    510 99213          1   102.95    0.00   0.00   102.95    20.59
ADJ: CO  23  Payment adjusted because charges have been paid by another payer.
ADJ AMT: 82.36
```

The top of page 3 shows the user the submitted charges, covered amount, and amount paid in the Claim Level Pay status section of the ERA.

```
                EDI LOCKBOX EEOB DETAIL FROM WORKLIST    7/22/10       Page: 3

 ERA NUMBER: 9876543210  ERA DATE: Jul 21, 2010
INS COMPANY: IBinsurance Company One/555555555
ERA TRACE #: 1234567890123456789012345678901234567890123456789
================================================================================
CLAIM LEVEL PAY STATUS:
 Tot Submitted Chrg:     102.95         Covered Amt       :       0.00
 Payer Paid Amt    :      20.59         Patient Resp. Amt :       0.00

CLAIM LEVEL ADJUSTMENTS:
 NONE

MEDICARE INFORMATION:
  NONE
LINE LEVEL ADJUSTMENTS:
  #   SV DT   REVCD  PROC  MOD  UNITS  BILLED  DEDUCT  COINS    ALLOW     PYMT
  1 06/01/10    510 99213          1   102.95    0.00   0.00   102.95    20.59
ADJ: CO  23  Payment adjusted because charges have been paid by another payer.
ADJ AMT: 82.36

Enter RETURN to continue or '^' to exit:
```

At the bottom of page 3, the user can see the Claim Adjudication details which include the HIPAA standardized justification codes. Adjudication details can be continued on page 4 depending on the number of procedures included on the claim to the payer.

(This page included for two-sided copying.)

3. Payments Processing

Daily activities related to processing ePayments are included in this section of the User's Guide. It is organized by how the daily workflow should be processed – starting with checking e-mail and processing exceptions before beginning proceeding to the EEOB Worklist activities.

3.1. Check Email

The 3rd Party EDI Lockbox software makes extensive use of e-mail bulletins to alert users about actions taken during the nightly processing of EFTs and ERAs received from payers. Check e-mail for these notifications first thing in the morning to help plan the workday. If you receive a bulletin that states an ERA was rejected because no valid EEOBs were found for your site, you should contact your ePayments POC for assistance to ensure that no data is lost.

Starting with the Clerk's AR Menu, the user must navigate through two screens in order to access the functionality that is contained in the EEOB Worklist/Scratchpad:

```
          Audit/Set up a New Accounts Receivable ...
          New Bill Forms Print ...
          Profile of Accounts Receivable
          Update Accounts Receivable ...
          Adjustment to Accounts Receivable ...
          Report Menu for Accounts Receivable ...
          Follow-up Letter Menu ...
          Establish/Edit Old Bills ...
          Transaction Profile
   TPJI   Third Party Joint Inquiry
          Account Management ...
          Agent Cashier Menu ...
          EDI Lockbox ...
          FMS Utilities Menu ...
          Refund Review and Approve

 Select Clerk's AR Menu Option:
```

```
Select Clerk's AR Menu Option: edi Lockbox


   EXC    EDI Lockbox 3rd Party Exceptions
   MA     Automatic Match EFTs to ERAs
   MM     Manual Match EFT-ERA
   MO     Move ERA Total To Suspense
   REP    EDI Lockbox Reports Menu ...
   RET    Mark ERA Returned To Payer
   UN     Unmatch An ERA
   UP     Update ERA Posted Using Paper EOB
   WL     EEOB Worklist
   ZB     Mark 0-Balance EFT Matched

 Select EDI Lockbox Option:
```

3.2. Exception Processing

Before starting to process anything on your EEOB Worklist, check for exceptions by using the option **`EXC  EDI Lockbox 3rd Party Exceptions`** located on the EDI Lockbox Menu. Any ERA or EEOB that cannot be automatically and completely matched into both the VistA AR and IB packages will end up on the Exception Report. This includes those EEOBs received via a transfer from another site and also ERAs with recognized errors that prevent a clean update to automatically occur. Records can be viewed and various options are provided to reconcile the exceptions and move them to the EEOB Worklist for processing. Details for processing the exceptions are included below.
There are two types of exceptions, Transmission Exceptions and Data Exceptions, explained below.

Exceptions should be worked daily and before the scratchpad is created for the ERA.

3.2.1. Transmission Exceptions

Transmission Exceptions occur when there was a problem storing ERA EEOB data. Here are three examples of when a transmission error may occur:

1. An EEOB has been transferred into the site from another site that received it in error.

   In this example you can **File Message** to accept EEOB and file data in IB. When you do this a mailman message is sent to the sender and exception is removed from that site's exception list. Or, you can **Delete Message** to reject an EEOB that does not belong to your site. When you do this, a mailman message is sent to sender.

2. All sequences for an ERA that was sent in multiple messages were not received at the site.

   For example, AR cannot process these until ALL of the messages in the batch are received. The exception list contains only 4 of 5 messages. You should wait for the 5th message. If the message is not received in 24 hours, contact EPS at 1-888-596-4357 to enter a remedy ticket and request a re-transmission.

3. An ERA transmission did not fully complete the permanent update process on a previous date and remains in the file, partially processed. How is this corrected? Enter a remedy ticket, as this is probably the result of a system problem. Once the problem has been resolved, use File Message to process the ERA. Or, if the problem is severe and cannot be resolved, you will be instructed to use DELETE MESSAGE to permanently remove the message from the list.

4. An ERA cannot identify any claims on the transmission as valid at your station. In Version 1, this information was sent to the sites via e-mail messages. The information contained in the e-mail messages is now stored under the Transmission Exceptions until filed and corrected/saved or deleted.

```
EEOB TRANSMISSION EXCEPTIONS  Jul 01, 2010@10:41:30          Page:    1 of    1
                      ERA/EEOB MESSAGES WITH EXCEPTION CONDITIONS

  #   Message ID            Msg Typ  Date Received         Mail Msg #
_____________________________________________________________________________
1     XXXXXXX               ERA      MAR 05, 2007@18:41    XXXXXXX
    EXCEPTION: NO VALID CLAIMS
      Payer Name: IBinsurance Company One
      Payer ID: 5555555555
      Trace #: XXXXXXXXXXX
      Date Paid: 03/02/2007    Total Amt Paid: 22.39
          *XXXKXXXXXXX




          Enter ?? for more actions
    View/Print Message        Delete Message            Exit
    File Message              TPJI
Select Action: Quit//
```

Figure 3a – Sample Transmission Exception Report

3.2.1.1.Processing Actions for Transmission Exceptions

```
          Enter ?? for more actions
    View/Print Message        Delete Message            Exit
    File Message              TPJI
Select Action: Quit//
```

List Manager options are used to complete the transmission exceptions. Each option is explained in detail below.

- *View/Print Message* – Used to print or view the formatted version of the message and optionally includes the actual text (raw data) received in the message.
- *File Message* – Used to attempt to re-file a message. This could be used if the message was not completely stored in the permanent ELECTRONIC REMITTANCE ADVICE file or, to accept an EEOB transferred in from another site. When the user selects a message to re-file, the system checks the content of the message and tries to automatically file the data in VistA. If successful, the exception is removed. A bulletin is sent to the RCDPE PAYMENTS mail group reporting the attempt to re-file the message.

  If this action is used to accept an EEOB from another VA facility, it will also send a mailman message confirming acceptance back to the site the EEOB was transferred from.

  If this action is used with a NO VALID CLAIMS transmission, the exception will be moved to the data transmissions screen where the claim numbers can be edited and the EEOBs filed in IB.
- *Delete Message* – Used to remove the message from the exception list if the message cannot be re-filed into VistA automatically. This action removes the message permanently from the

exception list and sends a bulletin to the RCDPE PAYMENTS Mail Group containing the text of the message received.

If the site receives an EEOB transferred in from another site and determines it does NOT belong to the site, using this option deletes the transferred in EEOB message and sends an automatic EEOB rejected bulletin back to the site the EEOB was transferred from.

- *TPJI (Third Party Joint Inquiry)* – This is a link to TPJI in case further analysis of the site's receivables is required.

3.2.2. Data Exceptions

A Data Exception occurs when AR cannot match the claim number on the EEOB with a claim number in AR. There are two examples of Data Exceptions

- An EEOB that may belong to another site has been detected

If an EEOB has been sent to your site in error, the **Transfer EEOB** function should be used to send it to the correct site. To view EEOBs transferred out and/or transferred in, use the EEOB Transfer Reports option.

- An EEOB has encountered an error such as a typo or transposed bill number, the action called **Edit a Claim #** can be used to correct this error.

```
LOCKBOX EEOB DATA EXCEPTIONS  Oct 13, 2010@15:38:12          Page:    1 of    1
                    EEOB DETAIL DATA WITH EXCEPTION CONDITIONS
  #   Trace #                                                      EOB Date
        Insurance Co Name/ID
1     XXXXXXXX                                                     XX/XX/XX
        IBinsurance Company One/555555555
      Seq #: 49   Bill: *442-XXXXXXX  Pt: IBpatient,One A      Pd: 1.82
          Transferred To: FORT COLLINS  On: 9/15/10@18:34
          **Exception: VALID BILL NOT FOUND (TRANSFER NOT ACKNOWLEDGED)









          Enter ?? for more actions
    View/Print Message        Transfer EEOB             Exit
    File EEOB in IB           Edit Claim #
    Remove Exception          TPJI
Select Action: Quit//
```

Figure 3b – Sample Data Exception Report

3.2.2.1.Processing Actions for Data Exceptions

```
          Enter ?? for more actions
    View/Print Message        Transfer EEOB             Exit
    File EEOB in IB           Edit Claim #
    Remove Exception          TPJI
Select Action: Quit//
```

List Manager options are used to complete the data exceptions. Each option is explained in detail below.

- *View/Print Message* - Used to print or view the exception message and any detail on file for it.
- *File EEOB in IB* - Used to attempt to re-file the EEOB data detail in IB (Integrated Billing) if an exception occurred during a previous update attempt.
- *Remove Exception* - Used if there is no electronic way to resolve the exception condition. This action marks the ERA or EEOB detail record so it no longer appears as an exception. A bulletin will be sent to report this action to the RCDPE PAYMENTS mail group. If an exception is removed, the EEOB will appear in the worklist as 'not found in AR'
- *Transfer EEOB* - Used to transfer an EEOB for an individual bill that belongs to another site. Select the EEOB record, select the site to send it to, the phone number of the contact at your site (in case the other site has questions), and if the EEOB should be printed and if so, where to print it. This sends the EEOB data to the selected site and prints the EEOB detail locally if this option was selected.
- *Edit A Claim #* - Used to update the claim number to reflect the correct claim number you want to file the EEOB. TPJI can be used to view the claim detail before changing the claim number. *Special Note*: This function actually REMOVES the old claim number from the EEOB Worklist and REPLACES it with the new one. If this change is made in the Worklist, the original number remains on the EEOB and the new number also references the EEOB. It is cleaner to do it here than the Worklist if the error is simply that the wrong bill # was reported paid.
- *TPJI (Third Party Joint Inquiry)* – This is a link to TPJI in case further analysis of the site's receivables is required.

3.3. Working the EEOB Worklist

The EEOB Worklist is a list of electronic EOB (EEOB) detail records that were included on a selected electronic remittance advice (ERA). It allows for the creation of a receipt that will post each payment contained in each EEOB against the site's A/R and send to FMS. To accomplish this, some manipulation of the payment data may be necessary. The EEOB Worklist contains the tools for performing these manipulations (i.e. distribute adjustments, split/edit a payment, etc.).

Once the WL EEOB Worklist option above has been selected, the process begins with a series of questions that determines the ERA (ERAs) that is (are) available to be processed. The initial prompt asks if one wants to work with a list of ERAs or a specific one, after which the user will be prompted to select additional parameters that will define the list of ERAs:

ERA Posting Status:

- UNPOSTED – ERA/Receipt has **not** been posted to FMS
- POSTED - ERA/Receipt **has** been posted to FMS

ERA-EFT Match Status:

- NOT MATCHED – ERA has **not** been matched with an EFT (automatically by nightly job) – or – ERA has **not** been matched with a paper check by user - or - ERA has **not** been matched with a Ø -payment by the user

- MATCHED - ERA **was** matched with an EFT (automatically by nightly job) – or – ERA **was** matched with a paper check by user) – or – ERA **was** matched with a Ø-payment by user
- BOTH – list both Not Matched and Matched ERAs

Date Range Selection:

- ALL
- RANGE

Payer Range Selection:

- ALL
- RANGE

The initial list of the ERAs selected will then be presented:

```
ERA List - Worklist           Jul 22, 2010@17:37:06          Page:    1 of    3
SELECTED:  MATCH STATUS: BOTH           POST STATUS: UNPOSTED
           DATE RANGE  : NONE SELECTED
           ALL PAYERS
#   ERA #         TRACE#
            PAYER NAME/MATCH STATUS         ERA PAID DT  TOT AMT PAID   DT REC'D
1    1           12345
                                         10/29/02            20.00       10/29/02
            IBinsurance Company One         APPROX # EEOBs: 1
            MATCHED TO PAPER CHECK          EFT RECEIPT STATUS: NOT ENTERED

2    1234567891  TEST123
                                           6/8/10          3456.78       6/8/10
            IBinsurance Company Two         APPROX # EEOBs: 1
            MATCHED TO PAPER CHECK          (CHECK PAYMENT CHOSEN)

3    9876543210  01234567890123456789012345678901234567890123456789
                                          7/21/10           123.45       7/21/10
            IBinsurance Company Three       APPROX # EEOBs: 1
            MATCHED TO PAPER CHECK          (CHECK PAYMENT CHOSEN)
+         '-' Before the ERA # indicates no scratchpad entry
    Select ERA                View/Print ERA            Exit
    Sort List                 Hide/Display Batch
Select Action: Next Screen//
```

Figure 4 – Sample ERA List – Worklist (list manager worklist)

Field	Description
ERA #:	The number that the VistA system has assigned to designate an ERA. It is shown on the ERA List – Worklist), after accessing the WL Worklist menu option. Each ERA is in numerical order as it is accepted into Vista.
Trace #:	A number that the insurance company assigns in order to identify which EFT payment is associated with what ERA; it is used to re-associate an electronic remittance payment with the data. The trace # is equivalent to the paper check number.
Payer Name:	The name of the Third Party payer that is submitting the ERA or EFT, which is the Insurance company that is responsible for payment of bills on behalf of their subscriber.
Match Status:	Three status choices are available: Unmatched, Matched and Matched to paper check.
ERA Paid Date:	The date that the ERA was paid.
Total Amount Paid:	The total amount that was paid.
Approx # of EEOBs:	The approximate number of EEOBs within the ERA that will assist in batching the ERA based on the number of EEOBs required in a batch.
Payment Type/Electronic Status:	Five labels will be noted in this area: Check payment expected and EFT Receipt Status N/A, Transmitted, and Accepted by FMS. If 'check payment chosen' is the payment type for the ERA, the ERA has erroneously been matched to a paper check and not the corresponding EFT. The ERA must be unmatched and manually

Field	Description
	matched to the EFT before processing. N/A is always used to indicate the EFT has not been accepted by FMS. The process could take up to 3 days to show as accepted except when end of the month overlap occurs which can add up to 3 days to the process. The ERA should not be worked until it has been accepted in FMS.

3.3.1. ERA List - Worklist Actions

There are a number of list manager options available on the ERA Worklist screen that provide greater capability to manage records at the ERA level.

Select ERA	Used to select a specific ERA.
Sort List	Allows the user to sort the ERA worklist by multiple criteria; amount paid, payer name, ERA paid date, or date ERA received. Sorting the worklist by these criteria does not change the list of the individual EEOB's within each ERA.
View/Print ERA	Used to display/print the summary ERA information.
Hide/Display Batch	Used to turn on or off the ability to display batch information.

3.3.1.1. Hide/Display Batch

This ERA List – Worklist action provides the capability to display or hide from view the individual information pertaining to the batches that make up an ERA. By displaying more detailed information, the user will be able to more easily identify and prioritize those EEOBs that are not ready to post, and require additional work.

Example with the display batch ON:

```
ERA List - Worklist           Jul 22, 2010@17:37:06          Page:    1 of    3
SELECTED:  MATCH STATUS: BOTH           POST STATUS: UNPOSTED
           DATE RANGE  : NONE SELECTED
           ALL PAYERS
#   ERA #         TRACE#
            PAYER NAME/MATCH STATUS         ERA PAID DT  TOT AMT PAID   DT REC'D
1    1           12345
                                         10/29/02            20.00       10/29/02
            IBinsurance Company One         APPROX # EEOBs: 1
            MATCHED TO PAPER CHECK          EFT RECEIPT STATUS: NOT ENTERED
            - BATCH #1     FULL PAYMENT                    NOT READY TO POST
            - BATCH #2     PARTIAL PAYMENT                 NOT READY TO POST
            - BATCH #3     NO PAYMENT                      NOT READY TO POST

2    1234567891  TEST123
                                           6/8/10          3456.78       6/8/10
            IBinsurance Company Two         APPROX # EEOBs: 1
            MATCHED TO PAPER CHECK          (CHECK PAYMENT CHOSEN)
            - BATCH #1     LAST NAME FROM A - DZZZ         NOT READY TO POST
            - BATCH #2     LAST NAME FROM E - GZZZ         NOT READY TO POST
            - BATCH #3     LAST NAME FROM H - MZZZ         NOT READY TO POST

+         '-' Before the ERA # indicates no scratchpad entry
    Select ERA                View/Print ERA            Exit
    Sort List                 Hide/Display Batch
Select Action: Next Screen//
```

Example with the display batch OFF:

```
ERA List - Worklist           Jul 22, 2010@17:37:06          Page:    1 of    3
SELECTED:  MATCH STATUS: BOTH           POST STATUS: UNPOSTED
           DATE RANGE  : NONE SELECTED
           ALL PAYERS
#   ERA #         TRACE#
            PAYER NAME/MATCH STATUS         ERA PAID DT  TOT AMT PAID   DT REC'D
1    1           12345
                                         10/29/02            20.00       10/29/02
            IBinsurance Company One         APPROX # EEOBs: 1
            MATCHED TO PAPER CHECK          EFT RECEIPT STATUS: NOT ENTERED

2    1234567891  TEST123
                                           6/8/10          3456.78       6/8/10
            IBinsurance Company Two         APPROX # EEOBs: 1
            MATCHED TO PAPER CHECK          (CHECK PAYMENT CHOSEN)

3    9876543210  0123456789012345678901234567890123456789012345678 9
                                          7/21/10           123.45       7/21/10
            IBinsurance Company Three       APPROX # EEOBs: 1
            MATCHED TO PAPER CHECK          (CHECK PAYMENT CHOSEN)
+         '-' Before the ERA # indicates no scratchpad entry
    Select ERA                View/Print ERA            Exit
    Sort List                 Hide/Display Batch
Select Action: Next Screen//
```

3.3.1.2.Sort List

In order to work more efficiently with ERAs, the user can choose selections from two different sort levels in order to identify the ERAs to be worked on first:

- First Level Sort: Amount Paid, Payer Name, ERA Paid Date, Date ERA Received
- Second Level Sort: None, or any of the data elements listed in the First Level Sort (cannot use the same sort twice)

3.3.1.3. Select ERA

Allows the user to select a specific ERA by number

3.3.1.3.1 Batched ERA

If the ERA has been previously split into batches, the user will be prompted to choose between the entire ERA and the individual batches. If the user has chosen to work with an individual batch, the user will be prompted to choose a specific batch.

```
Select Action: Next Screen// SE   Select ERA
Select #:  (8-11): 8

DO YOU WANT THE (E)NTIRE ERA OR JUST A (B)ATCH?: b  (B)ATCH
Select BATCH: ?
    Answer with BATCH BATCH #, or NAME
   Choose from:
   1        BATCH #: 1    READY TO POST
   2        BATCH #: 2    READY TO POST
   3        BATCH #: 3    READY TO POST

Select BATCH: 1       BATCH #: 1    READY TO POST
```

Then, one is prompted to select the display order for the payment information:

- NO ORDER – same order as sent by the Payer
- ZERO-PAYMENTS FIRST
- ZERO PAYMENTS LAST

NOTE: While within a batch, the user is presented with 10 actions (not including Exit); however, the following three actions will be disabled at this time: Refresh Scratch Pad, Distribute Adjustments, and Preview Receipt. If chosen, the system will generate the following message:

THIS ACTION IS NOT VALID WHEN IN A BATCH WITHIN THE ERA.

NOTE: If any negative amounts on an ERA have not been distributed to other lines within the ERA before one attempts to access an individual batch, the system will generate the following message:

THIS ERA HAS NEGATIVE ADJUSTMENTS THAT NEED TO BE DISTRIBUTED TO OTHER PAYMENTS ON THE ERA. YOU CANNOT SELECT ANY INDIVIDUAL BATCHES UNTIL THE DISTRIBUTIONS ARE COMPLETE.
PRESS RETURN TO CONTINUE:

Note: The Batch Maintenance function is locked with the security key, PRCA ERA BATCH MAINT.

3.3.1.3.2 Non batched ERA

If the ERA has not been split, the user will be automatically prompted to select the display order for payment information.

Once the ERA is selected, if the payer has indicated a PAYMENT METHOD CODE on the ERA, it will be displayed here. This can be used as a guide as to how the payer has decided to send the payment for this ERA to the site. Some examples are: CHK indicates a paper check should be expected; NON- indicates an Ø-payment; ACH indicates an EFT should be expected; FWT indicates a federal wire transfer.

If the PAYMENT METHOD CODE indicates NON or CHK and is a zero-payment ERA, respond YES to the next prompt to mark the ERA as MATCH-Ø-PAYMENT.

If matching a paper check with an ERA, enter the check # and date of the check.

```
EEOB Worklist/Scratch Pad     Jul 21, 2010@12:17:58          Page:    1 of    1
ERA Entry #: 9876543210        Total Amt Pd: 123.45
Payer Name/ID: IBinsurance Company One/55555555
PAPER CHECK #: 1003

1       EEOB Seq # On ERA: 1   Net Payment Amt: 123.45
       1.001 Claim #: KXXXXXX Patient/Last 4: IBpatient,One A/5555
         Claim Bal: 0.00   Billed Amt: 0.00   Amt To Post: 123.45
         Svc Dt: 6/1/00  COB: NO   Rx Copay: UNKNOWN  Means Tst: ??
         Payment Amt: 123.45   Total Adjustments: 0.00  Net: 123.45
.........................................................................




          Enter ?? for more action
    Split/Edit A Line         Look At Receipt       EOB View/Print EEOB
    Distribute Adj Amts       Review Line           ERA View/Print ERA
    Refresh Scratch Pad       Batch Maintenance         Exit
    Research Menu             Verify
Select Action: Next Screen//
```

Figure 5 – Sample EEOB Worklist/Scratch Pad

The header of the EEOB Worklist/Scratch Pad screen contains the ERA Entry #; the Name and ID number of the Payer; the Total Amount being Paid on the ERA (this will equal the dollar amount of the Electronic Funds Transfer or Paper Check received from the Payer; and the EFT Trace # or the number from the Paper.

Each EEOB line item equates to a line item on a paper EOB form. The advantage is that the information on the EEOB Worklist/Scratch Pad will always be in the same location, regardless of Payer. HIPAA mandates standardization of the electronic transmissions.

Field	Description

Field	Description
EEOB Seq # on ERA:	This shows the line item order as the payer sent it. Remember, the Worklist can be sorted with Zero Payments First or Zero Payments Last, so the sequence number may not match the line item list on the far left of the screen.
Net Payment Amt:	The payment amount plus or minus the adjustment amount will equal the net payment amount for this claim number.
Claim #:	The claims number associated with this payment. This may or may not be the correct claim number. Research each claim carefully to see the amount being paid is appropriate for the claim in AR. Test sites have identified Payer errors (typos) that could result in a payment being applied to the wrong claim if not corrected by using the Split/Edit A Line action. If the line item is marked (V), the system has already done a verification match between bill number and the patient name, last four of the social, date of service and original billed amount.
Patient/Last 4:	The patient's name and last four digits from their SSN. Used to help identify this payment is for the correct Claim.
Claim Balance:	Current balance from AR.
Billed Amt:	Original billed amount from AR.
Amount to Post:	The payment amount plus or minus the adjustment amount will equal the amount to post for this claim number.
Service Date:	Beginning Service Date for this Claim
COB:	Coordination of Benefits information that indicates whether a secondary payer has been identified for this claim.
Rx Copay:	Current Rx Copay status of the patient
Means Test:	Indicates if this patient may be responsible for Means Test co-payments
Payment Amt:	Amount of money paid for this claim on this ERA.
Total Adjustments:	Net total of all adjustments for this line item.
Net:	The payment amount plus or minus the adjustment amount.

3.3.2. Worklist Actions

There are a number of actions available on the EEOB Worklist/Scratchpad that can assist a user to ensure that the correct payment is being applied to the correct claim.

Action	Description
Split/Edit a Line	Used to split a payment or adjustment between two or more bills (if the payer has combined payments) or to correct the claim # associated with a payment (if the payer has reported the payment for the wrong bill).
Distribute Adj Amt	Used to balance the receipt total to be posted with the total amount deposited if the payer sends a takeback within the ERA.

Refresh Scratch Pad	Restores the scratch pad record to the original lines extracted from the ERA. All previous actions (splits/ edits/ comments) that were performed will be deleted and must be re-entered.
Research Menu	Link to all the necessary AR functions/ processes such as TPJI, needed to process ERAs. These can each still be accessed through regular AR menu options.
Look at Receipt	Compiles the payments in the ERA Worklist/Scratch Pad and displays the lines that will be entered on a receipt.
Review Line	Allows addition of comments or used as a bookmark on a specific line within an ERA in case processing was interrupted, thereby allowing the user to more easily resume where he/she left off. This option must be turned 'on' each time the user enters the ERA to enter or view comments.
Batch Maintenance	A newly designed function that allows a user to break an ERA into batches (pieces), thereby allowing multiple clerks to work on an ERA simultaneously. The functions within this area are extremely advantageous- especially on large ERAs.
Verify	Provides the functionality to identify and manually mark EEOBs as verified.
View/Print EEOB	Used to display/print the detail received on the ERA for a selected line (EEOB).
View/Print ERA	Used to view/print the entire formatted ERA, with or without the EEOB detail.

3.3.2.1.Split/Edit a Line

Sometimes Payers combine payments for two or more claims onto one claim. This action is used to split the payment to the appropriate claim. It can also be used to correct an incorrect claim number.

```
EEOB Worklist/Scratch Pad     Oct 07, 2010@16:55:39        Page:    2 of    3
ERA Entry #: 21                Total Amt Pd: 1165.99
Payer Name/ID: Aetna/US Healthcare/1953402799
PAPER CHECK #: 05507-93746289
+
3    EEOB Seq # On ERA: 3   Net Payment Amt: 812.00
    3.001  Claim #: KXXXXXX   Patient/Last 4: IBpatient,One/1234
         Claim Bal: 14850.54   Billed Amt: 14850.54   Amt To Post: 812.00
         Svc Dt: 12/12/02  COB: NO   Rx Copay: NON-EXEMPT  Means Tst: YES
         Payment Amt: 812.00   Total Adjustments: 0.00  Net: 812.00
.......................................................................
4    EEOB Seq # On ERA: 4   Net Payment Amt: 343.99
    4.001  Claim #: KXXXXXX   Patient/Last 4: IBpatient,One/1234
         Claim Bal: 100.00   Billed Amt: 100.00   Amt To Post: 343.99
         Svc Dt: 1/22/03  COB: NO   Rx Copay: NON-EXEMPT  Means Tst: YES
         Payment Amt: 343.99   Total Adjustments: 0.00  Net: 343.99
......................................................................
          Enter ?? for more actions
    Split/Edit A Line         Look At Receipt       EOB View/Print EEOB
    Distribute Adj Amts       Review Line           ERA View/Print ERA
    Refresh Scratch Pad       Batch Maintenance         Exit
    Research Menu             Verify
Select Action: Next Screen//
```

This example shows how to Split/Edit Line item #4 to post the payment correctly. This action takes place after reviewing the EEOB detailed data to confirm how the payment should be applied.

```
Select Action: Next Screen// Split/Edit A Line

SELECT THE ENTRY THAT HAS A LINE YOU NEED TO SPLIT/EDIT
Select EEOB Line:  (3-4): 4

    4.001  Claim #: KXXXXXX   Patient/Last 4: IBpatient,One/1234
         Claim Bal: 100.00   Billed Amt: 1719.92   Amt To Post: 343.99
         Svc Dt: 1/22/03  COB: NO   Rx Copay: NON-EXEMPT  Means Tst: YES
         Payment Amt: 343.99   Total Adjustments: 0.00  Net: 343.99
.......................................................................

CLAIM #: KXXXXXX//   >>Current claim balance is: 100.00
PAYMENT AMOUNT TO APPLY TO THIS CLAIM: 343.99// 100.00
RECEIPT LINE COMMENT: SPLIT PAYMENT REMAINDER APPLIED TO KXXXXXX

CLAIM #: KXXXXXX  >>Current claim balance is: 2341.39
PAYMENT AMOUNT TO APPLY TO THIS CLAIM: 243.99// <RET>
RECEIPT LINE COMMENT: SPLIT PAYMENT - ORIG APPLIED TO KXXXXXX
```

Apply the correct payment amount to the correct claim number(s) until all the funds are applied.

```
    Claim #                      Payment Amount   Adjustment Amt    Net Amount
1   KXXXXXX                              100.00             0.00        100.00
          SPLIT PAYMENT REMAINDER APPLIED TO KXXXXXX
2   KXXXXXX                              243.99             0.00        243.99
          SPLIT PAYMENT - ORIG APPLIED TO KXXXXXX
                                 ==============   ==============   ===========
    TOTALS:                              343.99             0.00        343.99



  File New Lines            Edit Lines Split          Exit
Select Action:Quit//  File New Lines
```

Edit Line Split if the information is not correct. File the new lines to save this information. **Exiting without filing will mean all changes are discarded.**

```
4    EEOB Seq # On ERA: 4   Net Payment Amt: 343.99
    4.001  Claim #: KXXXXXX   Patient/Last 4: IBpatient,One/1234
         Claim Bal: 100.00   Billed Amt: 1719.92   Amt To Post: 100.00
         Svc Dt: 1/22/03  COB: NO   Rx Copay: NON-EXEMPT  Means Tst: YES
         Payment Amt: 100.00   Total Adjustments: 0.00  Net: 100.00
         Receipt Comment: SPLIT PAYMENT REMAINDER APPLIED TO KXXXXXX
.............................................................................
    4.002  Claim #: KXXXXXX   Patient/Last 4: IBpatient,One/1234
         Claim Bal: 2341.39   Billed Amt: 2341.39   Amt To Post: 243.99
         Svc Dt: 1/22/03  COB: NO   Rx Copay: NON-EXEMPT  Means Tst: YES
         Payment Amt: 243.99   Total Adjustments: 0.00  Net: 243.99
         Receipt Comment: SPLIT PAYMENT - ORIG APPLIED TO KXXXXXX
```

Sub lines are created for each EEOB line item to allow the payment amounts to be split and distributed as necessary. The sub lines are numbered in increments of .001. In this example, the sub-lines are numbered 4.001 and 4.002.

3.3.2.2.Distribute Adj Amt

There are circumstances where payers determine they have 'overpaid' a VA facility on a claim. There are two possible ways Payers process transactions to recoup overpayments:

- Process a retraction of funds on a subsequent payment (take back)
- Issue a negative payment adjustment (clipped payment)

Here are two examples showing how a 'clipped payment' and a 'take back' will appear on an ERA.

Example One: Take back

VA billed Payer $200.00 for care. Payer issued a payment for $160.00 (80% of the billed amount). A Payer review shows policy should have paid at 60% so the actual payment should have been $120.00.

```
3    EEOB Seq # On ERA: 3   Net Payment Amt: -40.00
    3.001  Claim #: KXXXXXX   Patient/Last 4: VA Patient One/1234
         Claim Bal: 0.00   Billed Amt: 200.00   Amt To Post: -40.00
```

```
        Svc Dt: 12/12/02  COB: NO   Rx Copay: NON-EXEMPT  Means Tst: YES
        Payment Amt: 120.00   Total Adjustments: -160.00  Net: -40.00
```

In this example, the Payer sent an EEOB with both the new payment amount ($120.00) and the retraction of the incorrect payment (-$160.00). This resulted in the Net Payment amount of a negative number (-$40.00) being recorded on this EEOB. Use the action called `Distribute Adj Amts` on the EEOB Worklist to decrease the payments received on one or more of the other claims within the ERA. See the Distributed Adjustments section of this guide for instructions on how to perform this action.

Example Two: Clipped Payment

Payer determines an overpayment of $14.00 was made to VA. Rather than process a negative transaction adjustment on as specific VA claim, they process a non-specific retraction.

```
1    EEOB Seq # On ERA: ADJ1   Net Payment Amt: -14.00
    1.001***ADJUSTMENT AT ERA LEVEL
        Payment Amt: 0.00   Total Adjustments: -14.00  Net: -14.00
        ADJUSTMENTS:
         1.  Non-specific retraction (ref# S1234): -14.00
```

The EEOB line shows an adjustment at an ERA level. This is because the Payer did not provide a VA claim number. The Payment Amount will show as $0.00 and the adjustment amount -$14.00. The net payment amount is -$14.00. The Ref # is provided by the Payer as a way for both you and the payer to identify and track this transaction. The Adjustment comments show this is a non-specific retraction with no reference to a claim number. Again, use the action called **`Distribute Adj Amts`** on the EEOB Worklist to decrease the payments received on one or more of the other claims within the ERA. .

Sometimes Payers will process non-specific payments to VA.

```
2    EEOB Seq # On ERA: ADJ2   Net Payment Amt: 24.00
    2.001***ADJUSTMENT AT ERA LEVEL
         Payment Amt: 0.00   Total Adjustments: 24.00  Net: 24.00
         ADJUSTMENTS:
           1.  Non-specific payment (ref# A1234): 24.00
```

ERA level adjustments do not reference individual claims. The payment amount = Ø, the total adjustments is a positive number ($24.00) and with a net payment for the amount adjusted (negative for a retraction/positive for an additional payment). The Ref # is provided by the Payer as a way for both you and the payer to identify and track this transaction. This non-specific payment will be placed in your facility's suspense account when the receipt is processed for this ERA.

Use the **Distribute Adj Amt** action to resolve take-backs and clipped payments.

```
Select Action: Next Screen// Distribute Adj Amts

SELECT A LINE THAT NEEDS AN ADJUSTMENT AMOUNT DISTRIBUTED: 1.001// <RET>
  LINE #: 1.001 AMOUNTS NEEDED TO DISTRIBUTE: -14.00
```

```
SELECT A LINE TO DISTRIBUTE THE ADJUSTMENT AMOUNT TO: ?

THE FOLLOWING LINE(S) HAVE A NET PAYMENT THAT CAN BE USED TO OFFSET THE
  NEGATIVE NET PAYMENT FOR LINE 1.001 (-14.00):
     3.001           812.00 On hold exists
     4.001           243.99
     2.001            24.00

SELECT A LINE TO DISTRIBUTE THE ADJUSTMENT AMOUNT TO:
```

In this example, line item 1.001 has a negative amount that needs to be distributed to a payment. Entering a question mark displays the lines on the ERA that have a positive payment that can be used to offset the negative net payment.

```
SELECT A LINE TO DISTRIBUTE THE ADJUSTMENT AMOUNT TO: 4.001
  LINE #: 4.001  LINE BALANCE: 243.99

ADJUSTMENT AMOUNT TO DISTRIBUTE: 14.00// <RET>
DECREASE ADJ COMMENT (1-60 CHARACTERS):
  > RETRACTED FOR ERA ADJ #1 Ref: S1234
  Replace  <RET>
```

An adjustment amount can be distributed against several lines if necessary. The user does not have to perform an adjustment for the take back amount. A DECREASE ADJUSTMENT will be automatically performed for the decreased amount when the user processes the receipt for posting if the Worklist is used to create the receipt. A standard comment will be used will be used when the DECREASE ADJUSTMENT is sent unless a new comment is entered. (It is up to each station to determine if the default comment is used or a more detailed comment needs to be entered by the user.)

```
1    EEOB Seq # On ERA: ADJ1   Net Payment Amt: 0.00
  1.001***ADJUSTMENT AT ERA LEVEL
       Payment Amt: 0.00   Total Adjustments: 0.00  Net: 0.00
       ADJUSTMENTS:
        1.  Non-specific retraction (ref# S1234): -14.00
        2.  Adjustment distribution to balance receipt: 14.00
            RETRACTED FUNDS DEDUCTED FROM OTHER PAYMENT ON THIS ERA
.......................................................................
  4.001  Claim #: KXXXXXX   Patient/Last 4: VA Patient One/1234
       Claim Bal: 2341.39   Billed Amt: 2341.39   Amt To Post: 229.99
       Svc Dt: 1/22/03  COB: NO   Rx Copay: NON-EXEMPT  Means Tst: YES
       Payment Amt: 243.99   Total Adjustments: -14.00  Net: 229.99
       ADJUSTMENTS:
        1.  Distributed adj dec for retraction S1234: -14
            RETRACTED FOR ERA ADJ #1 Ref: S1234
```

An adjustment record is then displayed attached to BOTH lines selected, indicating the action that was taken. The negative net payment line will have its net amount automatically increased by the amount selected and show a Net Payment Amount of zero. The line with the positive net payment data will be automatically decreased by this same amount to balance the amount of the deposit/check with the amount being posted. The Total Adjustments field shows the amount adjusted, while the Amount to Post and Net show the new payment amount.

3.3.2.3.View/Print EEOB and View/Print ERA

These Worklist actions are used to display/print the detail received from a Payer. Where the View/Print EEOB will only show the information for one line on the ERA, the View/Print ERA will show detailed information on each and every EEOB line for the entire ERA. Here is a sample of the EEOB information sent by Payers.

```
                EDI LOCKBOX EEOB DETAIL FROM WORLIST   10/13/10       Page: 1

 ERA NUMBER: XXXXXXXXXX  ERA DATE: Feb 07, 2010
INS COMPANY: IBinsurance Company One/555555555
ERA TRACE #: XXXXXXXXXXX
==============================================================================

CLAIM #: XXX-KXXXXXX
EOB GENERAL INFORMATION:
 Type        : NORMAL EOB              EOB Paid DT  : 02/07/07
 Entry Dt/Tm :02/09/07 4:32 pm         Claim Status : PROCESSED
 Entry Dt/Tm :02/09/07 4:32 pm         Review Status: ACCEPTED-COMPLETE EOB
 Entered By  :                         Insurance Seq: PRIMARY
 Last Edited : 02/09/07 6:50 pm        Last Edit By : POSTMASTER
 Patient Name: IBpatient,One A         Pt. Relation : PATIENT
 Insured Name: IBpatient,One A         Insured ID   : XXXXXXXXX
 Claim Rec'd Date     :
 Other Subscriber Name:


Enter RETURN to continue or '^' to exit:
```

```
                EDI LOCKBOX EEOB DETAIL FROM WORLIST   10/13/10       Page: 2
```

```
 ERA NUMBER: XXXXXXXXXX  ERA DATE: Feb 07, 2010
INS COMPANY: IBinsurance Company One/555555555
ERA TRACE #: XXXXXXXXXXX
==============================================================================
PAYER INFORMATION:
 Payer Name   : IBinsurance Company One
 Payer Id     : 555555555
 ICN          : XXXXXXXXX

 Contact Phone  : 555-555-5555
 Contact e-Mail : XXXXXX@XXXX.COM
 Payer Web Site : http://www.WebSite.com
 Policy Reference: XXXXXXXXXXXXXXXXXXXXXXXXXXXXXXXXXXXXXXXXXXXX
 XXXXXXXXXXXXXXXXXXXXXXXXXXXXXXXXXXXXXXXXXXXXXXXXXXXXXXXXXXXX
 Cross Ovr ID : XXXXXXXXXX
 Cross Ovr Nm: XXXXXXXXXX XXXXXX


Enter RETURN to continue or '^' to exit:
```

```
               EDI LOCKBOX EEOB DETAIL FROM WORKLIST    7/22/10       Page: 3

 ERA NUMBER: XXXXXXXXXX  ERA DATE: Feb 07, 2010
INS COMPANY: IBinsurance Company One/555555555
ERA TRACE #: 1234567890123456789012345678901234567890123456789
==============================================================================
CLAIM LEVEL PAY STATUS:
 Tot Submitted Chrg:     102.95         Covered Amt       :       0.00
 Payer Paid Amt    :      20.59         Patient Resp. Amt :       0.00

CLAIM LEVEL ADJUSTMENTS:
 NONE

MEDICARE INFORMATION:
  NONE
LINE LEVEL ADJUSTMENTS:
  #   SV DT   REVCD  PROC  MOD  UNITS  BILLED  DEDUCT  COINS    ALLOW     PYMT
  1 06/01/10    510 99213          1   102.95    0.00   0.00   102.95    20.59
ADJ: CO  23  Payment adjusted because charges have been paid by another payer.
ADJ AMT: 82.36

Enter RETURN to continue or '^' to exit:
```

3.3.2.4.Review Line

This worklist action is used to enter comments for an EEOB or as a bookmark when an EEOB was last worked on, so that the process be more easily resumed after an interruption. This option now remains active for the user, even if he/she leaves the worklist. Additionally, each user comment that has been entered is identified by the user and the date/time that it was entered or edited. This will allow the user to edit his/her own comments. Individual user preference determines whether this option is consistently on or off.

```
Select Action: Next Screen// re
     1   Refresh Scratch Pad
     2   Research Menu
```

```
     3   Review Line
CHOOSE 1-3: 3   Review Line

REVIEW DATA DISPLAY IS CURRENTLY TURNED ON
DO YOU WANT TO TURN IT OFF?: NO//

Select EEOB Line:  (1-2): 1

REVIEW DATE/TIME: 8/12/04@13:13:18
COMMENT:
  1>this is a test
  2>
EDIT Option:
REVIEWED?: y  YES
```

3.3.2.5.Batch Maintenance

Before proceeding to work with the EEOBs, the user has the option to further define how the ERAs will be worked. The Batch Maintenance function within the worksheet is locked with key 'PRCA ERA BATCH MAINTENANCE' in order to prevent the composition of a batch from being changed without authorization. Consider the importance of this key when giving it out (to say, AR Leads/Supervisors). Users can determine based on the volume of EEOBs in an ERA and the number of users available to process the ERA if the Batch Maintenance function should be used or not. Smaller sites with only one or two AR techs working with ePayments may not find this enhancement to be useful. On the other hand, larger sites working with large ERA's and multiple users, may find this option very useful and a more efficient way for processing the worklist.

The capability in this area includes the ability to edit a batch, create new batch assignments, mark all batches as ready to post, and gather summary batch reports:

New Batch Assignment

When initially creating a batch (es), the user will be presented with four (4) choices that he/she can use to define the content of the batch(as):

```
 ***** THIS ERA CURRENTLY HAS NO BATCHES DEFINED *****

THERE ARE APPROXIMATELY 5 EEOBS IN THIS ERA
DO YOU WANT TO SPLIT THIS ERA INTO BATCHES?: NO// YES


YOU MAY USE ANY ONE OF THE FOLLOWING CRITERIA TO SPLIT THE ERA INTO BATCHES:

          1 - BY MAX # OF EEOBs TO INCLUDE IN A BATCH
          2 - BY RANGES OF PATIENT LAST NAME
          3 - BY EEOB PAYMENT STATUS (FULL/PARTIAL/NO PAY)
          4 - BY CO-PAY AND NON-COPAY FOR THE DATE OF SERVICE

CRITERIA SELECTION: 1  MAX #

DO YOU WANT TO NAME YOUR OWN BATCHES?: NO//

MAX # OF EEOBS TO INCLUDE IN A BATCH: 2



3 BATCHES CREATED.  PRESS RETURN TO CONTINUE
```

Note: In the above example, you will notice that the user is prompted if he/she wants to name the batch(es) or accept names that the system generates. Batches can be specifically named by the user if this will make it easier for the users to recognize the batches assigned to them. If the user is unsure of a batch name at a later time, recall that they can ?? to display a list of all existing batch names, then select the appropriate batch, and continue processing.

When working with an ERA that already has batches, this action will allow the user to remove batch assignments so that he/she can distribute the EEOBs within the batch in a different manner. Note that the action does not remove any review comments or verification indicators already existing within the ERA.

```
BATCH MAINTENANCE:
          1     EDIT BATCH
          2     NEW BATCH ASSIGNMENT
          3     MARK ALL READY TO POST
          4     BATCH SUMMARY REPORT
          5     QUIT AND RETURN TO WORKLIST

Select Action: Quit// 2  NEW BATCHES

THIS ACTION REMOVES ALL BATCH REFERENCES.  THE BATCHES CAN THEN BE REBUILT.
ARE YOU SURE YOU WANT TO CONTINUE?: NO//
```

```
elect Action: Quit// 1  EDIT BATCH

DIT(A)LL or (O)NE BATCH?: ONE//
elect BATCH: 1       FULL PAYMENT    NOT READY TO POST
AME: FULL PAYMENT//
EADY FOR POSTING: NOT READY TO POST// ?
     Enter 1 (YES) if all the batch's records are ready to be posted.
     Choose from:
       0        NO
       1        YES
EADY FOR POSTING: NOT READY TO POST// 1  YES


ATCH MAINTENANCE:
          1     EDIT BATCH
          2     NEW BATCH ASSIGNMENT
          3     MARK ALL READY TO POST
          4     BATCH SUMMARY REPORT
          5     QUIT AND RETURN TO WORKLIST

elect Action: Quit//
```

Mark all Ready to Post

A receipt CANNOT be created until all batches are marked 'READY TO POST'. Therefore, before creating a receipt from within the Worklist, the user will need to mark all batches as ready to post using this option if the users working the individual batches did not already do so when they completed their work while in the batch.

```
Select Action: Quit// 3  MARK ALL

THIS ACTION WILL MARK ALL BATCHES FOR THIS ERA AS READY TO POST
ARE YOU SURE YOU WANT TO DO THIS?: NO// y  YES

3 BATCHES CHANGED TO READY TO POST
ALL BATCHES ARE NOW READY TO POST

PRESS RETURN TO CONTINUE
```

Batch Summary Report

The Batch Summary report can be used in order to identify the status of individual batches belonging to an ERA. Depending on the condition of the batches, the user will continue working with the functions available in Batch Maintenance.

When used well, the report can help the user to easily/quickly identity the batches that are NOT READY TO POST. Until the batches are READY TO POST, the user cannot create/process the receipt. Contact the clerk (s) responsible for these batches to find out when they will be ready, or if they are ready but the user forgot to mark them READY TO POST.

Some of the information displayed on this report is the following: the number of batches, number of EEOBs per batch, the criteria that was selected when the batch assignment(s) was done, and the posting status.

```
BATCH MAINTENANCE:
          1     EDIT BATCH
          2     NEW BATCH ASSIGNMENT
          3     MARK ALL READY TO POST
          4     BATCH SUMMARY REPORT
          5     QUIT AND RETURN TO WORKLIST

Select Action: Quit// 4  BATCH SUMMARY
DEVICE: HOME// _
```

```
EDI LBOX WORKLIST - BATCH SUMMARY REPORT                    8/6/04     Page: 1

ERA #: 7                              TRACE #: 08202-70856697
PAYER: Aetna/US Healthcare             ERA DT: 3/13/03

BATCH #  NAME                            READY TO POST?  STATUS SET BY
================================================================================
      1  FULL PAYMENT                    NO              KOPP,TERRY
         # RECORDS: 4  CRITERIA: PAYMENT PART/FULL/NONE  PARTIAL PAYMENT
      2  PARTIAL PAYMENT                 YES             KOPP,TERRY
         # RECORDS: 0  CRITERIA: PAYMENT PART/FULL/NONE  FULL PAYMENT
      3  NO PAYMENT                      YES             KOPP,TERRY
         # RECORDS: 1  CRITERIA: PAYMENT PART/FULL/NONE  NO PAYMENT

Enter RETURN to continue or '^' to exit:
```

Figure 6- Sample of Batch Summary Report output

3.3.2.6.Verify

The system has been enhanced to automatically mark EEOBs as verified based on the first five digits of the patient's last name, the patient's last four of their social security number, the claim number, the original bill amount, and the date of service. If all the criteria matches in the EEOB and in the AR package, the system will place a (V) next to the EEOB to indicate that all the criteria was automatically verified. Where the system indicator has not been automatically updated, this worklist action is manually used to mark EEOBs as verified. In addition, the user can display/print the list of bills that were not automatically verified or contain discrepancies between the EEOB and the bill record in VistA. The report will include data from the original bill (i.e. patient full name, date of service, last 4 digits of patient's SSN, billed amount, and bill number) as well as data from the EEOB (i.e. patient full name, date of service, billed amount and bill number). Note that all the data shown on the worklist for the EEOB is taken from the claim in VistA. You must use the report below to identify the discrepancies for unverified EEOBs.

Verify EEOB Manually

```
VERIFY EEOBs:
          1     MANUAL MARK AS VERIFIED
          2     REPORT OF UNVERIFIED WITH DISCREPANCIES
          3     QUIT AND RETURN TO WORKLIST

Select Action: QUIT// 1  MANUAL VERIFICATION

SELECT AN EEOB LINE TO MARK AS VERIFIED: 2

THIS LINE DOES NOT REFERENCE A VALID BILL

DO YOU WANT TO MARK THIS LINE VERIFIED?: NO// YES


VERIFY EEOBs:
          1     MANUAL MARK AS VERIFIED
          2     REPORT OF UNVERIFIED WITH DISCREPANCIES
          3     QUIT AND RETURN TO WORKLIST

Select Action: QUIT// _
```

7 – Sample of EEOB with verification notification

Unverified Lines with Discrepancy Report

```
VERIFY EEOBs:
          1     MANUAL MARK AS VERIFIED
          2     REPORT OF UNVERIFIED WITH DISCREPANCIES
          3     QUIT AND RETURN TO WORKLIST

Select Action: QUIT// 2  REPORT UNVERIFIED DISCREPANCIES
DEVICE: HOME// _
```

```
EDI LBOX WORKLIST - UNVERIFIED LINES DISCREPANCIES REPORT  8/16/04    Page: 1

ERA #: 40           BATCH: ALL        TRACE #: 008578663
PAYER: Aetna/US Healthcare             ERA DT: 4/30/03

       PATIENT NAME                          SUBMITTED AMT    SVC DATE(S)
* preceding data = data has discrepancy
================================================================================

EEOB Sequence #(s) on the ERA: 3  418678
VistA: DEMO-PTBAH,JOHN                0259  *178.00          *8/9/94  -*8/9/94
  ERA: DEMO-PT218,JOHN,JANE                 *6034.00         *8/28/02 -*8/29/02

EEOB Sequence #(s) on the ERA: 5  603610850
VistA: NOT RELATED TO A VistA BILL
  ERA: *DEMO-PT220,JOHN,JOHN                NO DATA          NO DATA  -NO DATA

EEOB Sequence #(s) on the ERA: 2  603616636
VistA: NOT RELATED TO A VistA BILL
  ERA: *DEMO-PT217,JOHN,JANE                NO DATA          NO DATA  -NO DATA

Enter RETURN to continue or '^' to exit: _
```

Figure 8 – Sample of Report of Unverified with Discrepancies output

3.3.3. Research Menu Actions

The Research Menu provides access to functionality necessary to process ERAs. It can be accessed from the EEOB Worklist/Scratch Pad to facilitate business process. Links to the following existing AR functions are available.

Action	Description
Release Hold	Releases 1st party Means Test/RX charges on hold to the patient
Adjustment (Inc/Dec)	Decreases or increases 1st party or 3rd party claims, as appropriate (same guidelines as prior to EDI.). Decrease adjustment will be the default; however, the user can select increase adjustment if desired.
Full Account Profile	This option will display a full account profile of all bills for a debtor regardless of the status of the bill.
Admin Cost Adj	This option has not changed it has just been added to the research menu
TPJI	Comment History will display contact information if provided
On Hold List	This report will list all charges identified as once being ON HOLD that currently have a status of BILLED and the DATE LAST UPDATED falls within the date range you specify.
Claim Match Report	Used to research 1st party Means Test/RX bill number, associated with insurance bill number – matches the DOS.
Bill Comment Log	Allows user to document any necessary and pertinent information on a 3rd party bill.
Re establish	Provides the capability to re-establish a bill for the specific site.

Bill	
View/Print EEOB	Used to display/print the detail received on the ERA for a selected line.
Review Line	Bookmarks a specific line within an ERA in case processing was interrupted, thereby allowing the user to more easily resume where he/she left off.

3.3.3.1.Adjustment <Inc/Dec>

When using this option, the software will note for the user the expected amount to decrease if the claim is to be adjusted down to the payment amount. Also a note will now display the expected claim balance after payments have been posted within an ERA. In addition, the claim balance within the EEOB list will be updated with the new amount if an increase/decrease adjustment has been made. The figures below display the information that will be shown:

```
+      Enter ?? for more actions
   Release Hold                  TPJI                    Re establish Bill
   Adjust (Inc/Dec)              On Hold Lost            View/Print EEOB
   Full Acct Prof                Claims Match Rpt        Review Line
   Admin Cost Adj                Bill Comment Log        Scratch Pad Menu/Exit

Select Action: Next Screen//adj  Adjust (Inc/Dec)

TYPE OF ADJSUTMENT: DECREASE ADJUSTMENT//

Select Bill: KXXXXXX  603- KXXXXXX REIMBURS.HEALTH 02/26/03 IBinsurance ACTIVE
         Principal Balance:  559.61   FY: 03  Principal Balance:  559.61
          Interest Balance:    0.00
             Admin Balance:    0.00
                           -------
             TOTAL BALANCE:  559.61

Checking the bill's balance ... IN Balance!
           TOTAL PAYMENT (S) TO POST FROM THIS ERA: 509.61

Enter the DECREASE Adjustment AMOUNT, from .01 to 559.61
  DECREASE PRINCIPAL BALANCE BY: 50.00
```

Figure 9 – Sample of claim balance notation

```
EEOB Worklist Research          Aug 10, 2004@11:01:33           Page: 1 of       2
ERA Entry #: 5                   Total Amt Pd:  509.61
Payer Name/ID: IBnsurance Company One/555555555
PAPER CHECK #: 55555-55555555
_____________________________________________________________________________
1      (V) EEOB Seq # On ERA:  1  Net Payment Amt:  0.00
         1.001 Claim #: KXXXXXX Patient/Last 4: IBpatient,One/1234
           Claim Bal: 0.00  Billed Amt: 19.47  Amt to Post: 0.00
            Svc Dt: 1/27/03 COB: NO    Rx Copay: NON-EXEMPT   Means Tst: ??
           Payment Amt: 0.00  Total Adjustments: 0.00  Net: 0.00
.............................................................................
2      (V) EEOB Seq # On ERA:  3  Net Payment Amt: 509.61
         2.001 Claim #: KXXXXXX  Patient/Last 4: IBpatient,One/1234
           Claim Bal: 509.61 Billed Amt: 559.61 Amt To Post: 509.61
```

```
          Svc Dt: 2/4/03  COB: NO    Rx Copay: NON-EXEMPT  Means Tst: NO
          Payment Amt: 590.61 Total Adjustments: 0.00  Net: 509.61
.............................................................................
+      Enter ?? for more actions
   Release Hold                  TPJI                    Re establish Bill
   Adjust (Inc/Dec)              On Hold Lost            View/Print EEOB
   Full Acct Prof                Claims Match Rpt        Review Line
   Admin Cost Adj                Bill Comment Log        Scratch Pad Menu/Exit
Select Action: Next Screen//
```

Figure 10 – Sample of corresponding claim balance update

3.3.3.2.Comment History Screen of TPJI

Patches IB*2.0*431 and PRCA*4.5*269 was enhanced to display the Payer Contact data that is imported with the 835 ERA or MRA. The Comments History screen of the Third Party Joint Inquiry option will display this contact data which will include payer name and can include phone number, fax number, email address, and website address. Contact data that comes in from an ERA or MRA transaction will be distinguishable from manually entered comments by use of the program generated text, "ERA Payer Contact Information". Refer to example below:

```
Comment History              Jul 07, 2011@18:27:38          Page:    1 of    1
K700CM9   CAGGIANO,GARTH JR  C1547       DOB: 04/29/39   Subsc ID: 520372456
AR Status: COLLECTED/CLOSED         Orig Amt: 4.49       Balance Due: 0.00


 3551940     01/17/07   2A                              FOLLOW-UP DT:

 3649412     07/07/11   ERA Payer Contact Information   FOLLOW-UP DT:
                        Payer Name: UNITEDHEALTHCARE
                        Contact Name: TEST PAYER 1
                        Phone Number: 800-909-1212

                        Payer Name: MEDICARE (WNR)
                        Contact Name: MEDICARE TEST PAYER
                        Phone Number: 888-998-1212
                        Email Address: EMAIL1@YAHOO.COM

          Enter ?? for more actions
BC  Bill Charges          AR  Account Profile       VI  Insurance Company
DX  Bill Diagnosis        AD  Add Comment           VP  Policy
PR  Bill Procedures       IR  Insurance Reviews     AB  Annual Benefits
CI  Go to Claim Screen    HS  Health Summary        EL  Patient Eligibility
                          AL  Go to Active List     EX  Exit
Select Action: Quit//
```

3.3.4. Example of processing a Paper Check and ERA

VAMC received a paper check from IBinsurance Company One, a payer who sends Electronic Remittance Advices (ERAs). Begin by selecting the EEOB Worklist option.

```
Select EDI Lockbox Option: WL  EEOB Worklist
SELECT PARAMETERS FOR SELECTING AN ERA


ERA POSTING STATUS: UNPOSTED//
```

```
ERA-EFT MATCH STATUS: BOTH// NOT MATCHED

LIMIT THE SELECTION TO A DATE RANGE WHEN THE ERA WAS RECEIVED?: NO//

Select ELECTRONIC REMITTANCE ADVICE ENTRY: 55555-55555555  6  55555-55555555  03-06-03
509.61  IBinsurance Company One  UNMATCHED
```

The paper check (55555-55555555) matches the ERA Trace # and the check amount received from the Payer.

No Worklist currently exists for this ERA. Create one now.

```
NO WORKLIST SCRATCH PAD ENTRY EXISTS FOR THIS ERA
DO YOU WANT TO CREATE ONE NOW?: NO// YES

NO PAYMENT METHOD CODE REPORTED


THIS ERA DOES NOT HAVE A MATCHING EFT
ENTER THE NUMBER OF THE PAPER CHECK YOU RECEIVED FOR THIS ERA: 55555-55555555// <RET>

DATE OF CHECK: 3/6/03// <RET>  (MAR 06, 2003)

CHECK BANK/ROUTING #: 123456 IBinsurance Company One

ERA #6 (TRACE #:55555-55555555) MATCHED TO PAPER CHECK 55555-55555555
IS THIS CORRECT?: YES// <RET>

ORDER OF PAYMENTS: NO ORDER// L  ZERO-PAYMENTS LAST
```

Verify the paper check number is correct. The date on the check should match the date listed in VistA. If it does not match, correct the VistA date to match the paper check. Enter the Check Bank/ Routing number as station policy dictates. Again, verify the information is correct. Select the order of the Payments. In this case, select L to sort the zero payment EEOBs to the bottom of the Worklist.

```
EEOB Worklist/Scratch Pad     Sep 11, 2010@13:24:20         Page:   1 of    2
ERA Entry #: 5                 Total Amt Pd: 509.61
Payer Name/ID: IBinsurance Company One/5555555555
PAPER CHECK #: 55555-55555555


1    EEOB Seq # On ERA: 3   Net Payment Amt: 509.61
    1.001  Claim #: KXXXXXX   Patient/Last 4: IBpatient,One/1234
         Claim Bal: 559.61   Billed Amt: 559.61   Amt To Post: 509.61
         Svc Dt: 2/4/03  COB: NO   Rx Copay: NON-EXEMPT  Means Tst: NO
         Payment Amt: 509.61   Total Adjustments: 0.00  Net: 509.61
.......................................................................
2    EEOB Seq # On ERA: 1   Net Payment Amt: 0.00
    2.001  Claim #: KXXXXXX   Patient/Last 4: IBpatient,One/1234
         Claim Bal: 0.00   Billed Amt: 19.47   Amt To Post: 0.00
         Svc Dt: 1/27/03  COB: NO   Rx Copay: NON-EXEMPT  Means Tst: ??
         Payment Amt: 0.00   Total Adjustments: 0.00  Net: 0.00
.......................................................................

+         Enter ?? for more actions
    Split/Edit A Line         Look At Receipt       EOB View/Print EEOB
    Distribute Adj Amts       Review Line           ERA View/Print ERA
    Refresh Scratch Pad       Batch Maintenance         Exit
    Research Menu             Verify
 Select Action: Next Screen// EOB View/Print EEOB
```

3.3.4.1.Process EEOB Line Items

In order to process line item #1, select the Research Menu action to access Third Party Joint Inquiry (TPJI) to confirm this payment is correct for this claim.

```
Select Action: Next Screen// BC   Bill Charges

DO YOU WANT ALL EEOB DETAILS?: NO// YES

>>                          EOB/MRA Information (1 OF 1)
   EOB Type: NORMAL EOB
        ICN: XXXXXXXXXXXX                  Patient Resp Amount: 50.00
 Payer Name: IBinsurance Company One      Total Allowed Amount: 0.00
   EOB Date: Mar 06, 2003              Total Submitted Charges: 559.61
                                          Reported Payment Amt: 509.61
       .
       .
       .
  Bill #: XXX-KXXXXXX
  Adjustment Group Code: PR
  Adjustment Reason Code: 3
  Adjustment Amount: 50.00
  Quantity: 0
  Reason Code Text: Co-payment Amount
```

The user can view the EEOB details without going back to the worklist by selecting Bill Charges (BC) from within TPJI to view the EEOB Details for this claim. Scrolling down to the bottom of the EEOB information shows the Payer adjusted this payment by $50.00 for the patient's insurance co-payment amount.

3.3.4.2.Create Receipt

After all of the EEOB lines have been reviewed, verified as correct and adjusted appropriately, it is time to create the receipt for these payments. Select Look at Receipt from the EEOB Worklist/Scratch Pad screen.

```
EEOB WORKLIST PREVIEW RECEIPT Oct 07, 2003@15:09:36        Page:    1 of    1
ERA Entry #: 6                 Total Amt Pd: 509.61
Payer Name/ID: IBinsurance Company One/5555555555
PAPER CHECK #: 55555-55555555
 LINE #     ACCOUNT                          AMOUNT
PAYMENTS (LINES FOR RECEIPT):
 2.001      XXX-KXXXXXX                      509.61

ZERO DOLLAR PAYMENTS:
 1.001      XXX-KXXXXXX                      0.00
 3.001      XXX-KXXXXXX                      0.00


  Print Receipt Preview     Create Receipt            Exit
Select Action: Quit//
```

The preview screen is divided into two sections. The top contains the line items and payment information. The bottom section lists all of the zero-dollar payments. Zero-dollar payments can be worked using AR options in the research menu from within the Worklist.

The Create Receipt action will create the receipt for lines on the ERA that contain payments and those lines used to offset any negative payments on this ERA. The EEOB Worklist can no longer be used to adjust any of the line items once the receipt is created.

```
THIS ACTION WILL CREATE THE RECEIPT FOR THIS ERA.  ONCE THE RECEIPT IS
 CREATED HERE, NO MORE AUTOMATIC ADJUSTMENTS MAY BE MADE FOR THIS ERA.

ARE YOU SURE YOU ARE READY TO CREATE THIS RECEIPT?: NO// YES

Select AR DEPOSIT TICKET #: 123456            03-10-03     IBpatient,One A
$0.00    OPEN

ARE YOU SURE YOU WANT TO USE THIS DEPOSIT?: NO// YES


RECEIPT EXXXXXXXX HAS BEEN CREATED FOR THIS ERA
DO YOU WANT TO GO TO RECEIPT PROCESSING NOW? YES// <RET>
```

Processing receipts for paper checks require the entry of an AR Deposit Ticket #. Contact the Agent Cashier for this number. The system will automatically generate a receipt number for this payment. All 3rd Party EDI Lockbox receipts will begin with the letter 'E'. It is important to note that every ERA is assigned its own receipt number. If four ERAs are processed on a given day, then there will be four 'E' receipts – one for each ERA. The system assigns the electronic receipt number based on the date and the

last two digits are a combination of numbers or letters. In the example below, the receipt was created on October 7, 2003 and was the first batch created for that day (00).

```
Receipt Profile               Oct 07, 2003@15:14:52         Page:   1 of    1
   Receipt #: EXXXXXXXX                Type of Payment: CHECK/MO PAYMENT
   Deposit #: XXXXXX      ERA #: 6      Receipt Status: OPEN
FMS Document: NOTSENT                   FMS Doc Status: NOT ENTERED
 #    Account                     Pay Date  By             Pay Amt  Proc Amt
1     XXX-KXXXXXX                 10/07/03  EG              509.61      0.00
                                                          --------  --------
      TOTAL DOLLARS FOR RECEIPT                             509.61      0.00

Receipt History
   Opened By: IBclerk,One                Date/Time    Opened: Oct 7, 2003
Last Edit By:                          Date/Time Last Edit:
Processed By:                          Date/Time Processed:


NP New Payment            AP Account Profile        PR Process Receipt
EP Edit Payment           RR Reprint Receipt        21 (215 Report)
CP Cancel Payment         WL Worklist (ERA)         EA Exit Action
MP Move Payment           CU Customize              CR Entered Online
                          ER Edit Receipt
Select Action: Quit//
```

The Receipt Profile screen is the same screen used when the option Receipt Processing is selected. All of the payment line items automatically transfer to this screen. No additional data entry is required to input these claim numbers and payment amounts. Process this receipt as normal to complete processing a Paper Check and ERA. The following condition must be met before the receipt can be fully processed to FMS:

The total on the receipt must be equal to the total reported on the ERA.

When the above condition is met, select the PROCESS RECEIPT action. The system will:

a) Generate the decrease adjustment for any distributed adjustments made to the payments on the Worklist AND add any related bill comments to the Bill record in AR.

b) If the receipt passes the normal edits for posting, the system will post payments to your AR and then generate and transmit the appropriate CR document to FMS for these payments.

3.3.5. Example of processing a matched ERA and EFT

VAMC received an Electronic Funds Transfer (EFT) from IBinsurance Company One, a payer who sends both EFTS and ERAs. Begin by selecting the EEOB Worklist option.

```
Select EDI Lockbox Option: WL  EEOB Worklist

DO YOU WANT A (L)IST OF ERAs OR A (S)PECIFIC ONE?: LIST//

SELECT PARAMETERS FOR DISPLAYING THE LIST OF ERAs

ERA POSTING STATUS: UNPOSTED//

ERA-EFT MATCH STATUS: BOTH// MATCHED
```

```
LIMIT THE SELECTION TO A DATE RANGE WHEN THE ERA WAS RECEIVED?: NO//

(A)LL PAYERS, (R)ANGE OF PAYER NAMES: ALL//
```

The EFT payment was automatically matched with the ERA during the AR nightly job. The user can select a specific payer by selecting Range or can view all payers by selecting All. All is the default selection.

```
Select ELECTRONIC REMITTANCE ADVICE ENTRY: 25    55555-55555555  03-10-03  79.55
IBinsurance Company One  MATCHED

NO WORKLIST SCRATCH PAD ENTRY EXISTS FOR THIS ERA
DO YOU WANT TO CREATE ONE NOW?: NO// YES

NO PAYMENT METHOD CODE REPORTED


ORDER OF PAYMENTS: NO ORDER//
```

In this example the user selected ERA #25 after viewing the worklist. The EFT Trace # 55555-55555555 was received from the Payer. Note that no check information is required. The EFT payment was already deposited into US Treasury, account MCCR RSC 5287.4/8NZZ for the VA.

If no scratchpad entry currently exists for this ERA, create one now.

```
EEOB Worklist/Scratch Pad     Oct 07, 2003@15:52:17        Page:    1 of    2
ERA Entry #: 25                Total Amt Pd: 79.55
Payer Name/ID: IBinsurance Company One/5555555555
EFT #/TRACE #: 3/55555-55555555
____________________________________________________________________________
1    EEOB Seq # On ERA: 1   Net Payment Amt: 47.26
    1.001  Claim #: KXXXXXX   Patient/Last 4:IBpatient,One/0000
         Claim Bal: 236.31   Billed Amt: 236.31   Amt To Post: 47.26
         Svc Dt: 1/15/03  COB: NO   Rx Copay: NON-EXEMPT  Means Tst: NO
         Payment Amt: 47.26   Total Adjustments: 0.00  Net: 47.26
.............................................................................
2    EEOB Seq # On ERA: 2   Net Payment Amt: 32.29
    2.001  Claim #: KXXXXXX   Patient/Last 4: IBpatient,One/0000
         Claim Bal: 161.46   Billed Amt: 161.46   Amt To Post: 32.29
         Svc Dt: 7/26/02  COB: NO   Rx Copay: NON-EXEMPT  Means Tst: NO
         Payment Amt: 32.29   Total Adjustments: 0.00  Net: 32.29
.............................................................................
          Enter ?? for more actions
    Split/Edit A Line         Look At Receipt       EOB View/Print EEOB
    Distribute Adj Amts       Review Line           ERA View/Print ERA
    Refresh Scratch Pad       Batch Maintenance         Exit
    Research Menu             Verify
Select Action: Quit//
```

The header of the EEOB Worklist/Scratch Pad screen shows the EFT #/Trace # instead of the number from the paper check.

Processing of an EFT/ERA is no different than processing an ERA and Paper Check. Perform the necessary reviews and processing for each claim.

3.3.5.1.Create Receipt

After all of the EEOB lines have been reviewed and processed, it is time to create the receipt for these payments. Select Look AT Receipt from the EEOB Worklist/Scratch Pad screen.

```
EEOB WORKLIST PREVIEW RECEIPT Oct 07, 2003@16:20:17          Page:    1 of    1
ERA Entry #: 25                Total Amt Pd: 79.55
EFT #/TRACE #: 3/55555-55555555
Payer Name/ID: IBinsurance Company One/5555555555
 LINE #     ACCOUNT                        AMOUNT
PAYMENTS (LINES FOR RECEIPT):
 1.001      XXX-KXXXXXX                    47.26
 2.001      XXX-KXXXXXX                    32.29

ZERO DOLLAR PAYMENTS:
 3.001      XXX-KXXXXXX                    0.00



          Enter ?? for more actions
  Print Receipt Preview     Create Receipt            Exit
Select Action: Quit//
```

The ‘look at’ screen is divided into two sections. The top contains the line items and payment information. The bottom section lists all of the zero-dollar payments. Zero-dollar payments can be “worked” using AR options or from within the Worklist.

The Create Receipt action will create the receipt for the lines on the ERA that contain payments and those lines used to distribute negative payments on this ERA. The EEOB Worklist can no longer be used to adjust any of the line items once the receipt is created.

```
THIS ACTION WILL CREATE THE RECEIPT FOR THIS ERA.  ONCE THE RECEIPT IS
 CREATED HERE, NO MORE AUTOMATIC ADJUSTMENTS MAY BE MADE FOR THIS ERA.

ARE YOU SURE YOU ARE READY TO CREATE THIS RECEIPT?: NO// YES



RECEIPT E03100701 HAS BEEN CREATED FOR THIS ERA
DO YOU WANT TO GO TO RECEIPT PROCESSING NOW? YES//
```

Processing receipts for EFTs does **not** require or allow the entry of an AR Deposit Ticket #. Remember, The EFT payment was already deposited into US Treasury for the VA. As with the receipt for a paper check, the system will automatically generate a receipt number for this payment. All 3rd Party EDI Lockbox receipts will begin with the letter ‘E’. It is important to note that every ERA is assigned its own receipt number. If four ERAs are processed on a given day, then there will be four ‘E’ receipts – one for each ERA.

```
                          ER Edit Receipt

Receipt Profile               Oct 07, 2003@16:24:41        Page:    1 of    1
   Receipt #: E03100701                 Type of Payment: EDI LOCKBOX
EFT Detail #: 3 VETERAN   ERA #: 25     Receipt Status: OPEN
FMS Document: NOTSENT                   FMS Doc Status: NOT ENTERED
 #    Account                     Pay Date  By              Pay Amt  Proc Amt
1     XXX-KXXXXXX                 10/07/03  EG                47.26      0.00
2     XXX-KXXXXXX                 10/07/03  EG                32.29      0.00
                                                            --------  --------
      TOTAL DOLLARS FOR RECEIPT                               79.55      0.00

Receipt History
   Opened By: IBclerk,One              Date/Time    Opened: MAR 10, 2003
Last Edit By:                          Date/Time Last Edit:
Processed By:                          Date/Time Processed:


NP New Payment            AP Account Profile        PR Process Receipt
EP Edit Payment           RR Reprint Receipt        21 (215 Report)
CP Cancel Payment         WL Worklist (ERA)         EA Exit Action
MP Move Payment           CU Customize              CR Entered Online
                          ER Edit Receipt
Select Action: Quit//    QUIT
```

The Receipt Profile screen is the same screen as you would see for Receipt Processing. Instead of a Deposit Ticket #, the EFT Detail and ERA # will display. The Type of Payment indicates EDI

LOCKBOX. All of the payment line items automatically transfer to this screen. No additional data entry is required to input these claim numbers and payment amounts. Process the receipt as normal. The following conditions must be met before the receipt can be fully processed to FMS:

a. An ERA receipt **cannot** be processed if the EFT receipt for the EFT related to this ERA has not yet been recorded in FMS and confirmed as ACCEPTED in VistA. Wait until the FMS document for the EFT deposit has reached this status in VistA before processing the ERA related to the EFT.

b. If there is an error on the EFT where the checksum was determined to be invalid, the receipt **cannot** be processed until the EDI Lockbox checksum exception is cleared on the EFT transmission

c. If the total of the receipt is not the same as the total reported on the EFT, the receipt **cannot** be processed.

d. A receipt for an ERA related to an EFT **cannot** have a deposit associated with it.

When the above conditions have been met, and you select PROCESS RECEIPT, the system will:

a. Generate the decrease adjustments for any distributed adjustments made to the payments in the Worklist and add any related bill comments to the bills.

b. If the receipt passes the normal edits for posting, it will post the payments to your A/R and will generate and transmit the appropriate TR document to FMS for EFT payments. The TR documents will transfer the payment amounts from the Fund 5287.4, Revenue Source Code 8NZZ account (where it was placed by the CR generated when the EFT was recorded) into the correct General Ledger accounts for the claims on the ERA. A CR document is created and recorded in FMS for receipts that are processed using a paper check.

3.3.5.2. How to Process an EFT using a Paper EOB (when the ERA is not received)

It is important to process an EFT even if the ERA is unavailable. By processing the EFT, the funds are appropriately transferred to the appropriate revenue source codes and the third party payments are applied to the proper outstanding accounts receivables.

Create a receipt using the receipt number of the EFT. A letter or number will need to be added to the end of the receipt. This process will create a good audit trail of the EFT. The EFT receipt number can be located by accessing the Daily Activity Report (see Reports section).

Enter EDI LOCKBOX for the receipt payment type.

Select the corresponding EFT. (To see a complete listing of EFTs, enter '??')

Do not enter a deposit ticket. The Funds have already been deposited in to the appropriate fund.

```
Select RECEIPT (or add a new one): E08080114A
  Are you adding 'E08080114A' as a new AR BATCH PAYMENT (the 16256TH)? No// Y
  (Yes)
   AR BATCH PAYMENT TYPE OF PAYMENT: EDI LOCKBOX
>>AN EFT REFERENCE IS REQUIRED
   AR BATCH PAYMENT EFT RECORD: ??
```

Manually enter each payment.

Complete the receipt processing function according to local policy.

*NOTE – The EFT will be removed from the EFT Unmatched Aging Report with this process; however, the Unapplied EFT Deposits Report will still display this EFT. (a future enhancement will correct this issue)

(This page included for two-sided copying.)

4. FMS

Financial Management System (FMS) is an interactive system to manage central payment services to federal government agencies including the VHA financial data. Deposits to FMS are transmitted during the nightly process as individual deposits and are relayed through the DMI/mailman system. The EFT information is transferred into VistA from Financial Services Center (FSC). Although paper checks are also deposited through FMS by a daily deposit ticket at each medical center, EFT's are also deposited via a deposit ticket. Deposit tickets are assigned for EFT's by PNC bank and begin with the 469 or 569 series. These 2 series of deposit tickets were reserved to be used by ePayments.

4.1. Three Day EFT Cycle

The diagram below demonstrates a high level overview of the ePay/FMS process. Upon adjudication at the payer level, the payer transmits 835 information to their respective banking partner. In turn, this banking partner transmits the information to PNC Bank, the banking partner of the VA. PNC bank sends the EFT information to US Treasury for deposit and to FSC to be translated into VistA language and for processing to the sites. In addition to sending the data to each individual VistA system, FSC also sends the information to EPHRA for storing and reference of the data as needed. Each VistA system interacts with FMS through the nightly process, notifying the financial system of funds that have been processed for each medical center. A complete cycle takes three business days to complete.

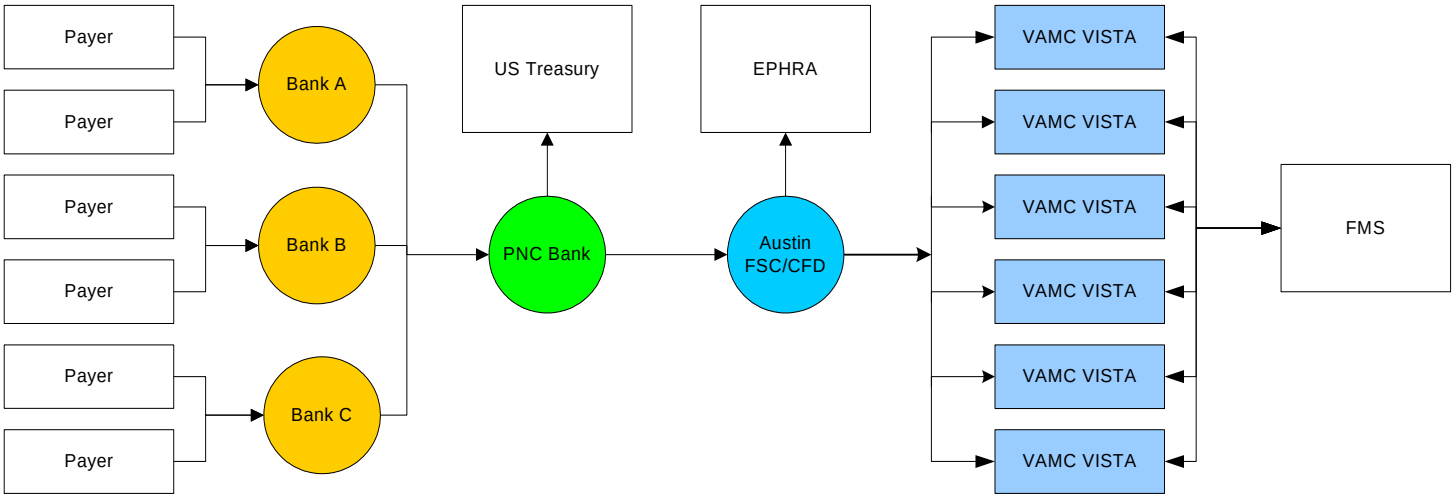

The three day cycle detailed:

- **Day 1** – EFT populates VistA with a system generated electronic (e) receipt and transmits to FMS with a CR document during the nightly process. This shows in the VistA system as 'NA' when viewing the worklist. Deposit can be viewed by looking at Receipt profile, List of receipts, or deposit processing.

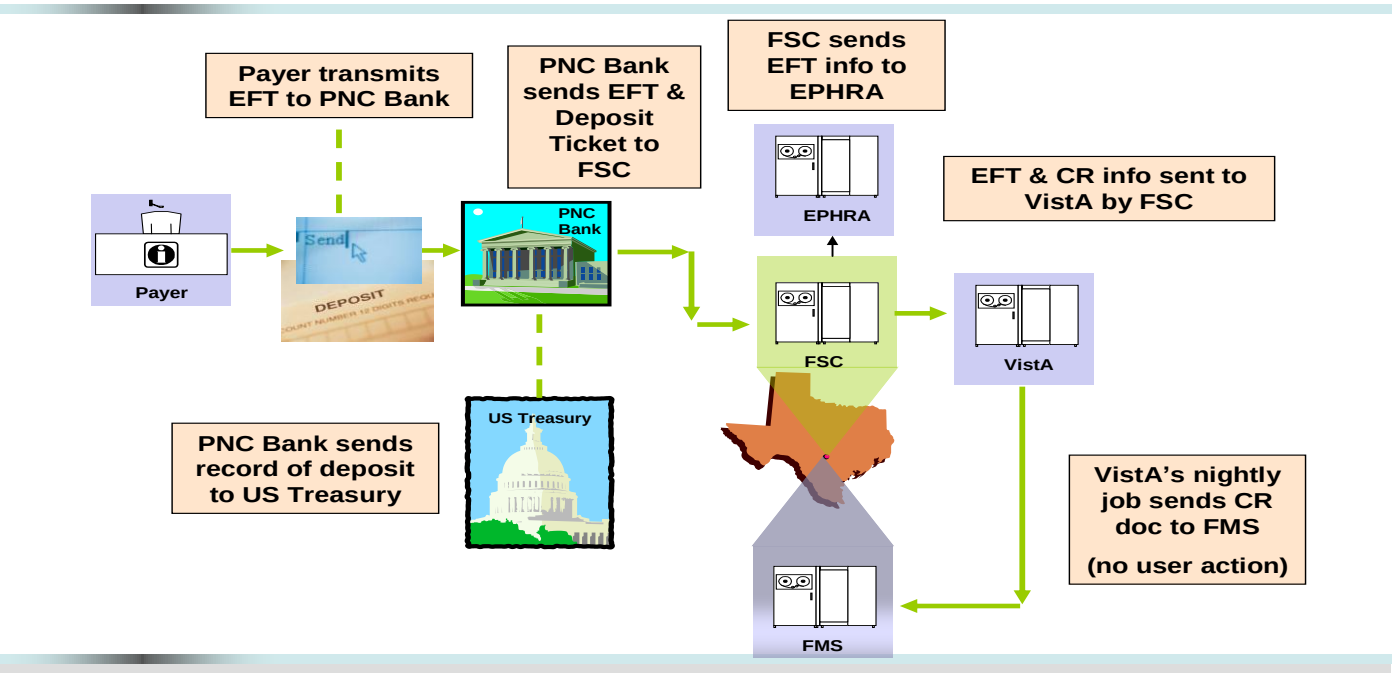

- **Day 2** – FMS accepts deposit and sends message back to VistA during nightly process. The money is deposited into 528704/8NZZ. This shows in the VistA system as 'transmitted' when viewing the worklist.

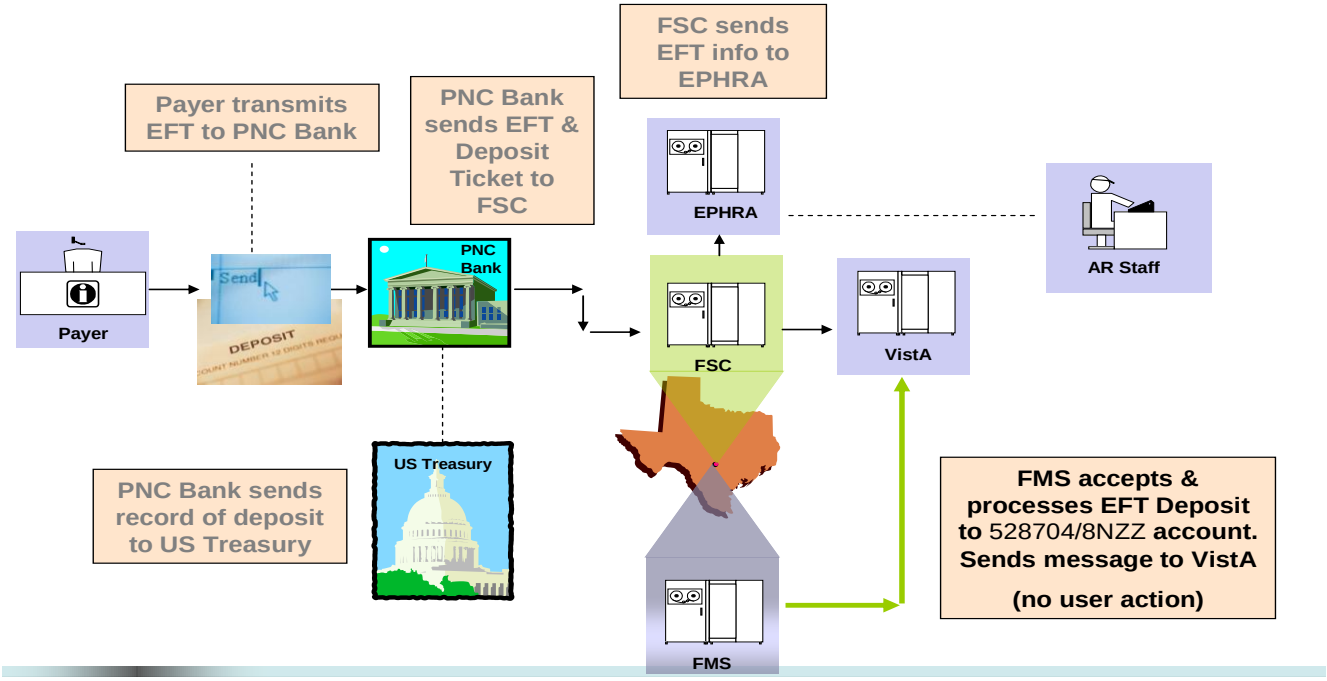

- **Day 3** – EFT is ready to be processed with ERA or paper EOB and transmit back to FMS. This shows in the VistA system as 'accepted' when viewing the worklist.

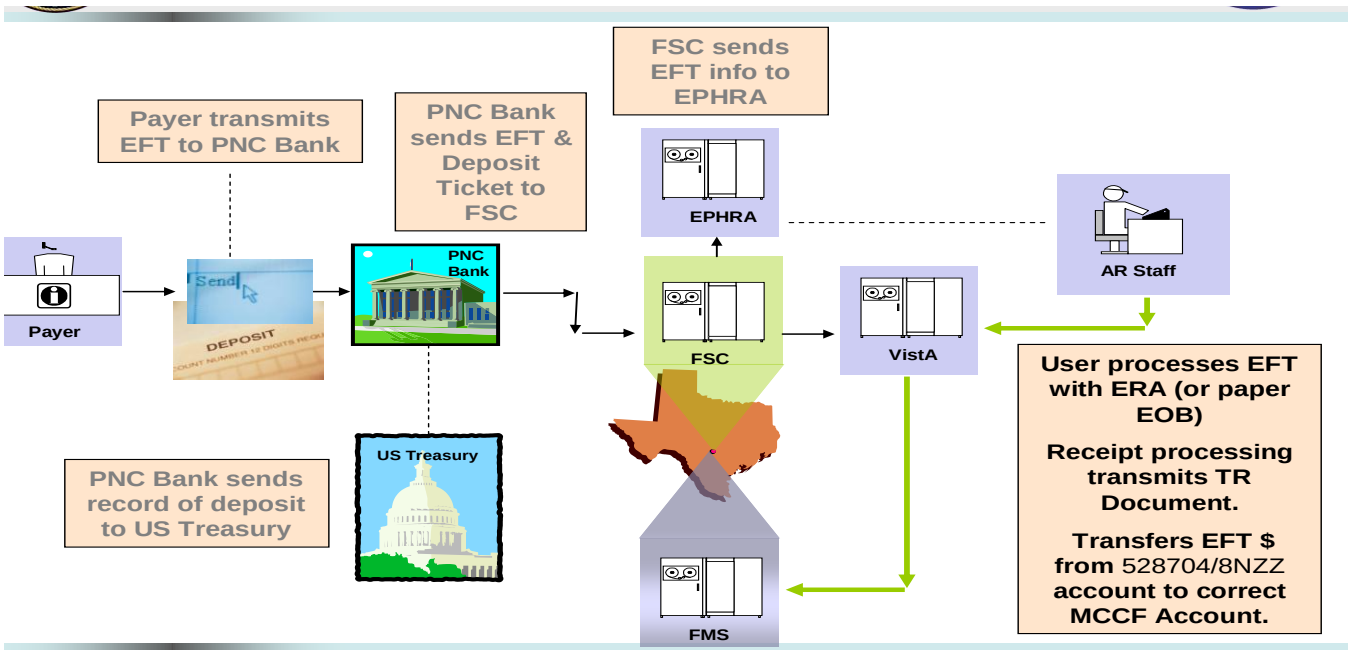

The screen capture below demonstrates how the three day cycle shows on your worklist in your VistA system. This information can also be viewed on the Daily Activity Report and the EFT unmatched aging report:

```
#    ERA #   TRACE#/PAYER NAME/MATCH STATUS  ERA PAID DT  TOT AMT PAID   DT REC'D
             MATCHED                         EFT RECEIPT STATUS: ACCEPTED BY FMS

    -25659   807178630000058                  6/28/07        18465.30   6/28/07
             AETNA                           APPROX # EEOBs: 134
             MATCHED                         EFT RECEIPT STATUS: ACCEPTED BY FMS

    -25761   807180600000099                  7/2/07         1496.24   7/2/07
             AETNA                           APPROX # EEOBs: 3
             MATCHED                         EFT RECEIPT STATUS: TRANSMITTED

    -25792   807183650000045                  7/3/07          877.81   7/3/07
             AETNA                           APPROX # EEOBs: 12
             UNMATCHED                       N/A
```

Day 3

Day 2

Day 1

When an e-receipt is processed to FMS, a TR document (transfer document) is created. The TR document transmits during the nightly process. The TR document does not transmit money to FMS, but rather transfers funds from 528704/8NZZ to the appropriate MCCF appropriation of 528704. The TR document number can be viewed in the VistA system under the Receipt Processing Option.

```
  Receipt #: E07062500                    Type of Payment: EDI LOCKBOX
FT Detail #: 728 AETNA   ERA #: 25210  Receipt Status: CLOSED
MS Document: TR-581KXXXXXX              FMS Doc Status: ACCEPTED BY FMS
#    Account                          Pay Date  Open By  Edit By  Pay Amt  Proc Amt
```

4.2. EFT Deposits

To view a copy of the CR code sheet on the CRLT table, enter the transaction code (CR) and the CR number. This screen shows the Fund and RSC the money dropped into in FMS. For this example, the CR number is 555K4A000C:

```
ACTION: N TABLEID: CRLT USERID: S555 SLK

                    *** CASH RECEIPTS LINE INQUIRY SCREEN ***
 KEY IS TRANS CODE, CR NUMBER, LINE
 TRANS CODE: CR CR NUMBER: 555K4A000C
 01-
                         LINE: 001                 BFYS: 04                    FUND: 5287.4
          STATION/SAT: 555            FCP/PRJ:                              JOB NO:
         COST CTR/SUB:                BOC/SUB:                            REPT CATG:
         REV SRCE/SUB: 8NZZ         CLSD BFYS:                            CLSD FUND:
           GL ACCOUNT:             TRANS TYPE: 23                        TRAVEL TYPE:
 VENDOR/PROVIDER: MCCFVALUE                  UNAPPLIED DEPOSIT NO:
                  AMOUNT:                 1,480.00                       CHECK NUMBER:
                  REF TC:               REF DOC NO:                          REF LINE:
                     ADV:               ADVANCE NO:                           ADV IND:
        AGREEMENT NO:                                                     ACTION OUT:
           DESCRIPTION:
```

View the GLDB table to see all deposits into the GL ACCT and RSC for approximately 2 months. For this table, select the FY, BFY, FUND, GL ACCT, AD/OF, STN, and RSC.

```
 ACTION: R TABLEID: GLDB USERID: S570 SLK
              *** GENERAL LEDGER DETAIL BALANCE INQUIRY SCREEN ***

 FY      BFY     FUND    GL ACCT   AD/OF    STN     COST CTR    FCP/PRJ     BOC/REV SRCE    TYPE
 --     -----   ------   -------   ----    -------  --------   ---------    ------------    ----
 04      04     5287.4   1029         10        570                              8NZZ       01

   TRANS ID    DATE    FM     REF DOCUMENT     VENDOR            VENDOR INV #                AMT
 ----------    ------  --     -------------    -------           -----------------     ----------
 CR555K4A000C  031003  01                                        MCCFVALUE
                                                                                        1,480.00
 CR555K4A000H  031004  01                                        MCCFVALUE
                                                                                          428.34
 CR555K4A000Q  031007  01                                        MCCFVALUE
                                                                                           37.64
 CR555K4A0001  031002  01                                        MCCFVALUE
                                                                                        1,084.95
```

All transfers in from CR Documents will show up under GL ACCT 1029. All transfers, from the TR documents will show up on this table under the GL ACCT 1030.

Key:

FY	Fiscal Year
BFY	Budget Fiscal Year
FUND	Fund
GL ACCT	General Ledger Acct
AD/OF	Administrative Office
STN	Station
BOC/REV SRCE	Revenue Source Code

(This page included for two-sided copying.)

5. NPI

The facility and providers NPI can be found within the ERA by viewing the ERA details. This was an added function by Patch.

```
     EDI LOCKBOX WORKLIST - ERA DETAIL                10/10/03       Page: 2
==============================================================================
PATIENT: IBpatient,One A/5555           CLAIM #: XXX-KXXXXXX

**EOB PROVIDER(S)/NPI                  CLAIM PROVIDER(S)/NPI**
---------------------                  ------------------------
BILLING: /XXXXXXXXXX                   XXXXXXXX VAMC/XXXXXXXXXX
RENDERING:                             Ibclerk,One/XXXXXXXXXX

EOB GENERAL INFORMATION:
 Type        : NORMAL EOB               EOB Paid DT  : 02/07/07
 Entry Dt/Tm :02/09/07 4:32 pm          Claim Status : PROCESSED
 Entry Dt/Tm :02/09/07 4:32 pm          Review Status: ACCEPTED-COMPLETE EOB
 Entered By  :                          Insurance Seq: PRIMARY
 Last Edited : 02/09/07 6:50 pm         Last Edit By : POSTMASTER
 Patient Name: IBpatient,One A          Pt. Relation : PATIENT
 Insured Name: IBpatient,One A          Insured ID   : XXXXXXXXX
 Claim Rec'd Date     :
 Other Subscriber Name: XXXXX,XXXX X

Enter RETURN to continue or '^' to exit:
```

(This page included for two-sided copying.)

6. Additional Functionality

6.1. Auto–Audit

New functionality is included with the 3rd Party EDI Lockbox patch. It allows EDI claims to automatically be audited and assigned an active status. Integrated Billing was modified to update AR whenever an EDI electronic status message is received for a bill that corresponds to one of these statuses:

A3 CLAIM SENT FOR ALL PAYER ROUTING
AC CLAIM FORWARDED TO PRINT CENTER
A7 CLAIM SENT TO PAYER, NO FURTHER UPDATES TO FOLLOW
A8 CLAIM SENT TO PAYER
AA CLAIM RECEIVED, PRINTED AND MAILED BY PRINT CENTER
2P CLAIM ACCEPTED BY CLEARINGHOUSE- NO FURTHER UPDATES TO FOLLOW
10 Claim sent to Payer
11 Claim sent to Payer

The auto-audit function must be made active by using the **`Update Rate Types For Auto-audit`** option located in the `Supervisor's AR Menu`. Once the rate type is selected, answer YES to the prompt `AUTO-AUDIT`? Then enter the appropriate `Bill Resulting From` reason must be selected. This reason will be assigned to every EDI claim for this rate type that is auto-audited by the system. To turn off auto-audit for a rate type, select the option, enter the rate type and answer NO to the prompt `AUTO-AUDIT`?. This deletes the `Bill Resulting From` field from for the rate type selected and from that point on, no more bills having that rate type will be auto-audited.

6.1.1. Update Rate Types For Auto-audit

To activate auto-audit for EDI claims within a particular rate type proceed with the following selections:

```
Select Supervisor's AR Menu Option: Update Rate Types For Auto-audit

Select RATE TYPE NAME: ??
   Choose from:
   1            CRIME VICTIM  Who's Responsible: INSURER
   2            DENTAL  Who's Responsible: PATIENT
   3            HUMANITARIAN  Who's Responsible: PATIENT
   4            INTERAGENCY  Who's Responsible: INSURER
   5            MEANS TEST  Who's Responsible: PATIENT
   6            MEDICARE ESRD  Who's Responsible: OTHER (INSTITUTION)
   7            NO FAULT INS.  Who's Responsible: INSURER
   8            REIMBURSABLE INS.  Who's Responsible: INSURER
   9            SHARING AGREEMENT  Who's Responsible: OTHER (INSTITUTION)
   10           TORT FEASOR  Who's Responsible: INSURER
   11           WORKERS' COMP.  Who's Responsible: INSURER
   12           CHAMPVA REIMB.INS.  Who's Responsible: INSURER
   .
Select RATE TYPE NAME: REIMBURSABLE INS.    Who's Responsible: INSURER
AUTO-AUDIT?: NO//  YES
BILL RESULTING FROM: HI       HEALTH INSURANCE 3RD PARTY BILLING
         ...OK? Yes//  <RET>
```

6.2. Automatic Match EFTs to ERAs — Acronym: MA

This option manually starts the routine that runs as part of the normal nightly processing. Only select this option if you need to initiate the process of matching the 3rd Party Lockbox EFT records that have not yet been matched to the electronic ERAs currently on file. The process must be queued and only one of these processes can be running at any given time.

6.3. Manual Match EFT-ERA — Acronym: MM

This option allows the user to manually match an EFT detail record and an ERA record and will mark the 2 records as matched. Use this option *only* if the automatic matching function is not able to make the match. The EFT and ERA selected must both be unmatched and the ERA must not be associated with a receipt. This action may be necessary if the Trace Numbers or Insurance Company Ids do not match on the 2 records, but the payer has confirmed they are indeed supposed to be matched.

6.4. Mark Ø-Balance EFT Matched — Acronym: ZB

There may be times when an EFT is received with a zero payment and has a paper EEOB associated with it. This option allows the user to select an EFT detail record and mark it as matched to a paper EEOB. This removes it from the EFT UNMATCHED AGING REPORT.

6.5. Move ERA Total to Suspense — Acronym: MO

It is possible that situations can occur where posting of the EFT detail from an ERA cannot be done in receipt processing. This function allows the user to remove the payment from the fund 5287.4/RSC 8NZZ, and moves these funds to Suspense. The ERA record must be matched to an EFT and may not already have a receipt attached to it. The option forces a 'TR' document to be generated from the EDI Lockbox deposit account to the suspense account. NO posting to individual claims in AR are accomplished by this option - postings must be entered manually via the Link Payment option. FMS is updated *only* if there is a payment indicated on the EFT.

6.6. Unmatch an ERA Acronym: UN

If an ERA has been marked with a match status in error, this option allows it to be marked as unmatched again. Only select an ERA that was previously marked as matched and that has had no receipt created for it yet. If the Worklist entry has been created, it will be deleted before it allows the unmatch to occur. If the ERA was matched to an EFT, the EFT will be remarked as unmatched too.

6.7. Update ERA Posted using Paper EOB Acronym: UP

When Payers first come on-line with the 3rd Party EDI Lockbox functions it is possible for a facility to receive both EEOB data and paper EOBs at the same time. As a result, there may be times when the EOB data gets posted from the paper EOB to AR and FMS without referencing the ERA. In this situation, the ERA will indicate it is unposted. Use this option to mark the ERA as POSTED. It requires entering the receipt # used to post the paper EOB information.

6.8. Mark ERA Returned to Payer Acronym: RET

There may be times when a paper check has been incorrectly received as payment for an ERA, or the paper check will create a duplicate payment. In such cases, you will want to return the check to the payer before it is deposited. This option allows the user to mark the corresponding ERA as not paid/returned to payer, and will remove it from the Worklist for unmatched ERAs. Use this option ***only*** if the deposit has not been made.

(This page included for two-sided copying.)

7. Reports

The option **REP EDI Lockbox Reports Menu…** contains a menu of various EDI Lockbox Reports:

DA Daily Activity Report
TR EEOB Transfer Reports
EFT EFT Aging Report
ERA ERA Aging Report
UN Unapplied EFT Deposits Report
AB Active Bills with EEOB Report
DEP EFT Deposit Reconciliation Report
VP View/Print ERA

7.1. Daily Activity Report Acronym: DA

The Summary Daily Activity Report is the same as the report sent via Mailman to the RCDPE PAYMENTS mail group as part of the nightly job. It provides total data on all EFT deposits. The report can be run on-demand with detail by date or just the summary data for the date range. Detail format provides a detailed list of all EFT deposits received within the selected date range and the corresponding EFT payments from the payers comprising each deposit. The following information appears on the Daily Activity Statement.

- Deposit Ticket Information – including deposit number, date received, trace #, who payment was from.
- EFT's that have been matched to an ERA
- Accepted EFT's represent total dollars posted to FUND 5287.4/Revenue Source Code 8NZZ.

7.1.1. When to run this report

Review the Daily Activity Report on an as-needed basis to monitor electronic funds deposited to the US Treasury that are associated with your site.

Reviewing at the end of the month will ensure all deposits are in an 'accepted' status.

7.1.2. How to run this report

To run the Daily Activity Report in detail proceed through the following steps:

```
Select EDI Lockbox Reports Menu Option -  DA  Daily Activity Report

(S)UMMARY OR (D)ETAIL?: D// <RET> ETAIL AND TOTALS
START DATE: T-10  (APR 28, 2003)
END DATE: APR 28,2003// T  (MAY 08, 2003)
DEVICE: HOME// <RET>  LAT DECSERVER    Right Margin: 80// <RET>
```

```
                    EDI LOCKBOX DAILY ACTIVITY DETAIL REPORT         Page: 1
                                RUN DATE: 10/13/10
```

```
DATE RANGE SELECTED: 2/3/97-10/13/10

DEP #   DEPOSIT DT                        DEP AMOUNT          FMS DEPOSIT STAT

   EFT #                        DATE PD   PAYMENT AMOUNT     ERA MATCH STATUS
         EFT PAYER TRACE #
             PAYMENT FROM
                                              DEP RECEIPT #  DEP RECEIPT STATUS
==============================================================================
                       DATE EFT DEPOSIT RECEIVED: 1/14/04

469082  1/7/04                            136.49              NO FMS DOC
   1                            1/7/04    10.80              MATCHED/ERA #10
         XXXXXXXXXXXXXXX
             IBinsurance Company One/5555555555

   2                            1/7/04    125.69             MATCHED/ERA #12
         XXXXXXXXXXXXXXX
             IBinsurance Company Two/4444444444

Enter RETURN to continue or '^' to exit:
```

To run the Daily Activity Report in summary proceed through the following steps:

```
Select EDI Lockbox Reports Menu Option -  DA  Daily Activity Report

(S)UMMARY OR (D)ETAIL?: D// SUMMARY TOTALS ONLY
START DATE: MAY 7, 2003
END DATE: MAY 08, 2003// MAY 07, 2003
DEVICE: HOME// <RET>  LAT DECSERVER    Right Margin: 80// <RET>
```

```
            EDI LOCKBOX DAILY ACTIVITY SUMMARY REPORT              Page: 1
                         RUN DATE: 5/8/03

DATE RANGE SELECTED:  5/7/03-5/7/03
==============================================================================
**TOTALS FOR DATE: 5/7/03      # OF DEPOSIT TICKETS RECEIVED:  14
                            TOTAL AMOUNT OF DEPOSITS RECEIVED:  $9891.79

                  DEPOSIT AMOUNTS SENT TO FMS:
                                     ACCEPTED: $0.00
                                       QUEUED: $9892.79
                                 ERROR/REJECT: $0.00
                                   NOT IN FMS: $0.00

                        # EFT PAYMENT RECORDS: 14
                       # EFT PAYMENTS MATCHED: 7
                 MATCHED PAYMENT AMOUNT POSTED: $0.00

Enter RETURN to continue or '^' to exit:
```

7.2. EEOB Transfer Reports Acronym: TR

This option provides the ability to produce one or both of the EEOB Transfer reports. The TRANSFER IN Report lists all those EEOBs that were transferred into your site from another site who had received it in error. The TRANSFER OUT report lists all those EEOBs that your site sent to another site because they were received in error.

7.2.1. When to run this report:

Run the EEOB Transfer Reports on an as-needed basis to monitor electronic EEOBs transferred to and from your site. Remember, members of the RCDPE PAYMENTS mail group are notified when an EEOB is transferred to your site from another VAMC.

7.2.2. How to run this report

To run the EEOB Transfer Report to see EEOBs transferred OUT to another VAMC proceed through the following steps:

```
Select EDI Lockbox Reports Menu Option: TR  EEOB Transfer Reports
SELECT REPORT:  (I/O/B): ? (to view options)
Enter a code from the list.
     Select one of the following:
          I     TRANSFER IN REPORT
          O     TRANSFER OUT REPORT
          B     BOTH REPORTS

SELECT REPORT:  (I/O/B): O  TRANSFER OUT REPORT
START DATE: T-10  (MAR 28, 2003)
END DATE: T  (APR 07, 2003)
DEVICE: HOME// <RET>  LAT DECSERVER    Right Margin: 80// <RET>
```

```
                    EDI LOCKBOX EEOBs TRANSFERRED OUT REPORT         Page: 1
                               RUN DATE: 10/10/03
DATE RANGE SELECTED: 10/3/03-10/10/03

BILL #       TRANS DT  TRANS TO             EEOB DATE  AMT PAID     STATUS
==============================================================================
603636477    10/9/03   LEXINGTON-LD VAMC     4/30/03   287.29       NOT REC'D

 TOTAL # EEOBs NOT CONFIRMED AS 'RECEIVED' BY OTHER SITES: 1
 TOTAL # EEOBs STILL JUST 'RECEIVED' BY OTHER SITES: 0
 TOTAL # EEOBs ACCEPTED BY OTHER SITES: 0
 TOTAL # EEOBs NOT ACCEPTED BY OTHER SITES: 0

Enter RETURN to continue or '^' to exit:
```

7.3. EFT Unmatched Aging Report Acronym: EFT

The EFT Unmatched Aging Report contains a list of all Electronic Funds Transfer (EFT) records that have not been successfully matched to ERAs or to paper EOBs within the user-specified number of days. Within EDI Lockbox Site Parameters, each site can set the number of days an EFT should wait before appearing on this report. The default parameter is set at 5 days. The report can be run with details such as the error log and update history for each record, or in summary.

7.3.1. When to run this report

Print the EFT Unmatched Aging Report on a regular basis, as determined by your site, to monitor outstanding electronic funds requiring a match to an ERA or even a paper EEOB. It can be run in Summary or Detail. The detailed screen report will indicate error messages and other relevant information not shown in the summary report.

EFT's should be matched/worked within 15 days but should not be aged more than 30 days.

7.3.2. How to run this report

To run the summary EFT Unmatched Aging Report proceed with the following selections:

```
Select EDI Lockbox Reports Menu Option: EFT  EFT Unmatched Aging Report

Enter the minimum # of days elapsed before including on report (0-1000): 5//
DO YOU WANT (S)UMMARY OR (D)ETAIL?: SUMMARY// <RET>
DEVICE: HOME// <RET>  HOME
```

```
                  EDI LOCKBOX EFT UNMATCHED AGING SUMMARY REPORT      Page: 1
                     MINIMUM DAYS NOT MATCHED FOR AGING: 5
                               RUN DATE: 3/30/03

AGED
DAYS  TRACE #
          DEPOSIT FROM/ID                                            DEP DATE
      FILE DATE     DEPOSIT AMOUNT  DEP #    DEPOSIT POST STATUS
==============================================================================
   3  XXXXXXXXXXXXXXXX
          IBinsurance Company One/55555555555                        3/25/03
      10/7/03                0.00  469007   NOT POSTED TO 8NZZ
   3  XXXXXXXXXXXXXX
          IBinsurance Company Two/44444444444                        3/25/03
      10/7/03               36.91  469015   POSTED TO 8NZZ ON 10/7/03
   3  XXXXXXXXX
          IBinsurance Company Three/3333333333                       4/11/03
      10/7/03            10578.15  469010   POSTED TO 8NZZ ON 10/7/03
   3  XXXXXXXXX
          IBinsurance Company Four/2222222222                         4/8/03
      10/7/03             4064.00  469009   POSTED TO 8NZZ ON 10/7/03

TOTALS:
 NUMBER AGED ELECTRONIC EFT MESSAGES FOUND: 4
 AMOUNT AGED ELECTRONIC EFT MESSAGES FOUND: 14679.06
```

To run the detailed EFT Unmatched Aging Report proceed with the following selections:

```
Select EDI Lockbox Reports Menu Option: EFT  EFT Unmatched Aging Report

Enter the minimum # of days elapsed before including on report (0-1000): 5//
DO YOU WANT (S)UMMARY OR (D)ETAIL?: SUMMARY// DETAIL
DEVICE: HOME// <RET>  HOME
```

```
                    EDI LOCKBOX EFT UNMATCHED AGING DETAIL REPORT      Page: 1
                       MINIMUM DAYS NOT MATCHED FOR AGING: 5
                                 RUN DATE: 3/30/03

AGED
DAYS  TRACE #
          DEPOSIT FROM/ID                                              DEP DATE
FILE DATE     DEPOSIT AMOUNT  DEP #    DEPOSIT POST STATUS
==============================================================================
   3  XXXXXXXXXXXXXXX
          IBinsurance Company One/55555555555                          3/25/03
      10/7/03                 0.00  469007   NOT POSTED TO 8NZZ

   3  XXXXX-XXXXXXXX
          IBinsurance Company Two/44444444444                          3/25/03
      10/7/03                36.91  469015   POSTED TO 8NZZ ON 10/7/03

   3  XXXXXXXXX
          IBinsurance Company Three/3333333333                         4/11/03
      10/7/03             10578.15  469010   POSTED TO 8NZZ ON 10/7/03

   3  XXXXXXXXX
         IBinsurance Company Four/2222222222                           4/8/03
      10/7/03              4064.00  469009   POSTED TO 8NZZ ON 10/7/03


TOTALS:
 NUMBER AGED ELECTRONIC EFT MESSAGES FOUND: 4
 AMOUNT AGED ELECTRONIC EFT MESSAGES FOUND: 14679.06
```

7.4. ERA Unmatched Aging Report — Acronym : ERA

This option produces the ERA aging report containing a list of all Electronic Remittance Advice (ERA) records that have not been successfully matched to electronic EFTs within the user-specified number of days. Within EDI Lockbox Site Parameters, each site can set the number of days an ERA should wait before appearing on this report. The report can be run with or without details for each record.

7.4.1. When to run this report

Print the ERA Unmatched Aging Report on a regular basis, as determined by your site, to monitor outstanding electronic remittance advices requiring a match to an EFT or paper check. It can be run in Summary or Detail. The detailed screen report will indicate error messages and other relevant information not shown in the summary report.

ERA's should be matched/worked within 15 days but should not be aged more than 30 days.

7.4.2. How to run this report

To run the summary ERA Unmatched Aging Report proceed with the following selections:

```
Select EDI Lockbox Reports Menu Option: ERA  ERA Unmatched Aging Report

Enter the minimum # of days elapsed before including on report (0-1000): 7// 7
DO YOU WANT (S)UMMARY OR (D)ETAIL?: SUMMARY// <RET>
DEVICE: HOME//   LAT DECSERVER    Right Margin: 80//
```

```
                      EDI LOCKBOX ERA AGING SUMMARY REPORT           Page: 1
                          MINIMUM DAYS FOR AGING: 7
                               RUN DATE: 10/13/10

AGED
DAYS  TRACE #
          PAYMENT FROM/ID                                                ERA DATE
                FILE DATE      AMOUNT PAID  EEOB CNT   ERA #
==============================================================================
1335  XXXXXXXXXX
          IBinsurance Company One/55555555555                            2/14/07
                2/16/07             129.26  1          14041
1335  XXXXXXXXXX
          IBinsurance Company One/55555555555                            2/14/07
                2/16/07             123.48  1          14043
1335  XXXXXXXXXX
          IBinsurance Company One/55555555555                            2/14/07
                2/16/07              18.53  1          14044
1331  XXXXXXXXXX
          IBinsurance Company Two/44444444444                            2/14/07
                2/20/07               8.32  1          14056

Enter RETURN to continue or '^' to exit:
```

To run the DETAIL ERA Unmatched Aging Report proceed with the following selections:

```
Select EDI Lockbox Reports Menu Option: ERA  ERA Unmatched Aging Report

Enter the minimum # of days elapsed before including on report (0-1000): 7// 7
DO YOU WANT (S)UMMARY OR (D)ETAIL?: SUMMARY// DETAIL
DEVICE: HOME//   LAT DECSERVER    Right Margin: 80//
```

```
                    EDI LOCKBOX ERA AGING DETAIL REPORT            Page: 1
                         MINIMUM DAYS FOR AGING: 7
                              RUN DATE: 10/13/10

AGED
DAYS  TRACE #
          PAYMENT FROM/ID                                              ERA DATE
                FILE DATE      AMOUNT PAID  EEOB CNT   ERA #
==============================================================================
1335  XXXXXXXXXX
          IBinsurance Company One/55555555555                          2/14/07
                2/16/07            129.26  1          14041
        EEOB Seq #: 1  EEOB on file for KXXXXXX  129.26

1335  XXXXXXXXXX
           IBinsurance Company One/55555555555                         2/14/07
                2/16/07             18.53  1          14044
        EEOB Seq #: 1  EEOB on file for KXXXXXX  0.00
        EEOB Seq #: 2  EEOB on file for KXXXXXX  38.30

1331  XXXXXXXX
           IBinsurance Company Two/44444444444                         2/17/07
                2/20/07              6.48  2          14093
        EEOB Seq #: 1  EEOB on file for KXXXXXX  1.82
        EEOB Seq #: 2  EEOB on file for KXXXXXX  4.66

1331  XXXXXXXX
           IBinsurance Company Two/44444444444                         2/17/07
                2/20/07             23.05  2          14094

Enter RETURN to continue or '^' to exit:
```

7.5. Unapplied EFT Deposits Report — Acronym: UN

This option produces a list of EFT deposits that have EFT detail records whose funds have not been applied to bills in A/R. These funds remain in FUND 5287.4, RSC 8NZZ**.** Only those EFTs that have either not been matched to a receipt or have been matched to a receipt, but the receipt has not been posted to FMS will appear on this report

EFT's posted using a paper EOB will continue to show on this report. This will be updated with a future enhancement.

7.5.1. When to run this report

You will run the Unapplied EFT Deposits Report on a regular basis, as determined by your site, to monitor funds outstanding in FUND 5287.4, REVENUE SOURCE CODE 8NZZ**.**

7.5.2. How to run this report

To run the Unapplied EFT Deposits Report proceed with the following selections:

```
Select EDI Lockbox Reports Menu Option: un  Unapplied EFT Deposits Report

Start with Deposit Date: FIRST// <RET>
DEVICE: HOME// <RET>  LAT DECSERVER    Right Margin: 80// <RET>
HOME//   LAT DECSERVER    Right Margin: 80//
```

```
ALL UNAPPLIED EFT PAYMENT DEPOSITS                10/13/10@08:54:50   PAGE: 1

    DEPOSIT #   DEPOSIT DATE      TOT AMT OF DEPOSIT    TOT AMT UNPOSTED
     PAYER/ID
      TRACE #                                            PAYMENT AMT  RECEIPT #
        ERA MATCHED                                 FMS DOC #/STATUS
==============================================================================
                            DEPOSIT DATE: Dec 10, 2003

    469064      12/10/03          122.72                122.72
     IBinsurance Company One/55555555555
      XXXXXXXXXXXXXXX                                    122.72
        PAPER EOB                                   NO FMS DOCUMENT


                            DEPOSIT DATE: Dec 16, 2003

    469068      12/16/03          5.34                  5.34
     IBinsurance Company One/55555555555
      XXXXXXXXXXXXXXX                                    5.34
        PAPER EOB                                   NO FMS DOCUMENT


Enter RETURN to continue or '^' to exit:
```

7.6. Active Bills with EEOB Report — Acronym: AB

This report was created in order to enable one to manage ACTIVE third party insurance claims that have an EDI Lockbox EEOB, but have a balance remaining. All active bills that have EEOBs associated with them and also have a balance >0 will be displayed, sorted by insurance company.

7.6.1. When to run this report

Run this report on a routine basis, as determined by your site, in order to identify any payments that have been posted to accounts without any contractual adjustments and analysis having been performed. This report is a very useful tool for keeping Account Receivables from becoming aged.

The ERA Unmatched Aging report should be current before working this report.

NOTE*:* It is recommended that the report is queued, since it will take a while to print.

7.6.2. How to run this report

To run the Active Bills with an EEOB > 0 report, proceed with the following steps:

```
Select EDI Lockbox Reports Menu Option: ab  Active Bills with EEOB Report
```

```
RUN REPORT FOR (A)LL, (S)PECIFIC, OR (R)ANGE OF INSURANCE COMPANIES?: ALL// RANG

START WITH INSURANCE COMPANY NAME: IBinsurance

GO TO INSURANCE COMPANY NAME: IBinsuranceZZZ//

WITHIN INS CO, SORT BY (P)ATIENT NAME OR (L)AST 4 OF SSN?: PATIENT NAME//
SORT PATIENT NAME (F)IRST TO LAST OR (L)AST TO FIRST?: FIRST TO LAST//
(recommend queing this report to an e-mail message or to a printer as it takes a bit
of time)
DEVICE: HOME//   TELNET DEVICE    Right Margin: 80//
```

```
EDI LOCKBOX ACTIVE BILLS W/EEOB REPORT            8/4/04         Page: 1

INSURANCE SELECTED: RANGE FROM IBinsurance-IBinsuranceZZZ

BILL #    PATIENT NAME                          SSN         INS CO NAME
        AMOUNT BILLED  AMOUNT PAID    BALANCE       DT REFERRED REG COUNSEL
           TRACE #
                                       DT REC'D DT PAID  DT POST  AMOUNT PAID
==============================================================================
KXXXXXX   IBpatient,One                         555555555   IBinsurance Co One
        211.90         0.00           211.90
          XXXXXXXXXXXXXXX
                                       6/7/04   6/9/04   6/15/04  0.00
KXXXXXX   IBpatient,Two                         444444444   IBinsurance Co One
        186.45         0.00           186.45
          XXXXXXXXXXXXXXX
                                       6/14/04  6/16/04  6/21/04  30.04
KXXXXXX   IBpatient,Three                       333333333   IBinsurance Co One
        157.61         0.00           157.61
          XXXXXXXXXXXXXXX
                                       6/18/04  6/22/04  6/24/04  0.00
KXXXXXX   IBpatient,Four                        222222222   IBinsurance Co Two
        64.50          0.00           64.50
          XXXXXXXXXXXXXXXXXXXXXXXXXXXXXXX
                                       6/24/04  6/28/04  7/2/04   40.20
```

7.7. EFT Deposit Reconciliation Report — Acronym: DEP

This report allows the site to determine which CR documents still have dollars associated with them that have not yet been transferred via TR documents from 5287.4/8NZZ into the appropriate accounts. By providing the capability to isolate those TR(s) that were manually entered on-line, creating 'bad' CR documents,

7.7.1. When to run this report

Run this report when you want to identify receipts that have been processed as non-EDI Lockbox receipts although they should have been associated with EFTs (whether an EFT-ERA or EFT-paper EOB transaction). An example of this would be a TR that was manually entered on-line, creating a 'bad' CR document.

7.7.2. How to run this report

To Run the EFT Deposit Reconciliation report, proceed through the following steps:

```
Select the EDI Lockbox Reports Menu Option: dep  EFT Deposit Reconciliation Report

SELECT THE EFT DEPOSIT DATE TO START WITH: 8/1/04  (AUG 01, 2004)

DO YOU WANT (A)LL DEPOSITS OR ONLY THOSE (N)OT FULLY TRANSFERRED?: ALL//
 DEVICE: HOME//   TELNET DEVICE    Right Margin: 80//
```

```
EDI LOCKBOX FUND 5287.4/8NZZ RECONCILIATION REPORT     8/9/04         Page: 1

DEP DATE  ENTRY#  DEP #   TOTAL DEP AMT  POST DT   RECEIPT #
     CR DOCUMENT           CR DOC STATUS
   EFT #   MATCHED TO  PAYER NAME                      PAYER ID
             TRACE #
                    RECEIPT #
               TR DOCUMENT           TR DOC STATUS
==============================================================================
8/2/04    188     469219         195.37  8/3/04
     CR-XXXXXXXXXX         ACCEPTED BY FMS
   343     ERA #XXXX   IBinsurance Company One         5555555555
             XXXXXXXXXXXXXXXXXXXXXXXXXXX
                    44449
               TR-XXXXXXX  ACCEPTED BY FMS
   344     ERA #XXXX   IBinsurance Company One         5555555555
             XXXXXXXXXXXXXXXXXXXXXXXXXXX
                    44447
               TR-XXXXXXX  ACCEPTED BY FMS
                           TOTAL AMOUNT SENT VIA 'TR' DOCUMENTS:          195.37
                           TOTAL AMOUNT STILL TO BE TRANSFERRED:          195.37
```

7.8. View/Print ERA — Acronym: VP

This option allows you to select an ERA and print or view its contents.

7.8.1. When to run this report

This option is used on an “as needed” basis.

7.8.2. How to run this report

To run the View/Print Report proceed with the following selections:

```
Select EDI Lockbox Reports Menu Option: VP  View/Print ERA
Select ELECTRONIC REMITTANCE ADVICE ENTRY: 123456TN 03-10-03  704.03
  IBinsurance Company One MATCHED

DO YOU WANT TO INCLUDE EXPANDED EEOB DETAIL?: NO// YES <RET>
DEVICE: HOME//   HOME  <RET>
```

```
     EDI LOCKBOX WORKLIST - ERA DETAIL                 10/10/03       Page: 1
==============================================================================
  **ERA SUMMARY DATA**
TRACE NUMBER: 55555555555-55555555-55555555
INSURANCE CO ID: 4444444444
ERA DATE: MAR 07, 2003                   TOTAL AMOUNT PAID: 1165.99
PAYMENT FROM: IBinsurance Company One Hundred
```

```
FILE DATE/TIME: OCT 07, 2003@14:28:16
EFT MATCH STATUS: MATCHED TO PAPER CHECK
ERA TYPE: ERA                            INDIVIDUAL EOB COUNT: 4
MAIL MESSAGE: 256                        CHECK #: 55555-555555555
DETAIL POST STATUS: NOT POSTED

  **ERA LEVEL ADJUSTMENTS**
REFERENCE NUMBER: Reference Identification
ADJUSTMENT CODE: 50                      ADJUSTMENT AMOUNT: -14.00
ADJUSTMENT TEXT: These are non-covered services because this is not deemed a `me
dical necessity' by the payer.

  **EEOB DETAIL DATA**
SEQUENCE #: 1                            EOB DETAIL: KXXXXXX
AMOUNT PAID: 0

Enter RETURN to continue or '^' to exit:
```

```
     EDI LOCKBOX WORKLIST - ERA DETAIL                10/10/03       Page: 2
==============================================================================
INSURANCE COMPANY ON BILL: IBinsurance Company One Hundred
FREE TEXT PATIENT NAME: XXXXX,XXXX X    BILLING PROVIDER NPI: XXXXXXXXXX
PATIENT: IBpatient,One A/5555           CLAIM #: XXX-KXXXXXX

**EOB PROVIDER(S)/NPI                  CLAIM PROVIDER(S)/NPI**
---------------------                  -----------------------
BILLING: /XXXXXXXXXX                   XXXXXXXX VAMC/XXXXXXXXXX
RENDERING:                             Ibclerk,One/XXXXXXXXXX

EOB GENERAL INFORMATION:
 Type        : NORMAL EOB               EOB Paid DT  : 02/07/07
 Entry Dt/Tm :02/09/07 4:32 pm          Claim Status : PROCESSED
 Entry Dt/Tm :02/09/07 4:32 pm          Review Status: ACCEPTED-COMPLETE EOB
 Entered By  :                          Insurance Seq: PRIMARY
 Last Edited : 02/09/07 6:50 pm         Last Edit By : POSTMASTER
 Patient Name: IBpatient,One A          Pt. Relation : PATIENT
 Insured Name: IBpatient,One A          Insured ID   : XXXXXXXXX
 Claim Rec'd Date     :
 Other Subscriber Name: XXXXX,XXXX X

Enter RETURN to continue or '^' to exit:
```

```
     EDI LOCKBOX WORKLIST - ERA DETAIL                 10/21/10       Page: 3
==============================================================================
PAYER INFORMATION:
 Payer Name   : IBinsurance Company One
 Payer Id     : 555555555
 ICN          : XXXXXXXXX

 Contact Phone  : 555-555-5555
 Contact e-Mail : XXXXXX@XXXX.COM
 Payer Web Site : http://www.WebSite.com
 Policy Reference: XXXXXXXXXXXXXXXXXXXXXXXXXXXXXXXXXXXXXXXXXXXXX
 XXXXXXXXXXXXXXXXXXXXXXXXXXXXXXXXXXXXXXXXXXXXXXXXXXXXXXXXXXXXX
 Cross Ovr ID : XXXXXXXXXX
 Cross Ovr Nm: XXXXXXXXXX XXXXXX


Enter RETURN to continue or '^' to exit:
```

```
     EDI LOCKBOX WORKLIST - ERA DETAIL                 10/21/10       Page: 4
==============================================================================
CLAIM LEVEL PAY STATUS:
 Tot Submitted Chrg:    1000.07         Covered Amt       :       0.00
 Payer Paid Amt    :     993.28         Patient Resp. Amt :       3.03

CLAIM LEVEL ADJUSTMENTS:
 GROUP CODE: Contractual Obligations
  REASON CODE: 122  Psychiatric reduction.
  Amount:       3.76                    Quantity: 0

MEDICARE INFORMATION:
  NONE
LINE LEVEL ADJUSTMENTS:
  #   SV DT   REVCD  PROC  MOD  UNITS  BILLED  DEDUCT  COINS    ALLOW     PYMT
  1 01/27/10        99214  25      1  1850.95    1.01   0.00     0.00   997.04
ADJ: PR  1  Deductible Amount
ADJ AMT: 1.01
ADJ: PR  45  Charges exceed your contracted/ legislated fee arrangement.
ADJ AMT: 2.02
  -REMARK CODE(1):   MESSAGE TEXT UNAVAILABLE

Enter RETURN to continue or '^' to exit:
```

8. Enhancements to non-EDI Lockbox Menus

8.1. Agent Cashier Menu

8.1.1. EX Extended Check/Trace/Credit Card Search and LP Link Payment

The AR option to perform a check search- either by check or money order- has been expanded to allow for searches based on trace number. This has been specifically tailored for electronic funds processing. Searching by Trace # can be based on Exact Match or Contains (partial):

```
Select Agent Cashier Menu Option: ex  Extended Check/Trace/Credit Card Search

Search for Check, Trace #, or Credit Card: Check// Trace #
Type of Match: Contains//
Enter the e-Payments Trace Number to Search for:
```

```
Link Payments To Accounts     Aug 09, 2004@14:55:56          Page:    1 of    2
Transactions for ALL Unapplied Payments

     Receipt      Tran   Unapplied Dep  Stat  Pay Date  Type Ck/Tr/Cd# Amt Paid
1    12693167       99    126931670099  CLOS  01/09/03  CHEC 10441820      2.07
                AcctLU:                 CRdoc: CR-603K3A00ME  ACCEPT
2    12693167      100    126931670100  CLOS  01/09/03  CHEC 10441820      4.15
                AcctLU:                 CRdoc: CR-603K3A00ME  ACCEPT
3    12693167      101    126931670101  CLOS  01/09/03  CHEC 10321902      2.16
                AcctLU:                 CRdoc: CR-603K3A00ME  ACCEPT



4    12693191      133    126931910133  CLOS  01/23/03  CHEC 10347256     72.92
                AcctLU:                 CRdoc: CR-603K3A00PN  ACCEPT
5    12496110I     434   12496110I0434  CLOS  02/26/03  CHEC 2628060       6.03
                AcctLU:                 CRdoc: CR-603K3A00UU  ACCEPT
6    12496116I     260   12496116I0260  CLOS  03/04/03  CHEC 10479385    217.56
                AcctLU:                 CRdoc: CR-603K3A00WD  ACCEPT
7    12693260       22    126932600022  OPEN  03/05/03  CHEC 10490903     37.23
                AcctLU:                 CRdoc: NOT SENT       NOT EN
8    12693260       28    126932600028  OPEN  03/05/03  CHEC 10490902     40.98
+         Enter ?? for more actions
S1   Search Check/Trace#  CS   Clear Suspense       AP   Account Profile
S2   Search Credit Card   SR   Suspense Report      RP   Receipt Profile
LP   Link Payment         SP   Show Payment         EA   Exit Action
Enter the e-Payments Trace Number to Search for:
```

Notice the new search option, S1, under Link Payment:

```
S1   Search Check/Trace#  CS   Clear Suspense       AP   Account Profile
S2   Search Credit Card   SR   Suspense Report      RP   Receipt Profile
LP   Link Payment         SP   Show Payment         EA   Exit Action
```

(This page included for two-sided copying.)

9. APPENDIX A – Helpful Links

VistaU – Vista University has online training and documentation for a number of Training Initiatives including ePayments

http://vaww.vistau.med.va.gov/VistaU/e-bp/e-Payments/default.htm

Revenue Guide - Provides a uniform and standard set of educational and reference materials for the benefit of Revenue Cycle staff and management.

http://vaww1.va.gov/cbo/revguide.asp

Washington Publishing – Provider of services, publications and products to entities that develop or consume Electronic Data Interchange Standard Transaction

http://www.wpc-edi.com/custom_html/claimadjustment.htm

ePay Rapid Response Team – email group including POC's, ePay team, FSC, and EPS. Provides responses to questions from the field

VHAePaymentsRRT@va.gov

TMS VA Talent Management System (Formerly LMS – VA Learning Management System)

https://www.tms.va.gov/plateau/user/login.jsp

(This page included for two-sided copying.)

10. APPENDIX B – Claim Level Adjustment Codes

CLAIM ADJUSTMENT GROUP CODE
Code identifying the general category of payment adjustment 1100

CODE DEFINITION

Code	Definition	Description
CO	Contractual Obligations	Used when a joint payer/payee contractual agreement or a regulatory requirement resulted in an adjustment.
CR	Correction and Reversals	Used for corrections and reversals to PRIOR claims.
OA	Other adjustments	
PI	Payor Initiated Reductions	Used when, in the opinion of the payer, the adjustment is not the responsibility of the patient, but there is no supporting contract between the provider and the payer (i.e., medical review or professional review organization adjustments).
PR	Patient Responsibility	

(This page included for two-sided copying.)

11. APPENDIX C – Provider Level Adjustment Codes

PROVIDER LEVEL ADJUSTMENT

Provider Level Adjustment Reason Code
Code indicating reason for debit or credit memo or adjustment to invoice, debit or credit memo, or payment

CODE and DEFINITION

Code	Definition	Description
50	Late Charge	Code for the Late Claim Filing Penalty or Medicare Late Cost Report Penalty. PLB03-2 identifies the Medicare Late Cost Report Penalty with a code value of LR.
51	Interest Penalty Charge	Code for the interest assessment for late filing. Medicare Part A provides code "IP" in PLB03-2.
72	Authorized Return	Monetary amount is the provider refund adjustment. This adjustment acknowledges a refund received from a provider for previous overpayment. PLB03-2 should always contain an identifying reference number when the value is used. PLB04 should contain a negative value. This adjustment should always be offset by some other PLB adjustment referring to the original refund request or reason. For balancing purposes, the amount related to this adjustment reason code must be directly offset. Medicare A will provide code "PR" in PLB03-2.
90	Early Payment Allowance	
AM	Applied to Borrower's Account	See 2.2.10, Capitation and Related Payments or Adjustments, for additional information. Use this monetary amount for the loan repayment amount.
AP	Acceleration of Benefits	Code to reflect accelerated payment amounts or withholdings. Withholding or payment identification is indicated by the sign of the amount in PLB04. A positive value represents a withholding. A negative value represents a payment. Medicare Part A will provide code "AP" for accelerated payment amounts and code "AW" for accelerated payment withholdings in PLB03-2.
B2	Rebate	Code for the refund adjustment. Medicare Part A will provide code "RF" in PLB03-2.
B3	Recovery Allowance	Code is used by Medicare to represent the check received from the provider for overpayments generated by payments from other payers. This code differs from the provider refund adjustment identified with code 72. Part A or Part B trust fund for Medicare use is identified in PLB03-2. "RA" is used for Medicare A. "RB" is used for Medicare Part B. PLB04 should contain a NEGATIVE value. This adjustment should always be offset by some other PLB adjustment referring to the original refund request or reason. For balancing purposes, the amount related to this adjustment reason code must be directly offset.
BD	Bad Debt Adjustment	Code for the bad debt pass-through. Medicare Part A will provide code "BD" in PLB03-2.
BN	Bonus	See 2.2.10, Capitation and Related Payments or Adjustments, for additional information.
C5	Temporary Allowance	Tentative adjustment. Medicare Part A will provide code "TS" in PLB03-2.
CR	Capitation Interest	See 2.2.10, Capitation and Related Payments or Adjustments, for additional information.
CS	Adjustment	Provide supporting identification information in PLB03-2. Medicare Part A

Code	Definition	Description
		will provide code “CA” for Manual Claim Adjustment, “AA” for Receivable Today. Medicare Part A and Part B will provide code “RI” for Reissued Check Amount in PLB03-2.
CT	Capitation Payment	See 2.2.10, Capitation and Related Payments or Adjustments, for additional information.
CV	Capital Passthru	Medicare Part A will provide code “CP” in PLB03-2.
CW	Certified Registered Nurse Anesthetist Passthru	Medicare Part A will provide code “CR” in PLB03-2.
DM	Direct Medical Education Passthru	Medicare Part A will provide code “DM” in PLB03-2.
E3	Withholding	See 2.2.10, Capitation and Related Payments or Adjustments, for additional information. Medicare Part A will provide code “CW” in PLB03-2.
FB	Forwarding Balance	Monetary amount for the balance forward. A negative value in PLB04 represents a balance moving forward to a future payment advice. A positive value represents a balance being applied from a previous payment advice. A reference number should be supplied in PLB03-2 for tracking purposes. Medicare Part A will provide code “BF” for negative values and “CO” for positive values in PLB03-2.
FC	Fund Allocation	See 2.2.10, Capitation and Related Payments or Adjustments, for additional information. The specific fund should be identified in PLB03-2.
GO	Graduate Medical Education Passthru	Medicare Part A will provide code “GM” in PLB03-2.
IP	Incentive Premium Payment	See 2.2.10, Capitation and Related Payments or Adjustments, for additional information.
IR	Internal Revenue Service Withholding	
IS	Interim Settlement	Number for the interim rate lump sum adjustment. Medicare Part A will provide code “IR” in PLB03-2.
J1	Nonreimbursable	Offset claim or service level data that reflects what could be paid if not for demonstration program or other limitation that prevents issuance of payment.
L3	Penalty	Number for the capitation-related penalty, penalty withholding, or penalty release adjustment. Withholding or release is identified by the sign in PLB04. See 2.2.10, Capitation and Related Payments or Adjustments, for additional information. Medicare Part A will provide code “PW” for Penalty Withhold, “RS” for Penalty Release, and “SW” for Settlement Withhold Amount in PLB03-2.
L6	Interest Owed	Monetary amount for the interest paid on claims in this 835. Support the amounts related to this adjustment by 2-062 AMT amounts, where AMT01 is “I. ”Medicare Part A will provide code “IN” in PLB03-2.
LE	Levy	IRS Levy
LS	Lump Sum	Disproportionate share adjustment, indirect medical education pass-through, non-physician pass-through, pass-through lump sum adjustment, or other pass-through amount. The specific type of lump sum adjustment must be identified in PLB03-2. Medicare Part A will provide code: “DS” for Disproportionate Share Adjustment, “IM” for Indirect Medical Education Passthrough “NP” for Non-physician Passthrough “PS” for Passthrough Lump Sum “PO” for Other Passthrough in PLB03-2.
OA	Organ Acquisition	Medicare Part A will provide code “KA” in PLB03-2.

Code	Definition	Description
	Passthru	
OB	Offset for Affiliated Providers	Part A or Part B trust fund identification for the source of the offset is in PLB03-2. Use “OA” for the Part A trust fund and “OB” for the Part B trust fund in PLB03-2.
PI	Periodic Interim Payment	Monetary amount for the PIP lump sum, PIP payment, or adjustment after PIP. The sign of the amount in PLB04 determines whether this is a payment (negative) or adjustment (positive). Medicare Part A will provide code: “PL” for PIP Lump Sum “PP” for PIP Payment “PA” for Adjustment After PIP in PLB03-2.
PL	Payment Final	Number for the final settlement. Medicare Part A will provide code “FS” in PLB03-2.
RA	Retro-activity Adjustment	See 2.2.10, Capitation and Related Payments and Adjustments, for additional information. Medicare Part A will provide code “TR” in PLB03-2.
RE	Return on Equity	Medicare Part A will provide code “RE” in PLB03-2.
SL	Student Loan Repayment	
TL	Third Party Liability	See 2.2.10, Capitation and Related Payments or Adjustments, for additional information.
WO	Overpayment Recovery	Use for the recovery of previous overpayment. An identifying number should be provided in PLB03-2. See the notes on codes 72 and B3 for additional information about balancing against a provider refund. Medicare Part A will provide code “OR” in PLB03-2.

(This page included for two-sided copying.)

12. APPENDIX D - Definitions

Term	Definition
Austin Information Technology Center (formerly Austin Automation Center, AAC)	Located in Austin, Texas; responsible for maintaining the hardware that supports the Lockbox system, including FSC servers, the MailMan routing system, and EPHRA database
Accounts Receivable	The financial computer system used by the Department of Veterans Affairs Medical Centers.
Financial Management System	The financial computer system used by the Department of Veterans Affairs.
Software Requirements Specifications	Document that outlines the functionality requirements for a project.
Routines	A unique identifiable containment of software pertinent to a computer system function. The routines contain the programming logic to implement the functionality for the EDI Lockbox Project.
Data Dictionary	The structure of a file, table or any group of related information as defined for and by VA FileMan.
MailMan Message	The messaging system used to communicate between the users of the VISTA software. MailMan messages will be used to process automatic payments and to communicate between the Accounts Receivable software and the users.
Related SRS Module	The numeric and title of the functionality requested in the SRS, which the SDD is implementing.
Mail Group	A VA MailMan structure that defines a subset of VA MailMan users. A Mail Group is used to communicate with a group of users. The Mail Group user subset can easily be modified without having to change software logic.
Security Key	A unique entry in the Security Key file (^DIC(19.1,) which may prevent access to a specific Option by including the key as part of the options' entry in the Option file (^DIC(19,). Only users entered in the Holder field of the Security Key file may access the option.
Option	A unique method defined in the Option file (^DIC(19,). Options are usually defined as part of a user driven menu system but may be invoked as extensions of other options or VA MailMan messages.
List Manager Screen	A graphical user interface program used by VISTA to present data to the users. From the List Manager Screen, the user can select options programmed and set up for the data displayed.
Integration Agreement	Programming agreements made between two VISTA packages enabling the sharing/management of data and or functions.
Implementation Manager	The person or group whose function is to field questions and solve problems for the sites that are data or process related to transmissions from EDI Lockbox.

Term	Definition
Explanation Of Benefits	A document from a payer that details the amount of payment on a claim and if not paid in full, the reasons for it.
Electronic Remittance Advice	An electronic record transmitted to the sites with EEOB detail information included. An Electronic Remittance Advice can consist of one or more EEOBs from one payer.
Insurance Company ID	ID associating each transaction with the payer; typically the payer's tax ID number and is not related to any other Payer ID stored in VistA for other purposes.
FSC	Financial Services Center; located in Austin, Texas; FSC runs GENTRAN translator software on FSC servers; FSC servers parse incoming EFT and ERA data and routes data to the appropriate VistA AR system based on Provider Tax ID information within each transaction
GENTRAN	Software used to translate incoming 835 data into VistA readable flat file data; software is loaded onto FSC server
AITC (formerly Austin Automation Center, AAC)	Located in Austin, Texas; responsible for maintaining the hardware that supports the Lockbox system, including FSC servers, the MailMan routing system, and EPHRA database
EPHRA	EEOB and Payment Healthcare Resolution Application; Web-based archival repository and research tool; allows user to search for missing EEOBs that are not received due to incorrect routing information; allows Austin FSC 224-unit staff to route unroutable EEOB data
Posted ERA	Indicates the AR processing is complete
Unposted ERA	Indicates the AR processing is not complete; an unposted ERA needs to be processed, closed, and posted, just like a paper EOB that must be verified and/or adjusted before closing
Matched	An ERA that has been associated with an EFT, a paper check, or a zero dollar payment
Not matched	An ERA that has not yet been associated with an EFT, a paper check, or a zero dollar payment; user will always select unmatched when searching for an ERA that should match the paper check received
Worklist	A listing of all ERA information sent from payers. It can be viewed by posted or unposted ERA's, specific payers, and matched or not matched ERA's.
Sequence number	A sequential number assigned in VistA to each incoming ERA
ICN	Internal control number. This number is sent by the payer and is unique to each payer and identifies the claim in the payers system. It can be given by AR to the customer service representative at the payer to help locate the information in the payer's system.
Transaction and code sets	Standard for Electronic transactions set forth by HIPAA. Compliance is mandatory for payers, providers, clearinghouses or anyone who receives or submits electronic health information.
835	HIPAA standard terminology for an electronic health care claim payment or remittance advice

Term	Definition
Scratchpad	VistA screen containing ERA #, name and ID of payer, amount paid, and the trace number. The scratchpad also contains list manager options that conveniently store frequently used AR/ePay options in one centralized location.
FMS	Financial Management System. FMS interacts with VistA to manage VHA financial data.
CR document	Credit document; credits funds to site via FMS
TR document	Transfer document; transfers funds to appropriate revenue source code
IB	Integrated Billing Package
Batch Maintenance	Function that allows the user to break the ERA into batches, thereby allowing multiple users to work on an ERA simultaneously.
POC	Point of Contact. The ePay network includes an ePay POC per VISN.
VistaU	Vista University has online training and documentation for a number of Training Initiatives including ePayments.

(This page included for two-sided copying.)

13. APPENDIX E – 3rd Party EDI Lockbox Bulletins

EDI LBOX – ERA HAS ADJ/TAKEBACKS <payer name>	
Message sent when an EDI Lockbox ERA is received and the payer has indicated that an adjustment to individual bills OR to the site in general has been made**.**	What to do: Review the ERA to be sure the adjustment is valid. Contact the payer if the adjustment needs to be clarified.
ERRONEOUS TAX ID ON ERA	
Message sent when the payer sends an ERA to the EDI Lockbox bank and they do not include a valid V.A. tax id on the transmission. In order to correctly route the data to the proper site, the tax id number must be corrected before the data is transmitted to the site by either EPHRA or the EDI Lockbox group in Austin. If this occurs, this bulletin is received by the site to alert them that the payer has either omitted or has an erroneous tax id for the site.	What to do: Contact the insurance company and provide them with the correct tax id for the site.
EDI LOCKBOX SERVER OPTION ERROR	
Message sent when the EDI Lockbox system receives a message where: 1. Message code is invalid for EDI Lockbox 2. This message has no ending $ or 99 record. 3. Message file problem - no message stored. 4. Message file problem - message partially stored. 5. Invalid mail group designated for EDI Lockbox errors 6. Message header error – the format of the header record on an EFT or ERA was not correct.	What to do: For all situations, contact your IRM as there may be mailman or server problems or EVS if there are software errors.
EDI LBOX - NO VALID BILLS ON ERA <payer name>	
Message sent when an ERA is received and NONE of the bills included on the EEOBs are identifiable at the site.	What to do: Contact your implementation manager.

EDI LBOX ALERT - ERA/EFT NOT FROM AUSTIN	
Message sent when an ERA or EFT is received by the EDI Lockbox system and the message did not come from Austin.	What to do: Contact your IRM to report this possible breach of security
EDI LBOX EEOB - EXCEPTIONS <payer name>	
Message sent when an ERA is received and there is at least one of the following conditions: 1. There is an EEOB within the ERA that is a duplicate of an EEOB already on file 2. There is an EEOB within the ERA that references an invalid bill # for the site and there is at least one other EEOB that does reference a valid bill for the site. 3. There is an EEOB within the ERA whose payment detail could not be stored in IB. 4. There is an EEOB within the ERA that references a bill that is not active in your A/R.	What to do: 1. Contact your implementation manager, especially if the ERA is paid via EFT as this money should not be posted twice. 2. In EDI Lockbox transmission exceptions, you will find the record. Edit the claim # to be valid if the # was mis-typed or transfer to another site if not yours 3. Contact your IRM to determine if there is a software problem causing the failure. 4. Check this claim payment carefully in your A/R as the payment may be for the wrong claim or may be a duplicate payment. If posting a payment to the claim, the claim may need to be audited if the status is NEW, or re-established if the claim was previously closed.
EDI LBOX - EEOB FROM <site name> FOR <payer name>	
Message sent when an EEOB is transferred into your site from another site that received it in error.	What to do: In EDI Lockbox Data Exception Processing, find the EEOB and accept it as yours (via file EEOB) or delete it if it does not belong to you.
TOTALS MISMATCH ON EFT-ERA MATCH	
Message sent when an EFT and an ERA are matched with the same trace number and insurance company id number, but the totals indicated on the 2 records do not match.	What to do: Contact the payer to determine why this has occurred.
DUPLICATE EFT DEPOSIT RECORD RECEIVED	
Message sent when the EDI Lockbox server receives an EFT message and VistA already has a deposit and receipt posted to FMS for the deposit ticket # referenced by the EFT.	What to do: Report this to your IRM and the implementation manager to determine why it happened.
EDI LBOX ERA - DUPLICATE TRANSMISSION	
Message sent when the EDI Lockbox server receives an ERA message and the exact same ERA was received/stored previously.	What to do: Report this to your IRM and the implementation manager to determine why it happened.

EXCEPTIONS EFT DEPOSIT AND MATCH EFTs TO ERAs <date>	
Message sent when exceptions are encountered when the system attempts to post EFT deposits or to match EFTs with ERAs.	

Exception conditions include: 1. The nightly job to post EFT deposits and match EFTs to ERAs could not be run because another match process was already running. 2. An invalid checksum value was found for an EFT on file and the EFT deposit was not sent to FMS. 3. A deposit or a receipt could not be added for an EFT. The EFT deposit was not sent to FMS.	What to do: 1. Only 1 process to match ERAs to EFTs may be running at any given time. If happening on the manual process, try again later. If on the nightly job or the problem persists, show the bulletin to your IRM as they can research the problem. 2. This indicates the EFT record was modified since it was stored in VistA. IRM should be notified of the problem and the EFT will need to be retransmitted to the site from Austin (the existing record will be overwritten with the retransmitted data 3. This indicates a data problem with the record or a software problem. Ask Austin to retransmit. If the problem persists, contact your IRM and/or EVS
	s
EDI LOCKBOX TOTALS RECORD EXCEPTION	
Message sent when the EDI Lockbox server stores an ERA record in different parts. Each EEOB within the ERA is stored in IB in the EXPLANATION OF BENEFITS file. All the detail pertaining to payment made regarding the claim is stored here. The ERA total amount paid and all detail not pertaining to an individual claim is stored in A/R. This exception is received when the ERA totals record cannot be stored in A/R.	What to do: Contact EVS.
AR LOCKBOX ERA UNMATCHED AGING REPORT FOR <date>	
When received: Produced by the nightly EDI Lockbox job. It contains an ERA UNMATCHED AGING summary report.	What to do: This is FYI only. No action is needed.
AR LOCKBOX EFT UNMATCHED AGING REPORT FOR <date>	
When received: Produced by the nightly EDI Lockbox job. It contains an EFT UNMATCHED AGING summary report.	What to do: This is FYI only. No action is needed.

AUTO DAILY ACTIVITY SUMMARY REPORT - <date>	
INVALID EFT DEPOSIT NUMBER	
When received: When the EDI Lockbox server receives an EFT whose deposit number does not start with a 469 or HAC.	What to do: Contact the implementation manager.
ELECTRONIC EDI LOCKBOX MESSAGE DELETED	
When received: Any time a user uses the delete message action within EDI Lockbox transmission exception processing to delete an exception message.	What to do: FYI – you might want to follow up to be sure the deletion was justified.
ELECTRONIC EEOB DETAIL EXCEPTION REMOVED	
Any time a user uses the delete message action within EDI Lockbox data exception processing to delete an	What to do: FYI – you might want to follow up to be sure the exception removal was justified.

exception message.	
LOCKBOX EEOB DETAIL RE-FILE ATTEMPTED TO IB	
When received: When an attempt is made to re-file an EEOB that could not be stored in IB due to a data exception by using the FILE EEOB in IB action in EDI Lockbox Data Exception Processing.	What to do: FYI only. No action required.
TRANSFERRED OUT EEOB RECEIVED	
When received: When the EDI Lockbox server receives a message from a site that your site has transferred an EEOB to, indicating the EEOB has reached the site.	What to do: FYI. These messages should be filed and if, in a few days, the EEOB has not been accepted or rejected by the other site, contact the other site to expedite the process.
TRANSFERRED OUT EEOB ACCEPTED	
When received: When the EDI Lockbox server receives a message from a site that your site has transferred an EEOB to, indicating the EEOB has been accepted at the site.	What to do: Contact the other site and make arrangements to transfer the actual dollars (if any) associated with the EEOB.
TRANSFERRED OUT EEOB REJECTED	
When received: When the EDI Lockbox server receives a message from a site that your site has transferred an EEOB to, indicating the EEOB has been rejected at the site because it did not belong to them.	What to do: Try to find another site the EEOB might belong to and repeat the process of transferring the EEOB. If the EEOB cannot find a home, contact the implementation manager to help resolve the problem.

Solving ePayment Problems

How to Remove Aged EFT's from the EFT Unmatched Aging Report

IRM can use the following process to change the status of an EFT to "PAPER EOB MATCH", which will allow the EFT to fall off the aged EFT report. A complete trace number(s) is needed in order to complete the process.
Due to database integrity issue, IRM may elect not to do this work around.

```
VA FileMan Version 22.0
1 Enter or Edit File Entries
2 Print File Entries
3 Search File Entries
5 Inquire to File Entries
8 Data Dictionary Utilities ...
```

Select VA FileMan Option: ENTER or Edit File Entries

INPUT TO WHAT FILE: **EDI THIRD PARTY EFT DETAIL** (file needed)
EDIT WHICH FIELD: ALL// ??

```
Choose from:
.01 EFT TRANSACTION
.02 PAYER NAME
.03 PAYER ID
.04 TRACE #
.05 PROVIDER TAX ID SENT
.06 TAX ID CORRECTION
.07 AMOUNT OF PAYMENT
.08 MATCH STATUS
```

```
.09 RECEIPT #
.1 ERA RECORD
.11 EFT RECORDED AT SITE
.12 DATE CLAIMS PAID
.13 DATE RECEIVED
.14 TRANSACTION #
.15 ACH TRACE #
2 ERROR MESSAGES (word-processing)
```

EDIT WHICH FIELD: ALL// .08 MATCH STATUS
THEN EDIT FIELD:

Select EDI THIRD PARTY EFT DETAIL EFT TRANSACTION: <enter trace number>

MATCH STATUS: UNMATCHED// ?

Enter the status to indicate if the payment has been matched to an ERA.
Choose from:
-1 MATCHED WITH ERRORS
0 UNMATCHED
1 MATCHED
2 PAPER EOB MATCH
MATCH STATUS: MATCHED// 2 PAPER EOB MATCH

Problem Reporting Form

The problem reporting form is designed as a consistent way for sites to report problems to their ePay POC in a standard format for research and trouble shooting. If you are having a problem that needs assistance from your POC, please complete the form and email to your VISN POC. The problem reporting form is located on VistaU