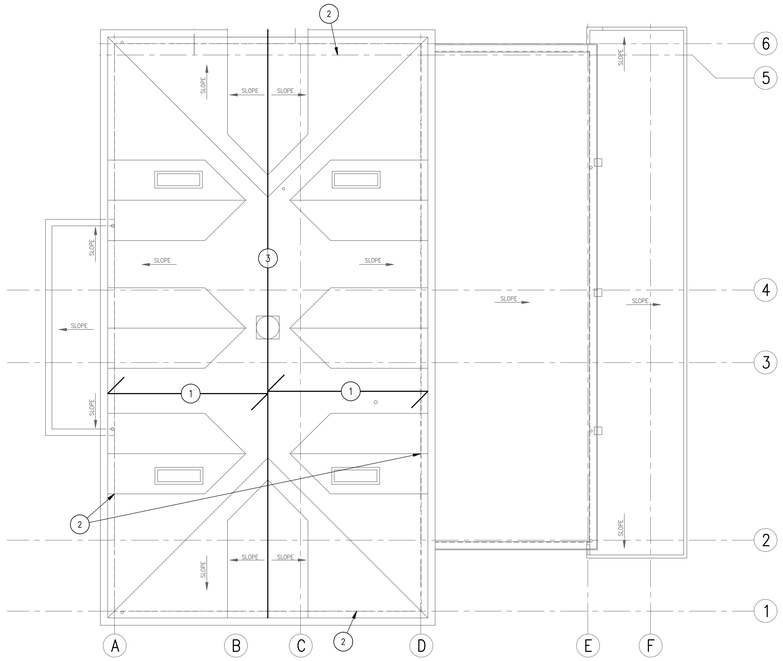

1 ROOF FRAMING PLAN BLDG. 33

0' 4' 8' 12' 16' 20'

SCALE: 1/8" = 1'-0"

SHEET NOTES:

1. (E) ROOF RAFTERS.
2. (N) EPOXIED ROOF RAFTERS TO WALL TIES, PER S2.3-4.
3. (E) RIDGE.

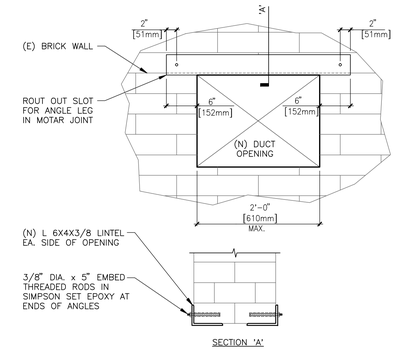

2 (N) DUCT OPENING REINF.
SCALE: 1" = 1'-0"

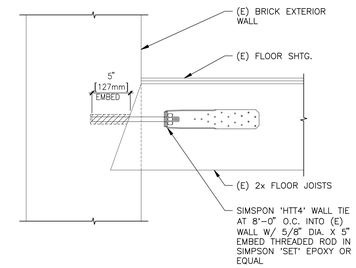

3 (PARALLEL) (N) WALL TIE AT FLOOR
SCALE: 1 1/2" = 1'-0"

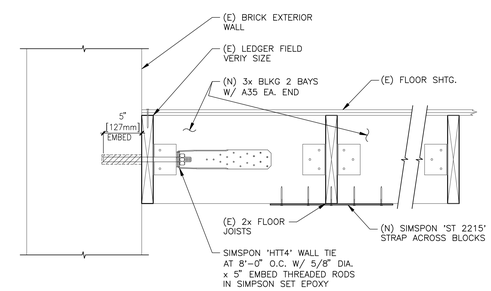

4 (PERPENDICULAR) (N) WALL TIE AT FLOOR
SCALE: 1 1/2" = 1'-0"

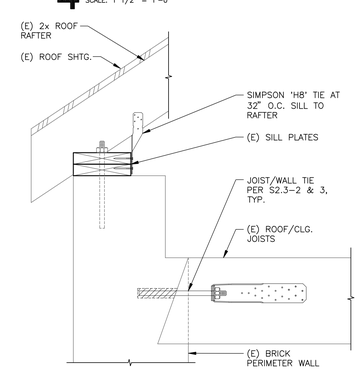

5 (N) TIES AT ROOF
SCALE: 1 1/2" = 1'-0"

95% SUBMISSION

REVISIONS | DATE

CSHQA

C.W. MOORE PLAZA
250 S. 5TH ST. • BOISE, ID 83702
(208) 343-4635 • FAX (208) 343-1858
http://www.cshqa.com

DANA M. HENNIS, P.E.
C.W. MOORE PLAZA
250 S. 5TH ST
BOISE, IDAHO
PHONE: 208-343-4635 FAX: 208-343-1858

THESE DRAWINGS AND SPECIFICATIONS, AS INSTRUMENTS OF SERVICE, ARE AND SHALL REMAIN THE PROPERTY OF THE ARCHITECT / ENGINEER WHETHER THE PROJECT FOR WHICH THEY ARE MADE IS EXECUTED OR NOT. THESE DRAWINGS AND SPECIFICATIONS SHALL NOT BE USED BY ANY PERSON OR ENTITY ON OTHER PROJECTS, FOR ADDITIONS TO THIS PROJECT, OR COMPLETION OF THIS PROJECT WHEN PHASED WITHOUT THE WRITTEN CONSENT OF CSHQA OR ITS AFFILIATES. Copyright ©2011

STAMP: PRELIMINARY NOT FOR CONSTRUCTION

DRAWING TITLE: ROOF FRAMING PLAN

APPROVED: DIVISION CHIEF

APPROVED: SERVICE DIRECTOR

PROJECT TITLE: VAMC ENERGY UPGRADES PHASE ONE BUILDING 33

BUILDING NUMBER: 33 | CHECKED: DH | DRAWN: MG

LOCATION: BOISE, IDAHO

DATE: 03/03/11

PROJECT NO.: 531-10-114

DRAWING NO.: S2.3

DWG. 7 OF 32

DEPARTMENT OF VETERANS AFFAIRS

Username: mgonzale
Mar 07, 2011 - 1:32pm
Q:\2009\09004.6\Struc\02_Drawings\Phase 1 - energy upgrades\09004_33s2.3(phz1).dwg