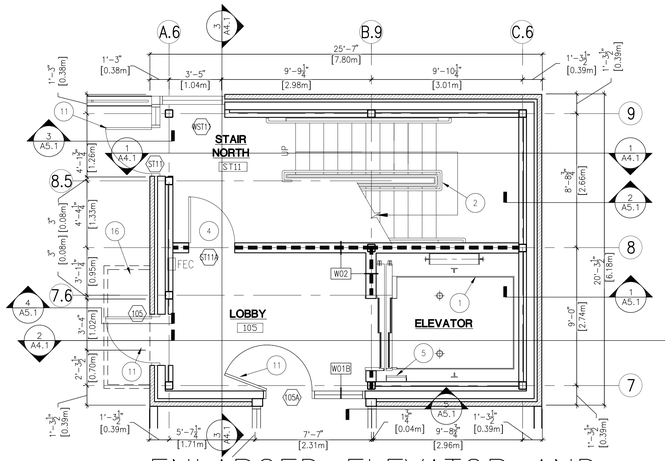

ENLARGED ELEVATOR AND
1 STAIR FLOOR PLAN

0' 4' 8' 12' 16' 20' 24' SCALE: 1/4" = 1'-0"

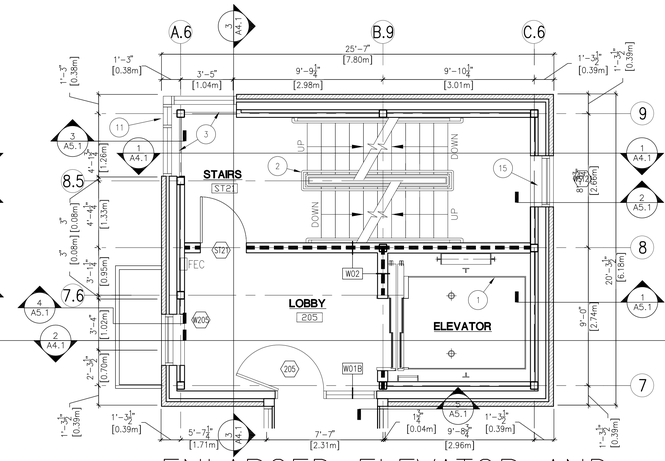

ENLARGED ELEVATOR AND
2 STAIR FLOOR PLAN

0' 4' 8' 12' 16' 20' 24' SCALE: 1/4" = 1'-0"

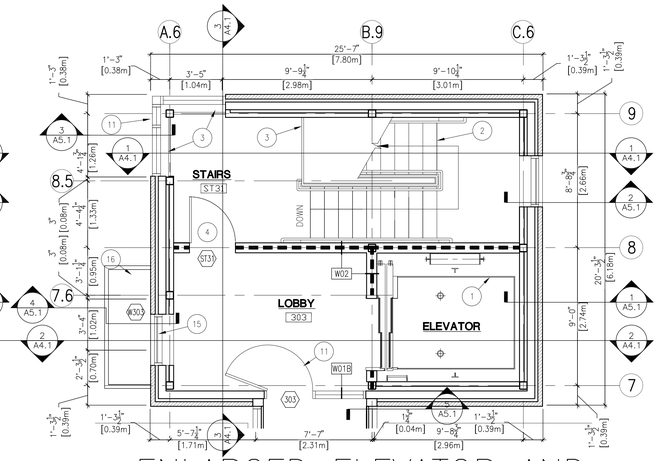

ENLARGED ELEVATOR AND
3 STAIR FLOOR PLAN

0' 4' 8' 12' 16' 20' 24' SCALE: 1/4" = 1'-0"

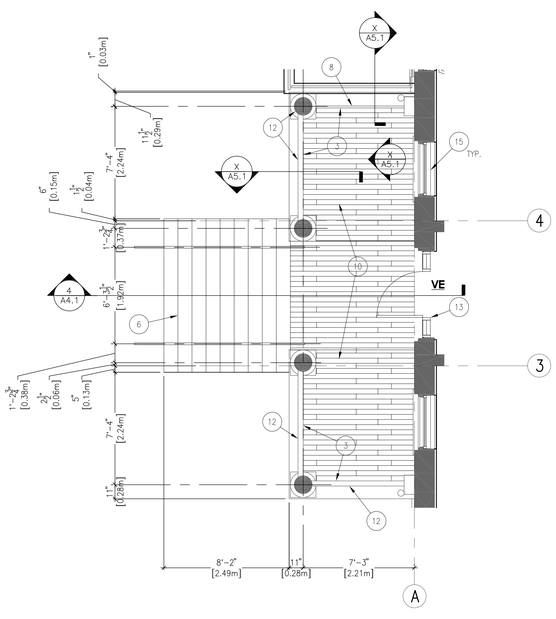

ENLARGED FRONT
4 PORCH & STAIR

0' 4' 8' 12' 16' 20' 24' SCALE: 1/4" = 1'-0"

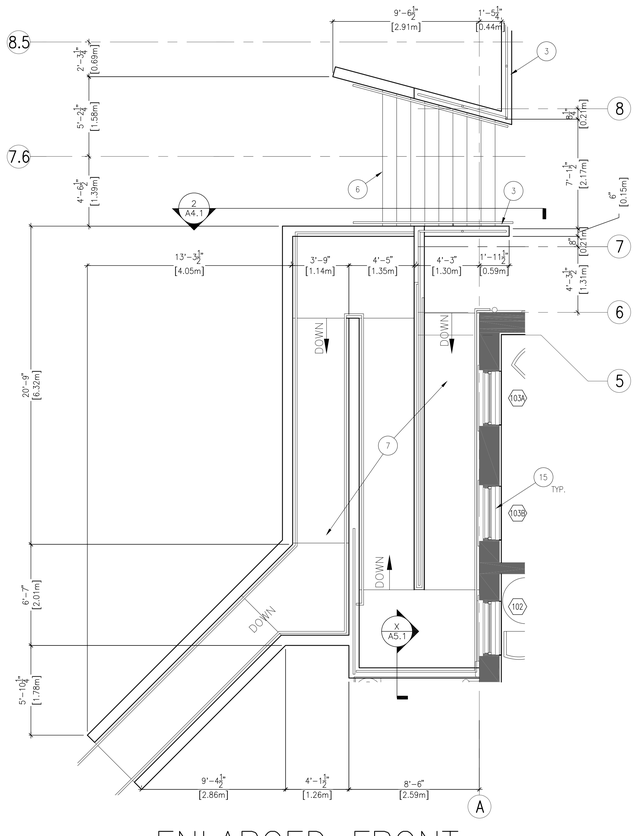

ENLARGED FRONT
5 ADA RAMP

0' 4' 8' 12' 16' 20' 24' SCALE: 1/4" = 1'-0"

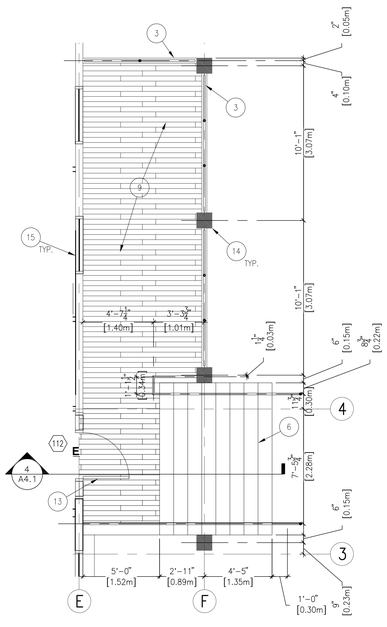

ENLARGED BACK PORCH
6 & STAIR

0' 4' 8' 12' 16' 20' 24' SCALE: 1/4" = 1'-0"

GENERAL NOTES:

A. PARTITION DIMENSIONS ARE GIVEN TO THE FACE OF STUD UNLESS OTHERWISE NOTED.

B. MASONRY DIMENSIONS ARE GIVEN TO FACE OF MASONRY AND TO THE FACE OF ROUGH OPENINGS.

C. DOOR AND WINDOW OPENING LOCATIONS ARE DIMENSIONED TO ROUGH OPENING OR CENTERLINE OF OPENING. COORDINATE WITH DOOR SCHEDULE AND WINDOW TYPES, SHEET A6.2.

D. IF A WALL TYPE IS NOT INDICATED ON A WALL, USE THE TYPICAL WALL TYPE AS NOTED. COORDINATE WITH SHEET A1.1.

E. PROVIDE SOLID WOOD BLOCKING IN WALLS FOR ALL CABINETRY, FIXTURES, DOOR STOPS, AND EQUIPMENT PRIOR TO INSTALLING GYPSUM WALL BOARD.

F. ALL GYPSUM WALL BOARD TO BE TYPE 'X'. PROVIDE MOISTURE RESISTANT GYPSUM BOARD BEHIND CERAMIC WALL TILE, U.O.N.

G. GYPSUM WALL BOARD SHALL EXTEND FULL HEIGHT OF WALL TO UNDERSIDE OF DECK ABOVE UNLESS OTHERWISE NOTED. SEE WALL TYPES.

H. SEE SHEET A6.1 FOR FINISH REQUIREMENTS.

J. SEE A8.1–1 FOR ACCESSORY AND EQUIPMENT MOUNTING HEIGHTS.

K. PROVIDE STAINLESS STEEL FILLER BEHIND ANY MIRRORS AND OTHER WALL MOUNTED ACCESSORIES WHEN ITEM IS INSTALLED PARTIALLY OVER CERAMIC TILE.

SHEET NOTES:

1. NEW GEARLESS TRACTION ELEVATOR.
2. NEW CONCRETE STAIRS W/ PAINTED METAL RAILINGS.
3. NEW PAINTED METAL GUARD RAIL.
4. NEW H.M. DOOR, RE: A6.2.
5. NEW LADDER TO ELEVATOR PIT.
6. NEW CONCRETE STAIRS AND PAINTED METAL HANDRAIL, CW/ CIVIL.
7. NEW CONCRETE ADA COMPLIANT RAMP AND PAINTED METAL HANDRAIL.
8. NEW PAINTED WOOD RAILING SECTION TO MATCH EXISTING RAILINGS.
9. RE-FINISH EXISTING DECKING.
10. NEW TOUNG AND GROOVE WOOD DECKING.
11. NEW ALUMINUM STOREFRONT SYSTEM, RE: A6.2.
12. EXISTING PAINTED WOOD COLUMNS AND RAILINGS TO BE RESTORED, RE: A3.1–A3.8 FOR RESTORATION DRAWINGS.
13. NEW WOOD DOOR, RE: A6.2.
14. EXISTING BRICK COLUMN, RE: A3.1–A3.8 FOR RESTORATION DRAWINGS.
15. NEW METAL CLAD WOOD WINDOW, TYPICAL AT EXISTING BUILDING, RE: A6.2.
16. STEEL CANOPY, RE: A7.2–1,2,3.

95% SUBMISSION

REVISIONS | DATE

CSHQA
C.W. MOORE PLAZA
250 S. 5TH ST. • BOISE, ID 83702
(208) 343-4635 • FAX (208) 343-1858
http://www.cshqa.com

JOHN D. MAULIN, ARCHITECT
C.W. MOORE PLAZA
250 S. 5TH ST
BOISE, IDAHO
PHONE: 208-343-4635 FAX: 208-343-1858

THESE DRAWINGS AND SPECIFICATIONS, AS INSTRUMENTS OF SERVICE, ARE AND SHALL REMAIN THE PROPERTY OF THE ARCHITECT / ENGINEER WHETHER THE PROJECT FOR WHICH THEY ARE MADE IS EXECUTED OR NOT. THESE DRAWINGS AND SPECIFICATIONS ARE NOT TO BE USED BY ANY PERSON OR ENTITY ON OTHER PROJECTS, FOR ADDITIONS TO THIS PROJECT, OR COMPLETION OF THIS PROJECT-WHEN PHASED-WITHOUT THE WRITTEN CONSENT OF CSHQA OR ITS AFFILIATES. Copyright©2011

STAMP
PRELIMINARY
NOT FOR
CONSTRUCTION

DRAWING TITLE: ENLARGED PLANS

PROJECT TITLE: VAMC RENOVATE BUILDING 33

DATE: 03/04/11

PROJECT NO.: 531-10-114

APPROVED: DIVISION CHIEF

BUILDING NUMBER: 33 | CHECKED: JMO | DRAWN: BKS

DRAWING NO.: A1.5

APPROVED: SERVICE DIRECTOR

LOCATION: BOISE, IDAHO

DWG. 19 OF 102

DEPARTMENT OF VETERANS AFFAIRS