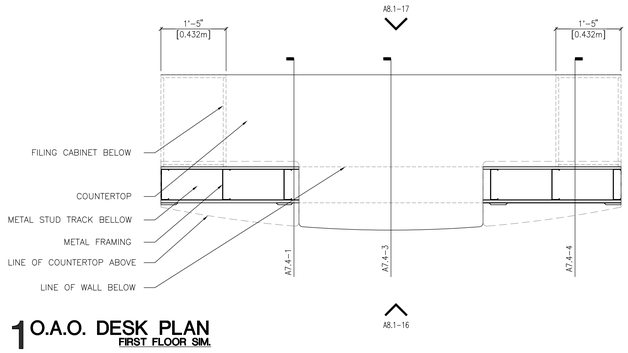

1 O.A.O. DESK PLAN
FIRST FLOOR SIM.

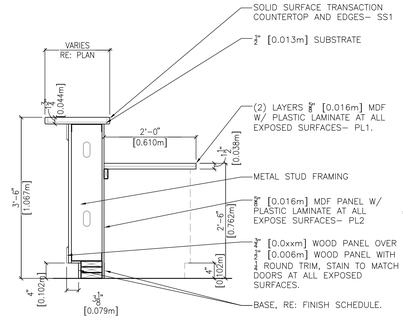

2 O.A.O. DESK
SCALE: 3/4" = 1'-0"

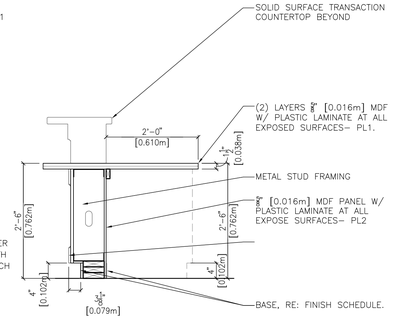

3 O.A.O. DESK
SCALE: 3/4" = 1'-0"

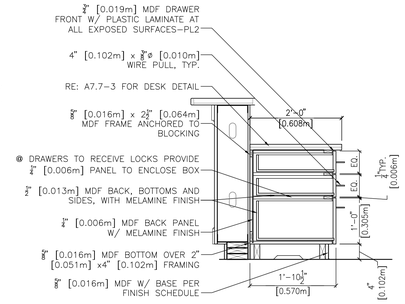

4 O.A.O. 3-DRAWER BASE CABINET
SCALE: 3/4" = 1'-0"

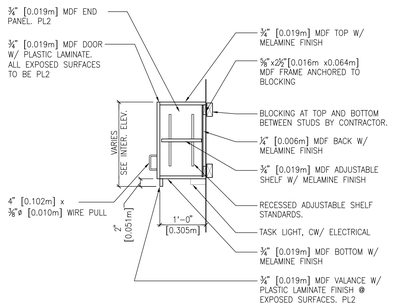

5 UPPER CABINET
SCALE: 3/4" = 1'-0"

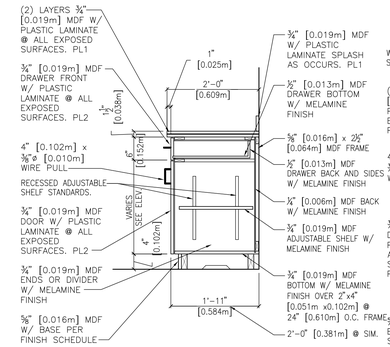

6 DRAWER/ DOOR BASE CABINET
SCALE: 3/4" = 1'-0"

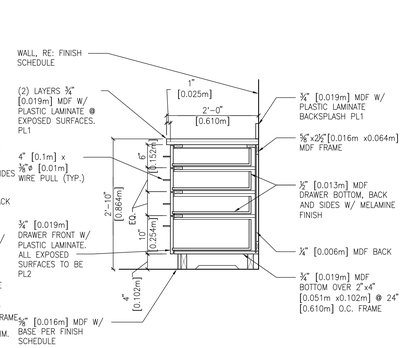

7 4-DRAWER BASE CABINET
SCALE: 3/4" = 1'-0"

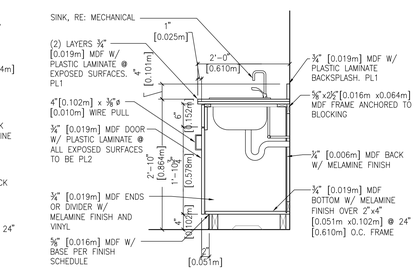

8 BASE CABINET WITH SINK
SCALE: 3/4" = 1'-0"

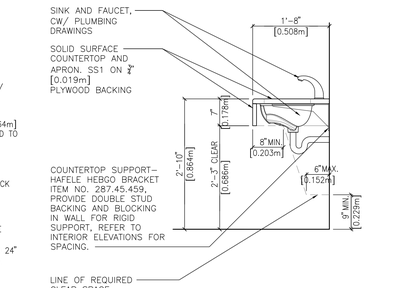

9 COUNTERTOP W/ SINK
SCALE: 3/4" = 1'-0"

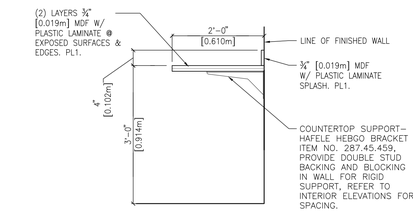

10 COUNTER DETAIL
SCALE: 3/4" = 1'-0"

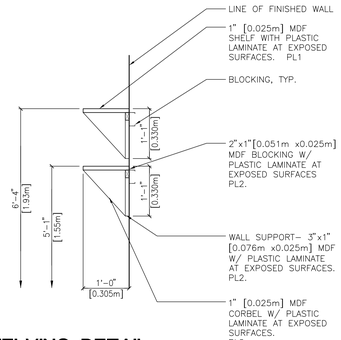

11 SHELVING DETAIL
SCALE: 3/4" = 1'-0"

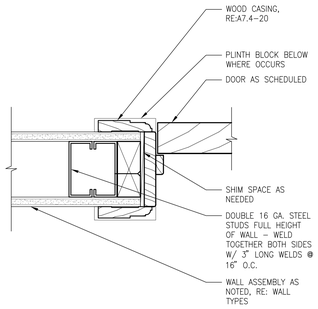

12 WOOD CASING AT JAMB
SCALE: 3"=1'-0"

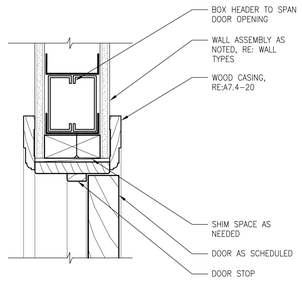

13 WOOD CASING AT HEAD
SCALE: 3"=1'-0"

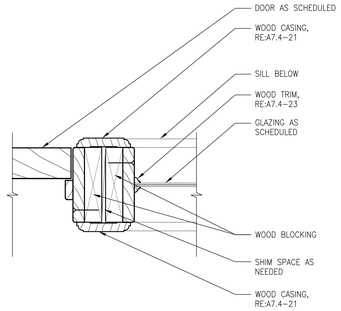

14 JAMB AT DOOR/SIDELIGHT
SCALE: 3"=1'-0"

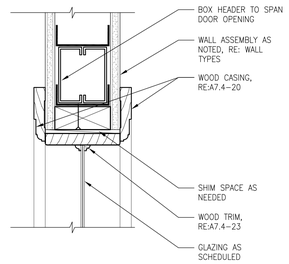

15 HEAD AT SIDELIGHT
SCALE: 3"=1'-0"

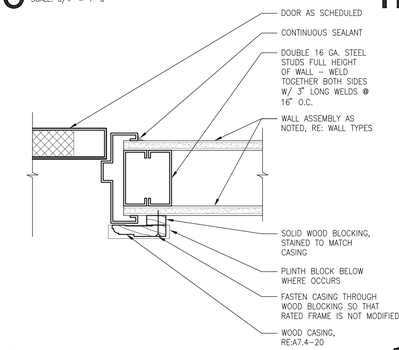

16 WOOD CASING AT HOLLOW METAL FRAME - JAMB
SCALE: 3"=1'-0"

17 WOOD CASING AT HOLLOW METAL FRAME - HEAD
SCALE: 3"=1'-0"

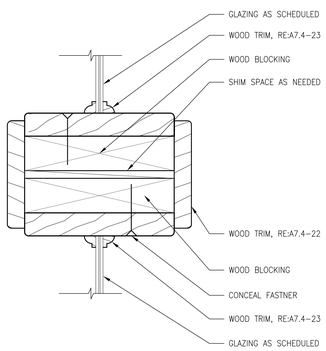

18 MULLION AT SIDELIGHT
SCALE: 6" = 1'-0"

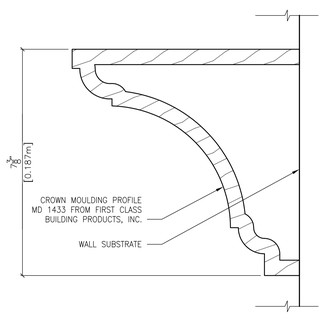

19 CROWN MOULDING PROFILE
SCALE: 6" = 1'-0"

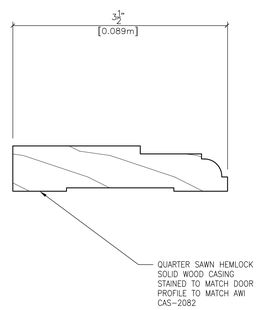

20 WOOD CASING PROFILE
SCALE: 1'-0" = 1'-0"

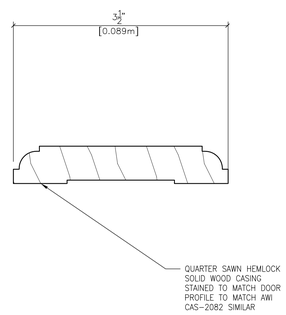

21 WOOD CASING PROFILE
SCALE: 1'-0" = 1'-0"

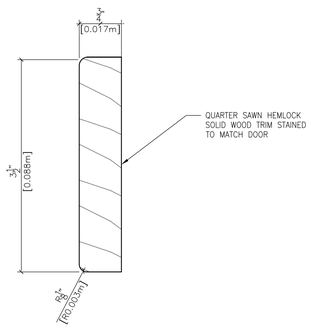

22 WOOD TRIM PROFILE
SCALE: 1'-0" = 1'-0"

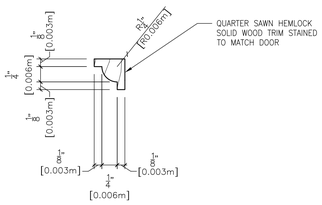

23 WOOD TRIM PROFILE
SCALE: 1'-0" = 1'-0"

95% SUBMISSION

REVISIONS | DATE

CSHQA

C.W. MOORE PLAZA
250 S. 5TH ST. • BOISE, ID 83702
(208) 343-4635 • FAX (208) 343-1858
http://www.cshqa.com

JOHN D. MAULIN, ARCHITECT
C.W. MOORE PLAZA
250 S. 5TH ST
BOISE, IDAHO
PHONE: 208-343-4635 FAX: 208-343-1858

THESE DRAWINGS AND SPECIFICATIONS, AS INSTRUMENTS OF SERVICE, ARE AND SHALL REMAIN THE PROPERTY OF THE ARCHITECT / ENGINEER WHETHER THE PROJECT FOR WHICH THEY ARE MADE IS EXECUTED OR NOT. THESE DRAWINGS AND SPECIFICATIONS SHALL NOT BE USED BY ANY PERSON OR ENTITY ON OTHER PROJECTS, FOR ADDITIONS TO THIS PROJECT, OR COMPLETION OF THIS PROJECT-WHEN PHASED-WITHOUT THE WRITTEN CONSENT OF CSHQA OR ITS AFFILIATES. Copyright ©2011

STAMP
PRELIMINARY NOT FOR CONSTRUCTION

DRAWING TITLE: INTERIOR DETAILS
PROJECT TITLE: VAMC RENOVATE BUILDING 33
DATE: 03/04/11
PROJECT NO.: 531-10-114
APPROVED: DIVISION CHIEF
APPROVED: SERVICE DIRECTOR
BUILDING NUMBER: 33
CHECKED: JMO
DRAWN: BKS
LOCATION: BOISE, IDAHO
DRAWING NO.: A7.4
DWG. 41 OF 102

DEPARTMENT OF VETERANS AFFAIRS