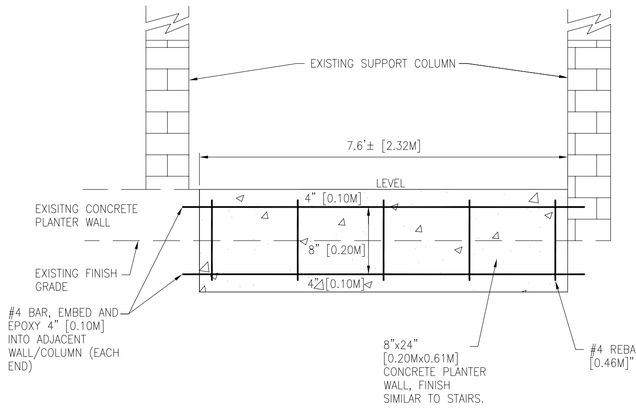

1 PROFILE PLANTER WALL #1
SCALE: NOT TO SCALE

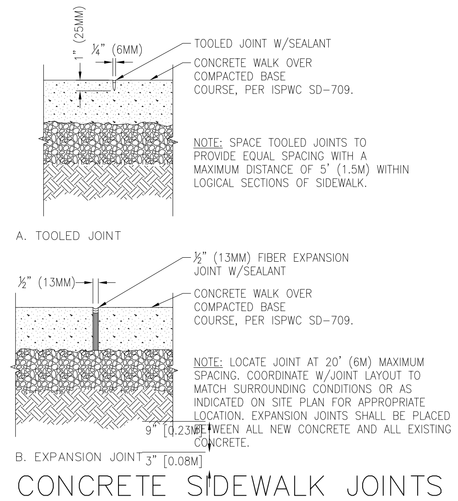

2 CONCRETE SIDEWALK JOINTS
SCALE: NOT TO SCALE

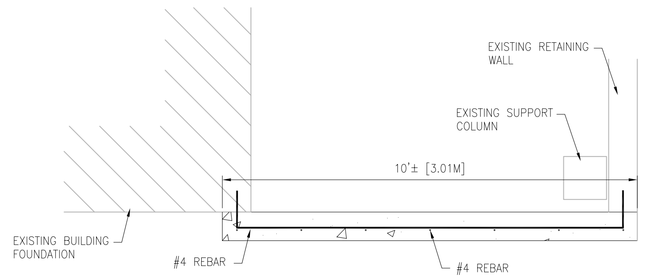

NOTE:
SAME CONSTRUCTION AS PLANTER WALL #1
SEE ALL DETAILS IN C3.0-1

3 PLAN PLANTER WALL #2
SCALE: NOT TO SCALE

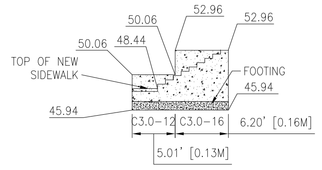

4 STAIR WALL–NORTH
SCALE: 1" = 10'

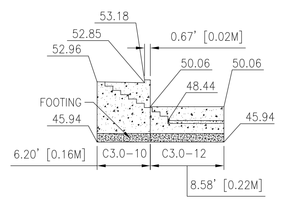

5 STAIR WALL–SOUTH
SCALE: 1"=10'

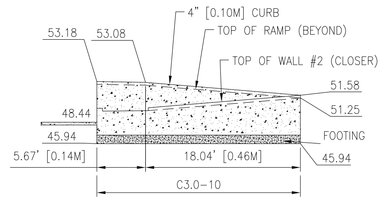

6 RAMP WALL #1
SCALE: 1"=10'

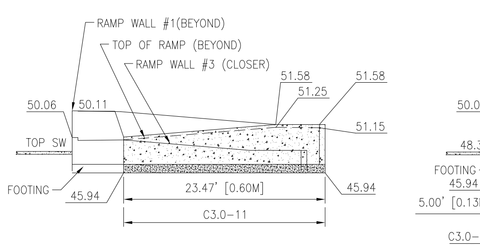

7 RAMP WALL #2
SCALE: 1"=10'

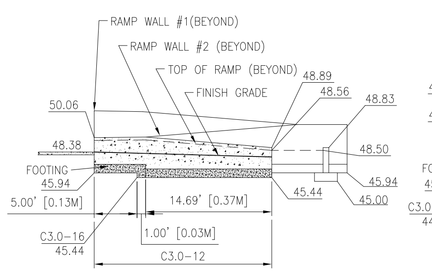

8 RAMP WALL #3
SCALE: 1"=10'

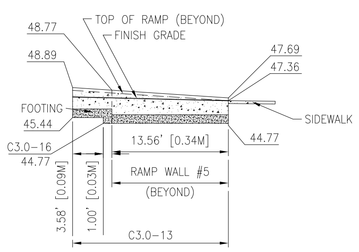

9 RAMP WALL #4 & #5
SCALE: 1"=10'

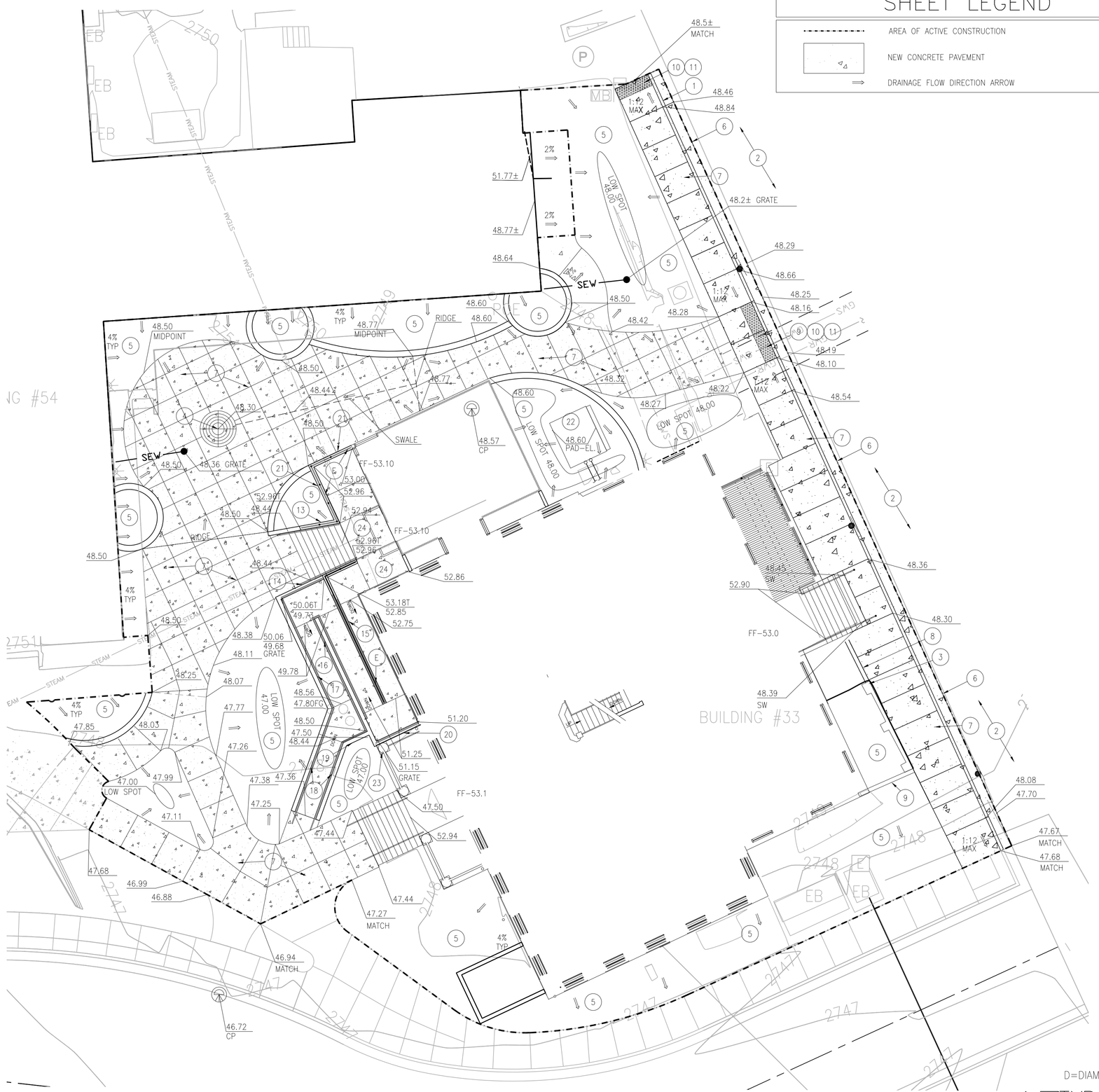

GRADING PLAN
SCALE: 1" = 10'-0"

SHEET LEGEND

- AREA OF ACTIVE CONSTRUCTION
- NEW CONCRETE PAVEMENT
- DRAINAGE FLOW DIRECTION ARROW

GENERAL NOTES:

A. TOPOGRAPHIC SURVEY PROVIDED BY FOX LAND SURVEYING, INC.

B. ACCESS RAMP SHALL BE CONSTRUCTED IN ACCORDANCE WITH ADA GUIDELINES. NO RAMP SHALL EXCEED 12H:1V SLOPE. REFER TO ARCHITECTURAL DRAWINGS FOR DETAILS OF STAIRS AND RAMP.

C. EXPANSION JOINTS SHALL BE INSTALLED BETWEEN ALL NEW CONCRETE AND EXISTING CONCRETE, THIS INCLUDES BUILDING FOUNDATIONS, COLUMNS, CURB AND GUTTER, ETC.

D. 4" [0.10M] OF COMPACTED AGGREGATE BASE SHALL BE PLACED UNDER ALL SIDEWALKS, RETAINING WALLS, RAMPS AND LANDINGS.

E. SAFETY RAILING AND HAND RAILING NOT SHOWN ON WALL DETAILS. RE: ARCHITECTURAL DRAWINGS.

F. RAMP LONGITUDINAL REINFORCEMENT SHALL EXTEND THROUGH THE ADJACENT LANDINGS OR SHALL HAVE APPROPRIATE SPLICES TYING THE LANDING AND RAMP TOGETHER.

SHEET NOTES:

1. CURB TERMINUS, PER ISPWC SD-707.
2. GRADE A 12' TO 15' [3.66M TO 4.57M] WIDE STRIP, ADJACENT TO THE NEW GUTTER, TO MATCH THE GUTTER LIP AND BLEND INTO THE EXISTING GRAVEL PARKING LOT. RECOMPACT TO 95% OF MAXIMUM DENSITY PER ASTHO T-99.
3. PATCH CRACKED CONCRETE ON EXISTING WALL PRIOR TO CONSTRUCTION OF NEW WALL.
4. 6"ø [1.83M] TREE WELL, RE: LANDSCAPE DRAWINGS.
5. PLANTER BEDS, RE: LANDSCAPE DRAWINGS.
6. CURB AND GUTTER, PER ISPWC SD-701.
7. SIDEWALK PER, ISPWC SD-709, RE: C3.0-2 FOR JOINT CONSTRUCTION.
8. RETAINING WALL, RE: C3.0-1.
9. RETAINING WALL, RE: C3.0-3.
10. PEDESTRIAN RAMP, SIMILAR TO ISPWC SD-712G, MID-BLOCK WITHOUT THE RAMP CURB.
11. TRUNCATED WARNING DOMES PER ISPWC SD-712.
12. PEDESTRIAN RAMP, SIMILAR TO ISPWC SD-712D, TYPE "C3", WITHOUT THE CURB RADIUS.
13. RETAINING WALL, RE: C3.0-4.
14. RETAINING WALL, RE: C3.0-5.
15. RETAINING WALL, RE: C3.0-6.
16. RETAINING WALL, RE: C3.0-7.
17. RETAINING WALL, RE: C3.0-8.
18. RETAINING WALL, RE: C3.0-9.
19. RETAINING WALL, RE: C3.0-13.
20. RETAINING WALL, RE: C3.0-14.
21. RETAINING WALL, RE: C3.0-15.
22. MECHANICAL CONCRETE PAD, RE: STRUCTURAL AND MECHANICAL DRAWINGS.
23. EXISTING PORCH ROOF SUPPORT COLUMN. NEW RAMP RETAINING WALL TO BE PLACED AGAINST EXISTING SUPPORT. THERE IS NO INFORMATION REGARDING THE EXISTING FOOTING CONDITION BENEATH THE COLUMN. IT IS ANTICIPATED THAT SOME MODIFICATION OF THE NEW RETAINING WALL FOOTING WILL BE REQUIRED TO ACCOMMODATE THE EXISTING FOOTING. AFTER EXPOSING THE COLUMN FOOTING COORDINATE WITH THE COTR AND STRUCTURAL ENGINEER TO DETERMINE THE MODIFICATIONS REQUIRED. THERE SHALL BE NO ADDITIONAL CHARGE FOR THIS MODIFICATION.
24. CONCRETE PORCH, 4" [102mm] WITH #3 REBAR @ 16" [406mm] O.C. E.W.

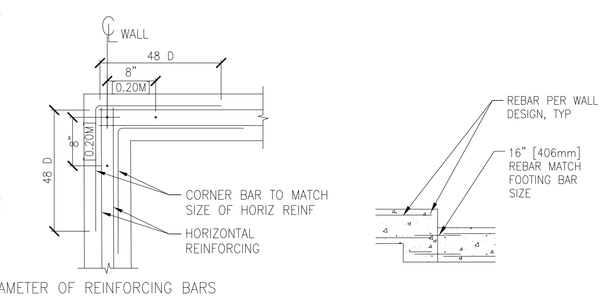

17 TYP CORNER REINFORCING
SCALE: NOT TO SCALE

18 FOOTING STEP
SCALE: NOT TO SCALE

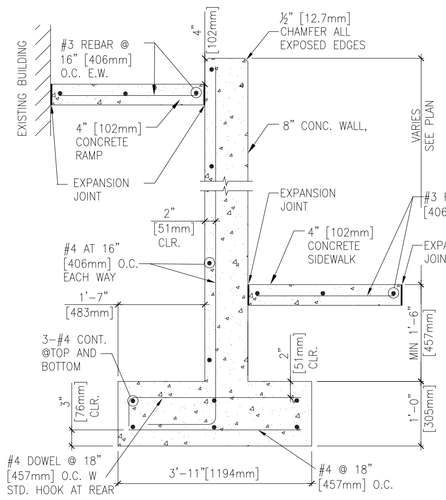

10 RETAINING WALL
SCALE: NOT TO SCALE

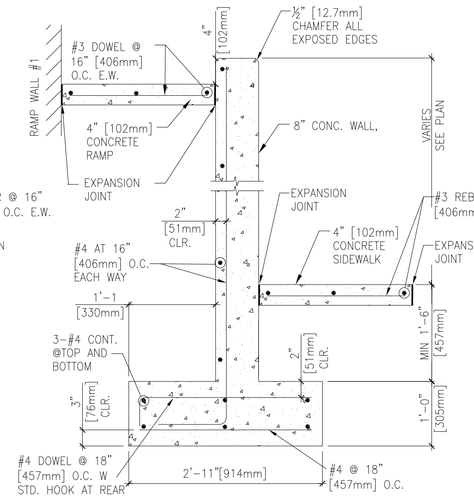

11 RETAINING WALL
SCALE: NOT TO SCALE

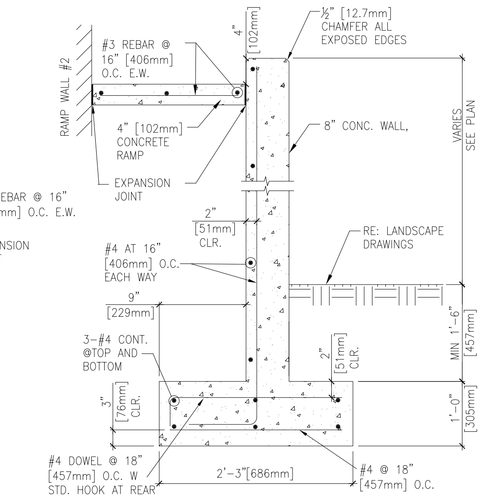

12 RETAINING WALL
SCALE: NOT TO SCALE

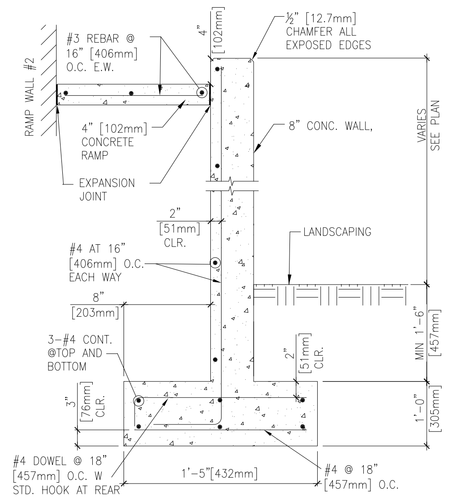

13 RETAINING WALL
SCALE: NOT TO SCALE

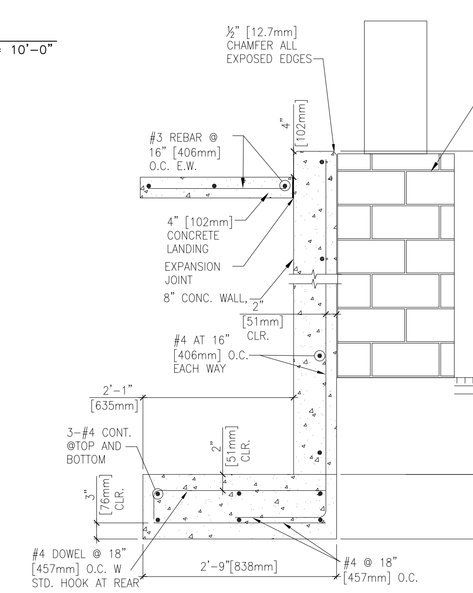

14 RETAINING WALL
SCALE: NOT TO SCALE

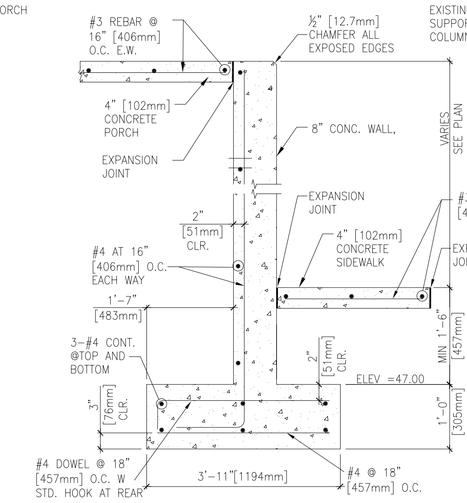

15 RETAINING WALL
SCALE: NOT TO SCALE

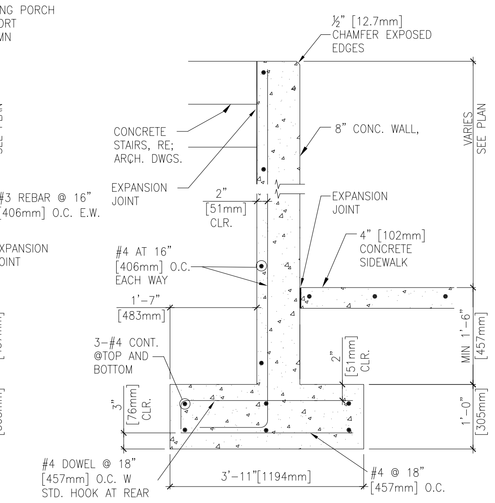

16 RETAINING WALL
SCALE: NOT TO SCALE

95% SUBMISSION

REVISIONS | DATE

CSHQA

C.W. MOORE PLAZA
250 S. 5TH ST. · BOISE, ID 83702
(208) 343-4635 · FAX (208) 343-1858
http://www.cshqa.com

C.W. MOORE PLAZA
250 S. 5TH ST
BOISE, IDAHO
PHONE: 208-343-4635 FAX: 208-343-1858

THESE DRAWINGS AND SPECIFICATIONS, AS INSTRUMENTS OF SERVICE, ARE AND SHALL REMAIN THE PROPERTY OF THE ARCHITECT / ENGINEER WHETHER THE PROJECT FOR WHICH THEY ARE MADE IS EXECUTED OR NOT. THESE DRAWINGS AND SPECIFICATIONS SHALL NOT BE USED BY ANY PERSON OR ENTITY ON OTHER PROJECTS, FOR ADDITIONS TO THIS PROJECT, OR COMPLETION OF THIS PROJECT WHEN PHASED WITHOUT THE WRITTEN CONSENT OF CSHQA OR ITS AFFILIATES. Copyright ©2011

STAMP

PRELIMINARY
NOT FOR
CONSTRUCTION

DRAWING TITLE	GRADING PLAN
PROJECT TITLE	VAMC RENOVATE BUILDING 33
DATE	03/04/11
PROJECT NO.	531-10-114
APPROVED: DIVISION CHIEF	
APPROVED: SERVICE DIRECTOR	
BUILDING NUMBER	33
CHECKED	JDG
DRAWN	JDG
LOCATION	BOISE, IDAHO
DRAWING NO.	C3.0
DWG. OF	

DEPARTMENT OF VETERANS AFFAIRS

Username: jgerroud
Mar 03, 2011 - 1:41pm
Q:\2009\09004.6\Civil\02_Drawings\9516 3-4-11\SITEGRAD.dwg