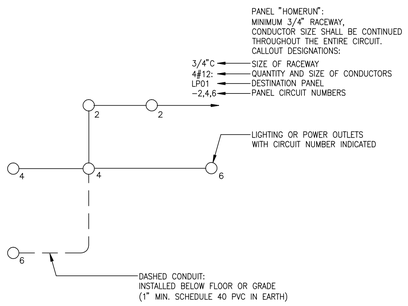

NOTES:
1. ALL HOMERUNS ARE TO BE 3/4" CONDUIT MINIMUM.
2. ALL CONDUCTORS SHALL BE #12 UNLESS OTHERWISE NOTED.
3. ALL CONDUITS SHALL CONTAIN A GROUND CONDUCTOR SIZED PER NEC.
4. EACH ISOLATED GROUND CIRCUIT SHALL HAVE A DEDICATED NEUTRAL.

1 CIRCUITING SYMBOLS
NTS

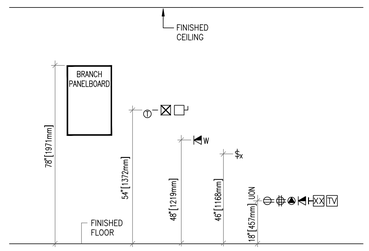

NOTES:
1. VERIFY ALL MOUNTING HEIGHTS WITH CABO/ANSI A117.1, U.F.A.S. REQUIREMENTS AND ALL OTHER APPLICABLE CODES.
2. COORDINATE MOUNTING HEIGHTS WITH ALL ARCHITECTURAL PLANS, ELEVATIONS AND DETAILS PRIOR TO ROUGH-IN. INFORM ARCHITECT OF ANY CONFLICTS.

2 STANDARD MOUNTING HEIGHTS
NTS

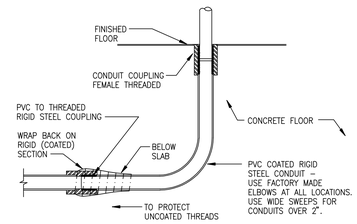

3 BELOW GRADE CONDUIT
NTS

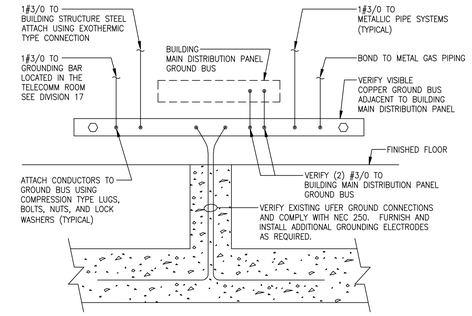

NOTES:
1. ALL GROUNDING AND BONDING CONDUCTORS SHALL BE IN ACCORDANCE WITH NEC 250.
2. VERIFY EXISTING BONDING JUMPER AT SERVICE ENTRANCE EQUIPMENT PDS-33 AND MAKE CONNECTION PER NEC. FEEDER TO BUILDING 33, FROM SERVICE EQUIPMENT SHALL CONTAIN AN EQUIPMENT GROUNDING CONDUCTOR. COMPLY WITH NEC 250.32(B) FOR SEPARATE STRUCTURES. SEE SINGLE-LINE FOR REQUIREMENTS.

4 GROUNDING DETAIL
NTS

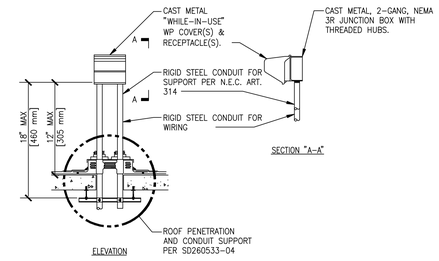

5 RECEPTACLE ROOF MOUNTING DETAIL
NTS

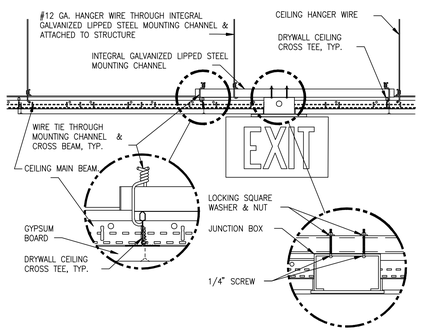

8 EXIT SIGN MOUNTING - GYPBOARD CEILING
NTS

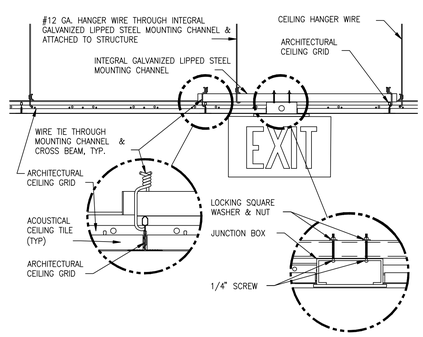

9 EXIT SIGN MOUNTING - LAY-IN CEILING
NTS

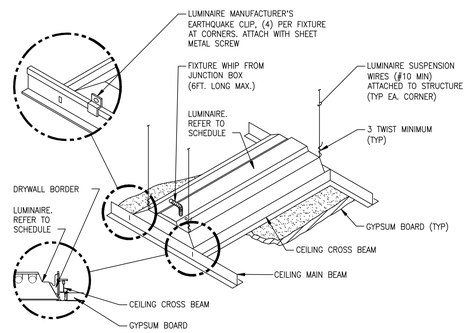

10 LUMINAIRE MOUNTING - GYPBOARD CEILING
NTS

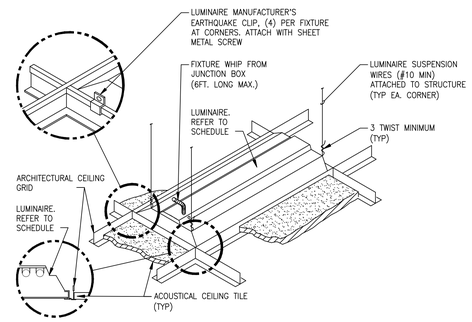

11 LUMINAIRE MOUNTING - LAY-IN CEILING
NTS

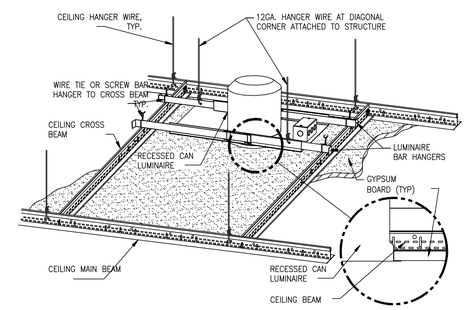

12 DOWNLIGHT MOUNTING - GYPBOARD CEILING
NTS

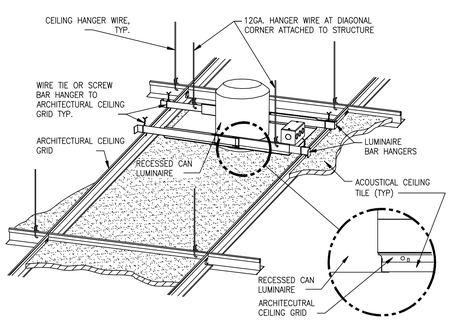

13 DOWNLIGHT MOUNTING - LAY-IN CEILING
NTS

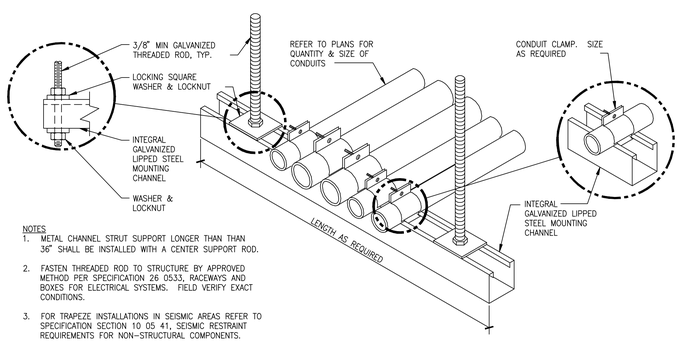

NOTES
1. METAL CHANNEL STRUT SUPPORT LONGER THAN THAN 36" SHALL BE INSTALLED WITH A CENTER SUPPORT ROD.
2. FASTEN THREADED ROD TO STRUCTURE BY APPROVED METHOD PER SPECIFICATION 26 0533, RACEWAYS AND BOXES FOR ELECTRICAL SYSTEMS. FIELD VERIFY EXACT CONDITIONS.
3. FOR TRAPEZE INSTALLATIONS IN SEISMIC AREAS REFER TO SPECIFICATION SECTION 10 05 41, SEISMIC RESTRAINT REQUIREMENTS FOR NON-STRUCTURAL COMPONENTS.

14 CONDUIT TRAPEZE MOUNTING DETAIL
NTS

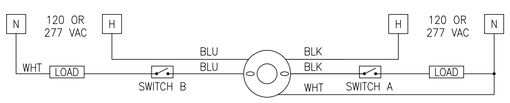

NOTE: LIGHT SWITCH SHALL OVERRIDE OCCUPANCY SENSOR.

15 OCCUPANCY SENSOR BI-LEVEL SWITCHING WIRING DETAIL
NTS

95% SUBMISSION

REVISIONS | DATE

CSHQA
C.W. MOORE PLAZA
250 S. 5TH ST. • BOISE, ID 83702
(208) 343-4635 • FAX (208) 343-1858
http://www.cshqa.com

C.W. MOORE PLAZA
250 S. 5TH ST
BOISE, IDAHO
PHONE: 208-343-4635 FAX: 208-343-1858

THESE DRAWINGS AND SPECIFICATIONS, AS INSTRUMENTS OF SERVICE, ARE AND SHALL REMAIN THE PROPERTY OF THE ARCHITECT / ENGINEER WHETHER THE PROJECT FOR WHICH THEY ARE MADE IS EXECUTED OR NOT. THESE DRAWINGS AND SPECIFICATIONS SHALL NOT BE USED BY ANY PERSON OR ENTITY ON OTHER PROJECTS, FOR ADDITIONS TO THIS PROJECT, OR COMPLETION OF THIS PROJECT WHEN PHASED WITHOUT THE WRITTEN CONSENT OF CSHQA OR ITS AFFILIATES. Copyright •2011

STAMP

DRAWING TITLE: ELECTRICAL DETAILS	PROJECT TITLE: VAMC RENOVATE BUILDING 33		DATE: 03/04/11
APPROVED: DIVISION CHIEF	BUILDING NUMBER: 33	CHECKED: AKD	DRAWN: CRP	PROJECT NO.: 531-10-114
APPROVED: SERVICE DIRECTOR	LOCATION: BOISE, IDAHO		DRAWING NO.: E4.1 DWG. 96 OF 102

DEPARTMENT OF VETERANS AFFAIRS

Usersmarr.dgn
Mar 08, 2011 - 11:00am
Q:\2009\09004.6\Phase 2 - Renovations\Elec\02_Drawings\E41.dwg