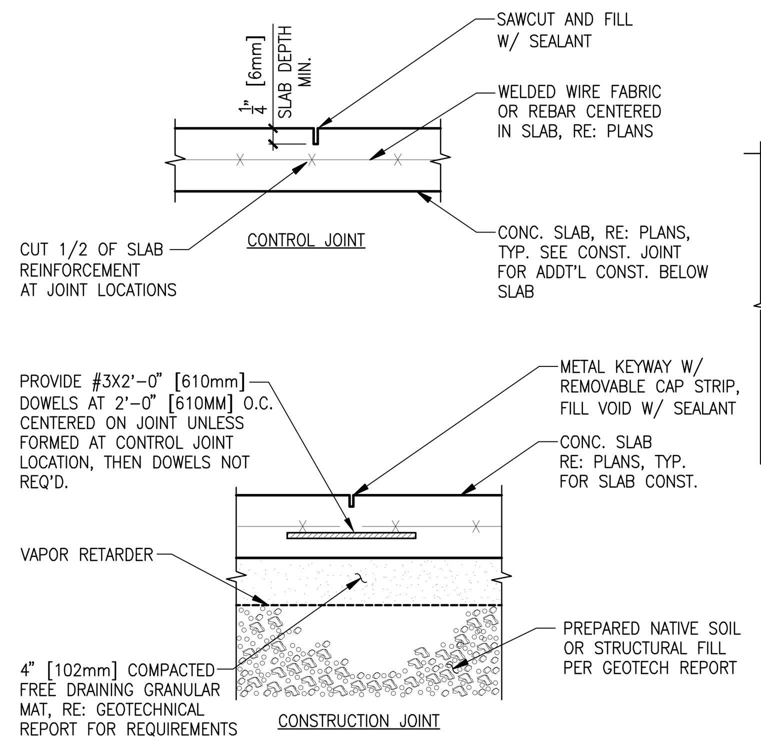

1 SLAB ON GRADE CONSTR.
SCALE: 1 1/2" = 1'-0"

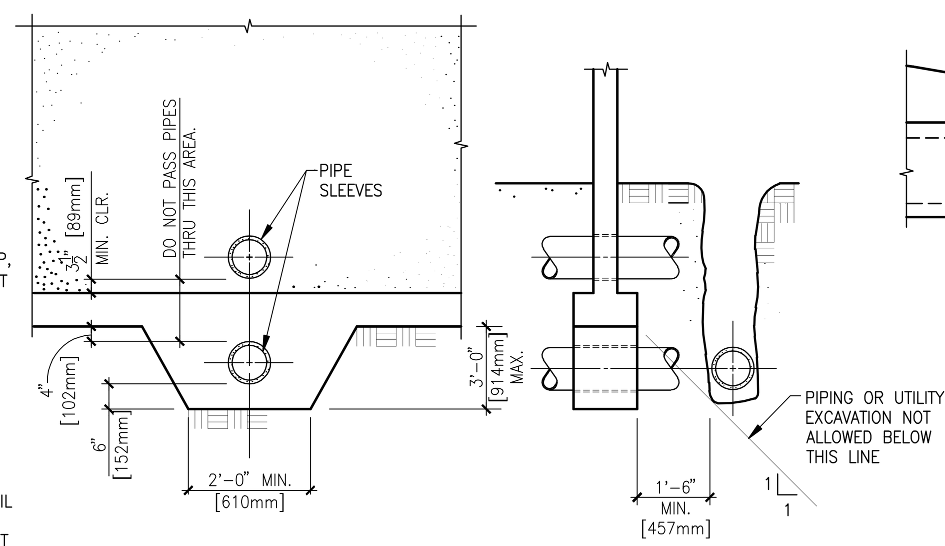

2 TYP. FOOTING PENETRATION
SCALE: 3/4" = 1'-0"

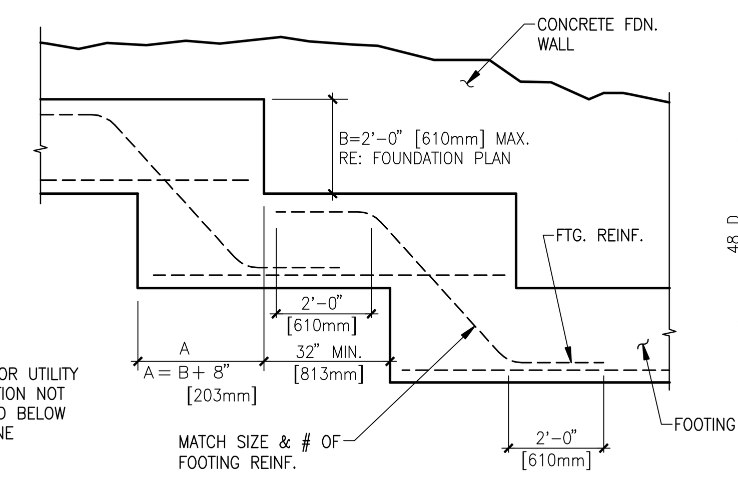

3 STEPPED FTG. DETAIL
SCALE: 3/4" = 1'-0"

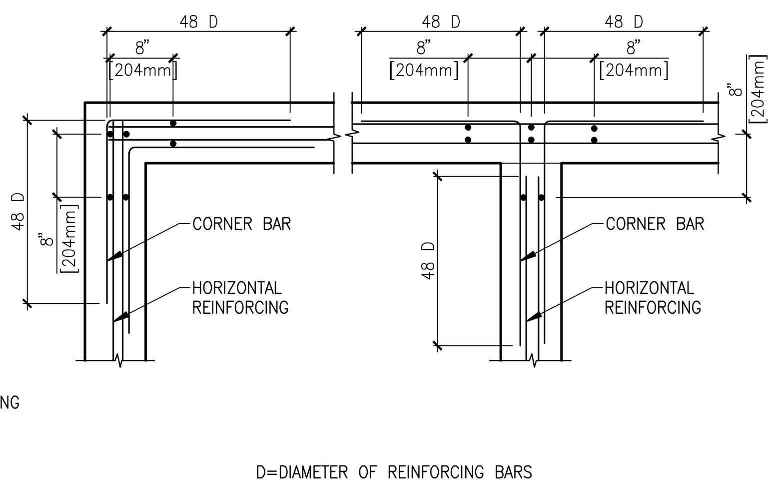

4 TYP. CORNER REINF. CAST-IN-PLACE CONC.
SCALE: 3/4" = 1'-0"

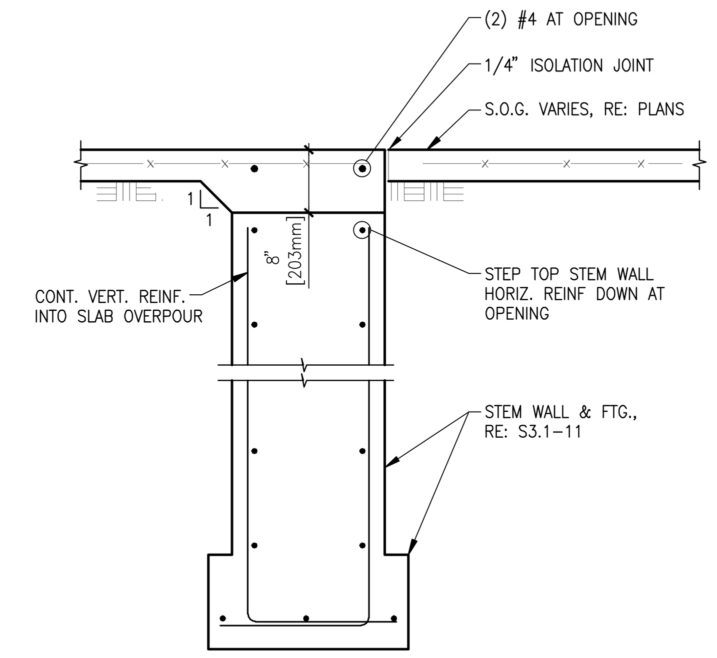

5 FOOTING DETAIL
SCALE: 3/4" = 1'-0"

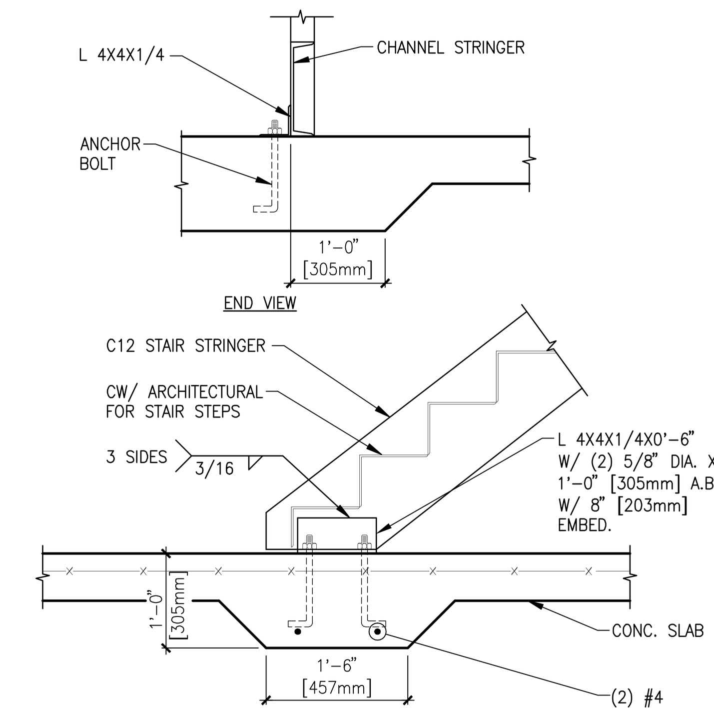

6 THICKEN SLAB AT STAIR LANDING
SCALE: 3/4" = 1'-0"

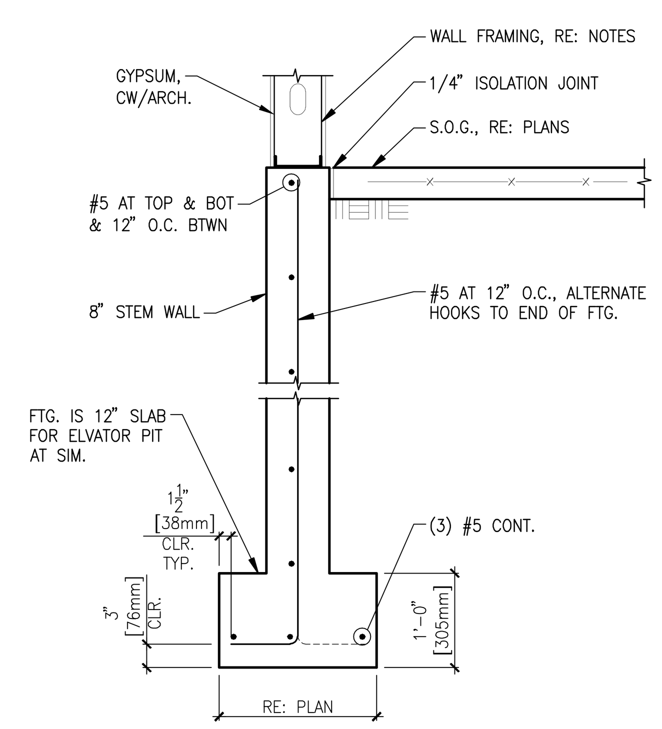

7 FOOTING DETAIL
SCALE: 3/4" = 1'-0"

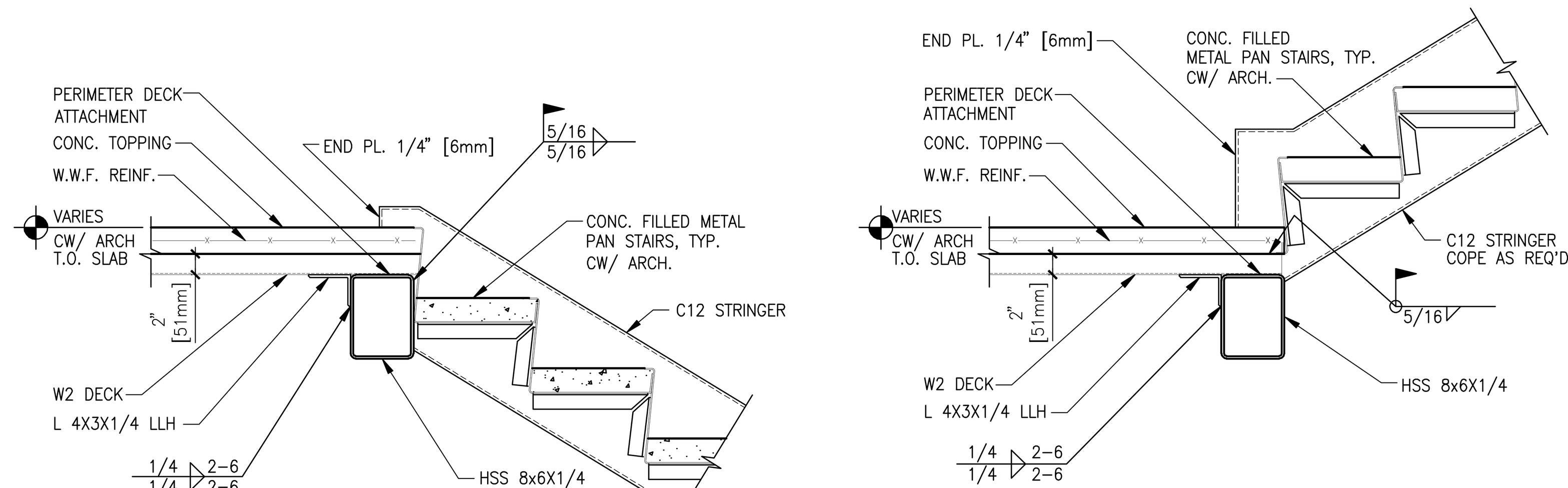

NOTE:
PROVIDE 1/4" [6mm] PLATE WELDED TO TOP OF BEAM BTWN STRINGERS FOR CONC. TOPPING POUR STOP.

8 TYPICAL STRINGER TO BEAMS
SCALE: 1" = 1'-0"

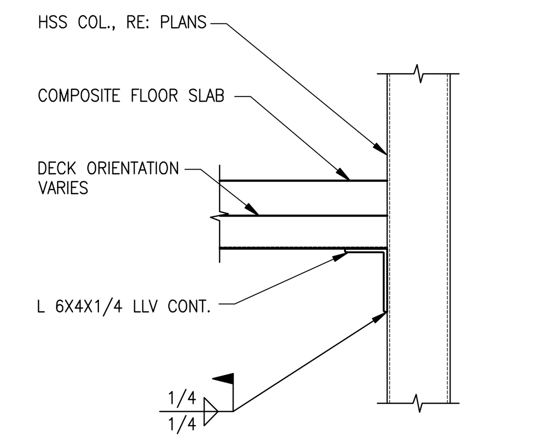

9 FRAMING DETAIL
SCALE: 1" = 1'-0"

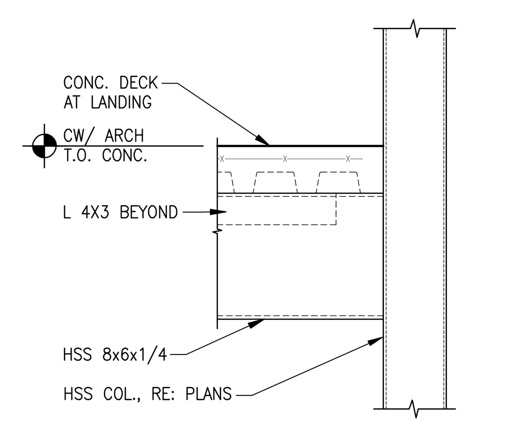

NOTE: RE: S3.2-2 FOR BEAM TO COLUMN CONNECTION.

10 FRAMING DETAIL
SCALE: 1" = 1'-0"

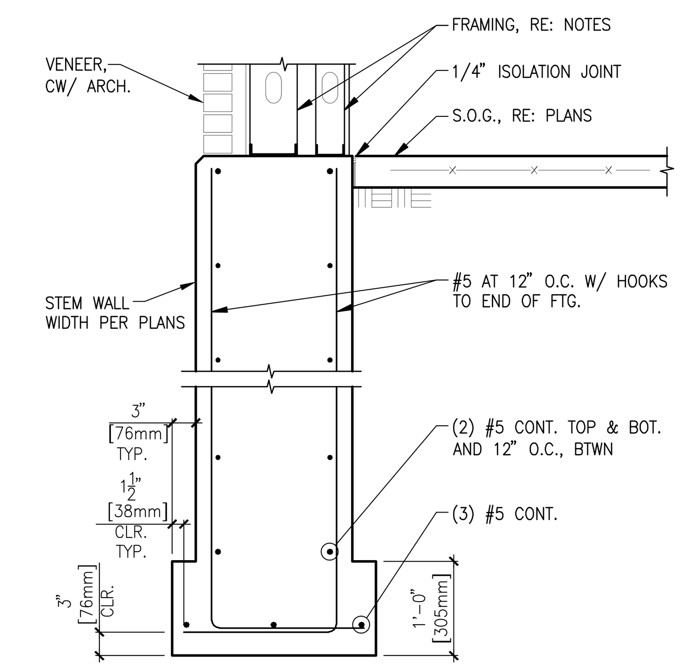

11 FOOTING DETAIL
SCALE: 3/4" = 1'-0"

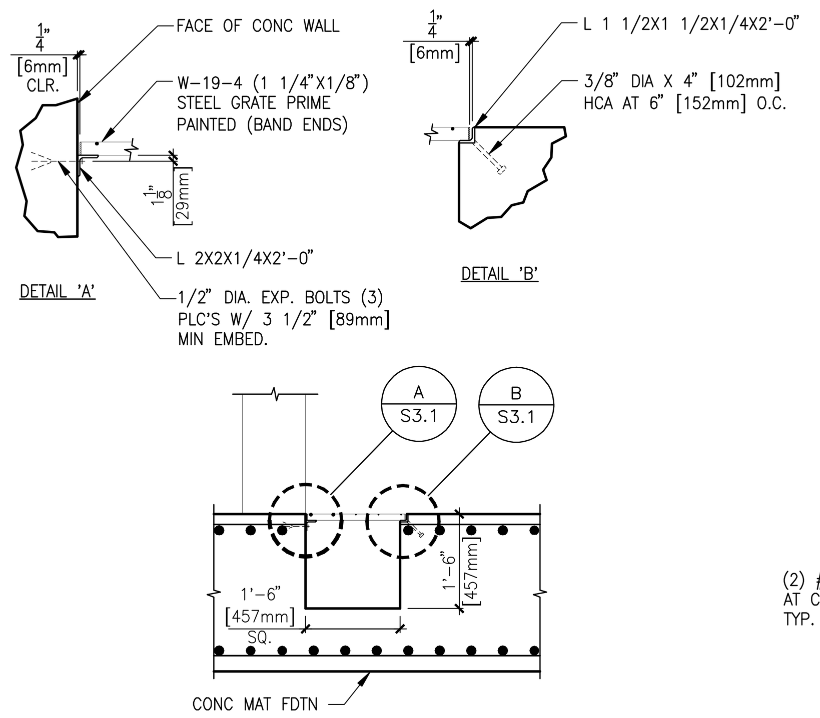

12 ELEVATOR PIT SUMP BASIN
SCALE: 1/2" = 1'-0"

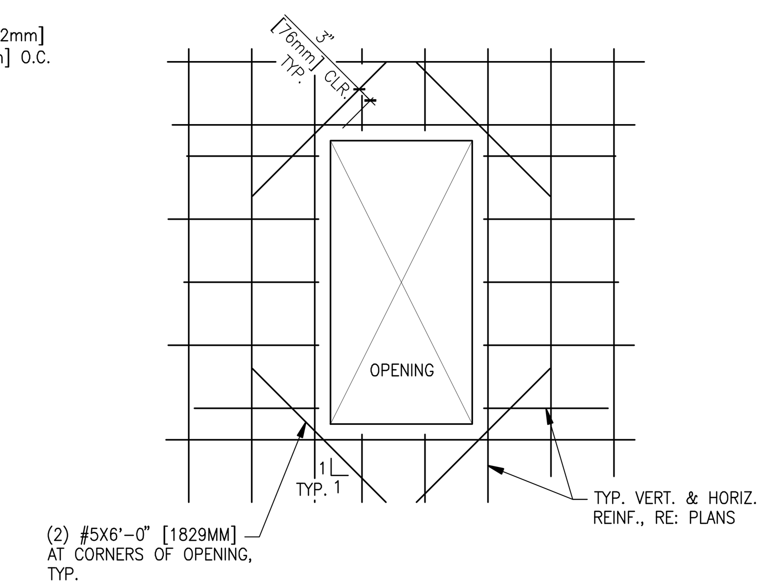

13 REINFORCING DETAIL
SCALE: 1/2" = 1'-0"

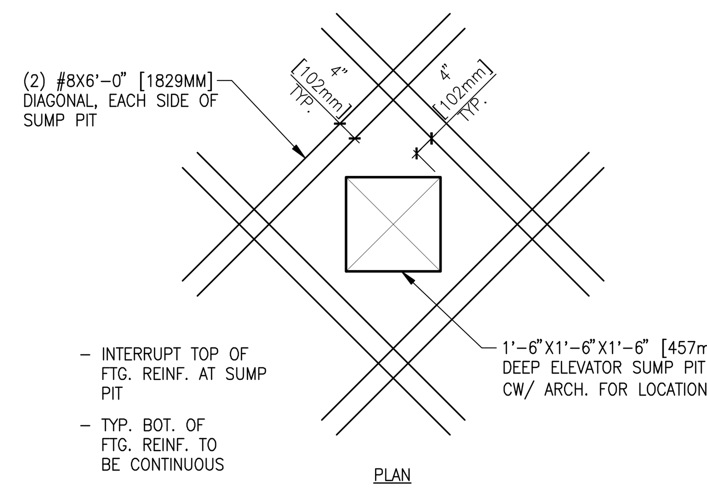

14 REINFORCING DETAIL
SCALE: 1/2" = 1'-0"

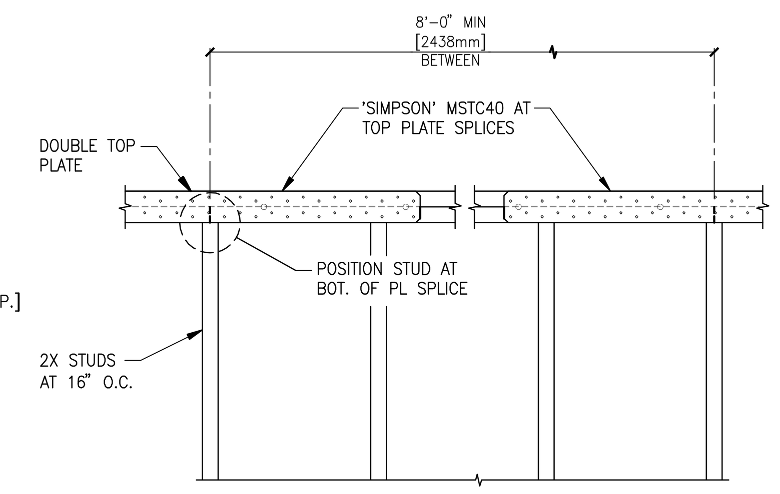

15 FRAMING DETAIL
SCALE: 1" = 1'-0"

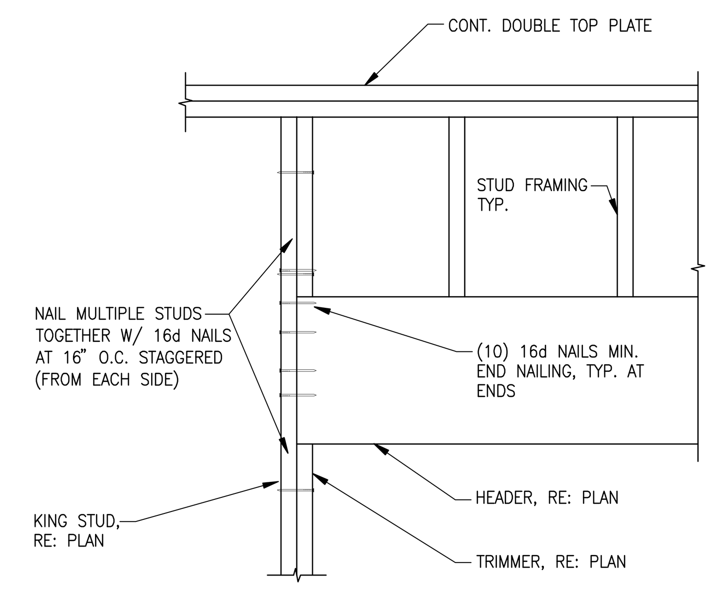

16 FRAMING DETAIL
SCALE: 1" = 1'-0"

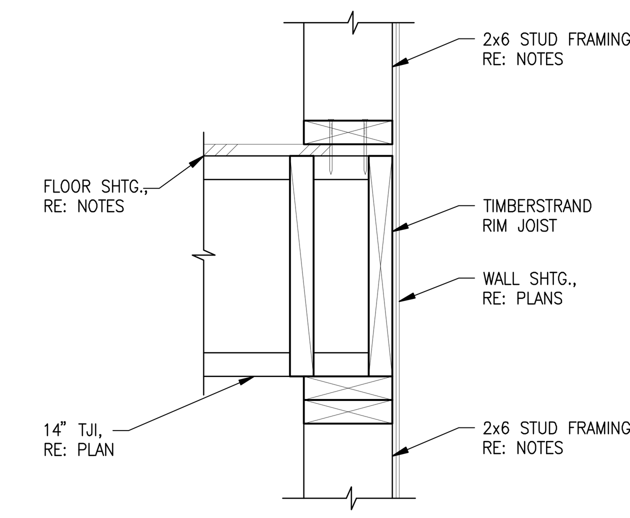

17 FRAMING DETAIL
SCALE: 1 1/2" = 1'-0"

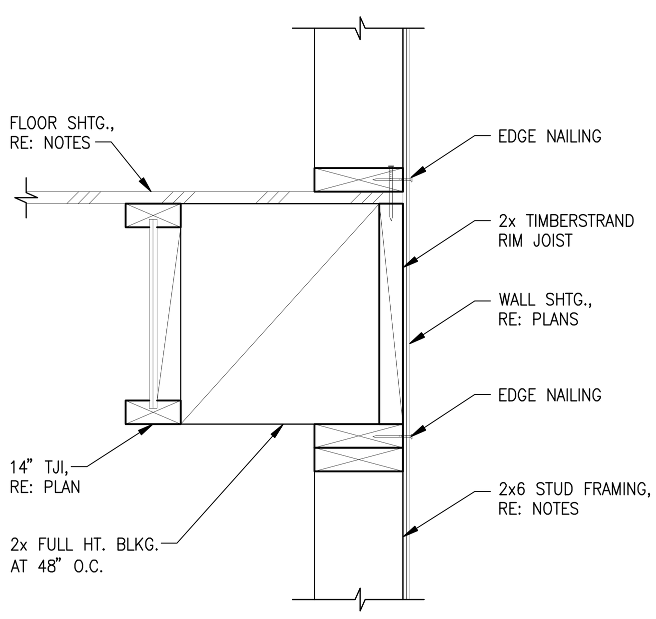

18 FRAMING DETAIL
SCALE: 1 1/2" = 1'-0"

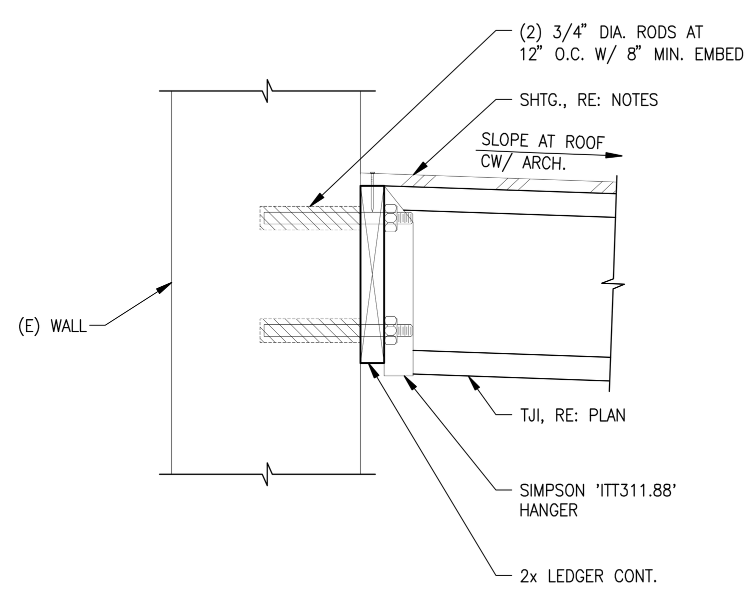

19 FRAMING DETAIL
SCALE: 1 1/2" = 1'-0"

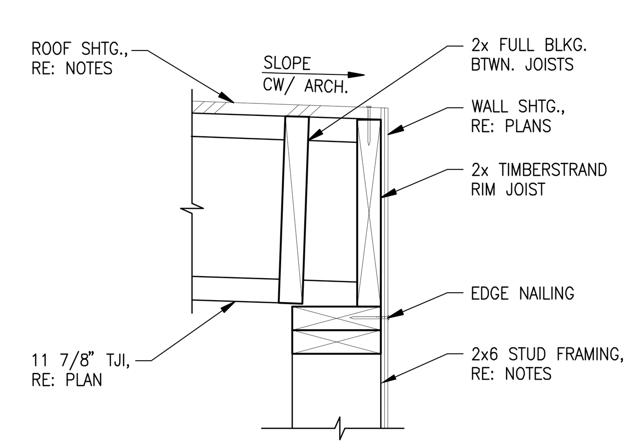

20 FRAMING DETAIL
SCALE: 1 1/2" = 1'-0"

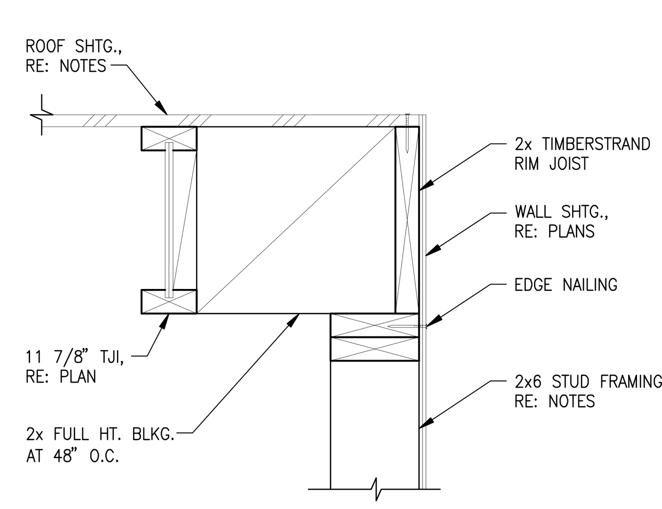

21 FRAMING DETAIL
SCALE: 1 1/2" = 1'-0"

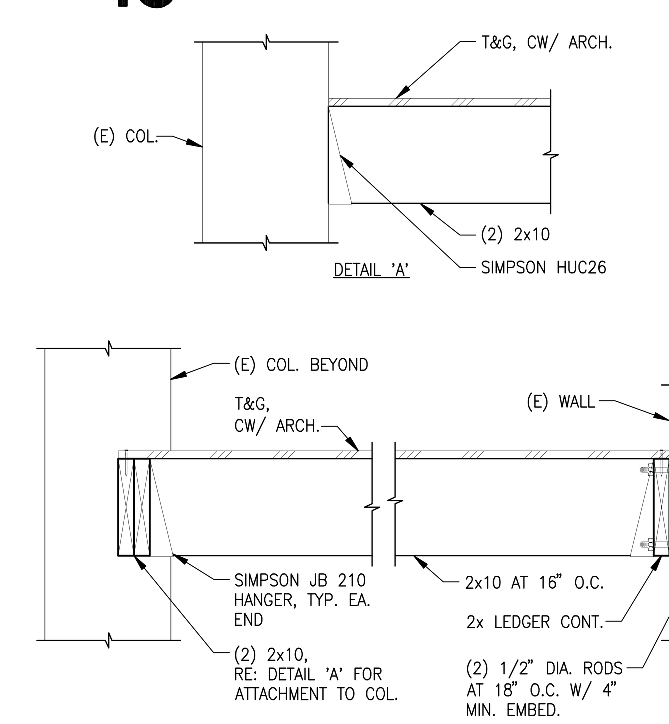

22 PORCH FRAMING DETAIL
SCALE: 1" = 1'-0"

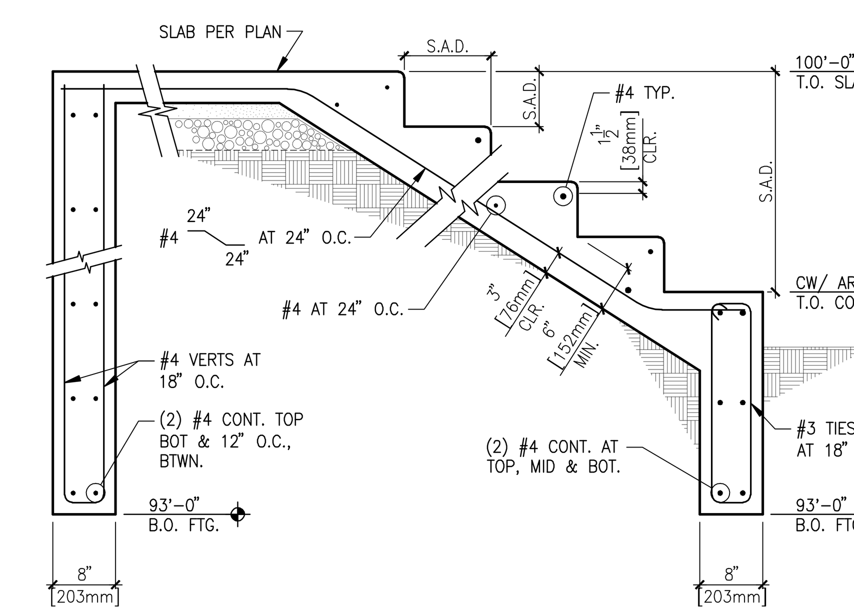

23 STAIR DETAIL W/ LANDING
SCALE: 3/4" = 1'-0"

Username: mgonzale
Mar 07, 2011 - 1:41pm
Q:\2009\09004.6\Struc\02_Drawings\Phase 2 - renovations\09004_33s3.1(phz2).dwg

95% SUBMISSION

REVISIONS	DATE

CSHQA
C.W. MOORE PLAZA
250 S. 5TH ST. • BOISE, ID 83702
(208) 343-4635 • FAX (208) 343-1858
http://www.cshqa.com

DANA M. HENNIS, P.E.
C.W. MOORE PLAZA
250 S. 5TH ST
BOISE, IDAHO
PHONE: 208-343-4635 FAX: 208-343-1858

THESE DRAWINGS AND SPECIFICATIONS, AS INSTRUMENTS OF SERVICE, ARE AND SHALL REMAIN THE PROPERTY OF THE ARCHITECT / ENGINEER WHETHER THE PROJECT FOR WHICH THEY ARE MADE IS EXECUTED OR NOT. THESE DRAWINGS AND SPECIFICATIONS SHALL NOT BE USED BY ANY PERSON OR ENTITY ON OTHER PROJECTS, FOR ADDITIONS TO THIS PROJECT, OR COMPLETION OF THIS PROJECT-WHEN PHASED-WITHOUT THE WRITTEN CONSENT OF CSHQA OR ITS AFFILIATES. Copyright ©2011

STAMP
PRELIMINARY
NOT FOR
CONSTRUCTION

DRAWING TITLE	PROJECT TITLE	DATE
STRUCTURAL DETAILS	VAMC RENOVATE BUILDING 33	03/04/11
		PROJECT NO. 531-10-114
APPROVED: DIVISION CHIEF	BUILDING NUMBER 33 / CHECKED BA / DRAWN MG	DRAWING NO. S3.1
APPROVED: SERVICE DIRECTOR	LOCATION BOISE, IDAHO	DWG. 52 OF 102

DEPARTMENT OF VETERANS AFFAIRS